HIMACHAL TOURISM
Unforgettable Himachal

Himachal Pradesh Tourism Development Board
Department of Tourism and Civil Aviation, Government of Himachal Pradesh

Infrastructure Development Investment Program for Tourism (Project 3)

ADB Loan No. 3223–IND

Bidding Document
for

Procurement of

"Creation of Tourist Cultural Centre, Janjehli, District Mandi"

(Following ADB's Single Stage - Two Envelope Bidding Procedure)

Volume 1-Technical Bid

Issued on **: 16/04/2018**
Invitation for Bids No. **:** IDIPT-HP/P3/NCB/2018-19/01
NCB No. **: HPTDB/15/2**

Employer **: Himachal Pradesh Tourism Development Board (HPTDB)**
Represented by:
The Project Director
Infrastructure Development Investment Program for Tourism
State of Himachal Pradesh
Himachal Pradesh Tourism Development Board (HPTDB)

Country **: India**

Blank Page

Preface

This Bidding Document for Procurement of Works has been prepared by Himachal Pradesh Tourism Development Board, Department of Tourism and Civil Aviation and is based on the Standard Bidding Document for “Procurement of Works, Small Contracts” issued by the Asian Development Bank.

ADB’s *SBD Works-Small* has the structure and the provisions of the Master Procurement Document entitled “Bidding Documents for the Procurement of Works–Small Contracts”, prepared by multilateral development banks and other public international financial institutions except where ADB-specific considerations have required a change.

Blank Page

Table of Contents

PART I BIDDING PROCEDURES

Section 1 - Instructions to Bidders (ITB) ---------- 1-1
This Section specifies the procedures to be followed by Bidders in the preparation and submission of their Bids. Information is also provided on the submission, opening, and evaluation of bids and on the award of contract.

Section 2 - Bid Data Sheet (BDS) ---------- 2-1
This Section consists of provisions that are specific to each procurement and supplement the information or requirements included in Section 1 - Instructions to Bidders.

Section 3 - Evaluation and Qualification Criteria (EQC) ---------- 3-1
This Section contains the criteria to determine the lowest evaluated bid and the qualifications of the Bidder to perform the contract.

Section 4 - Bidding Forms (BDF) ---------- 4-1
This Section contains the forms which are to be completed by the Bidder and submitted as part of his Bid.

Section 5 - Eligible Countries (ELC) ---------- 5-1
This Section contains the list of eligible countries.

PART II REQUIREMENTS

Section 6 - Employer's Requirements (ERQ) ---------- 6-1
This Section contains the Specification, the Drawings, Supplementary Information that describe the Works to be procured, the Personnel Requirements, and the Equipment Requirements.

PART III CONDITIONS OF CONTRACT AND CONTRACT FORMS

Section 7 - General Conditions of Contract (GCC) ---------- 7-1
This Section contains the general clauses to be applied in all contracts. These Conditions are subject to the variations and additions set out in Section 8 (Particular Conditions of Contract).

Section 8 - Particular Conditions of Contract (PCC) ---------- 8-1
This Section contains provisions which are specific to each contract and which modify or supplement the GCC. Whenever there is a conflict, the provisions herein shall prevail over those in the GCC.

Section 9 - Contract Forms (COF) ---------- 9-1
This Section contains forms, which, once completed, will form part of the Contract. The forms for Performance Security and Advance Payment Security, when required, shall only be completed by the successful Bidder after contract award.

Blank Page

Section 1

Instructions to Bidders (ITB)

Blank Page

Section 1 - Instructions to Bidders

Table of Clauses

A. General 1-3

1. Scope of Bid 1-3
2. Source of Funds 1-3
3. Fraud and Corruption 1-3
4. Eligible Bidders 1-5
5. Eligible Materials, Equipment and Services 1-6

B. Contents of Bidding Document 1-7

6. Sections of Bidding Document 1-7
7. Clarification of Bidding Document, Site Visit, Pre-Bid Meeting 1-7
8. Amendment of Bidding Document 1-8

C. Preparation of Bids 1-8

9. Cost of Bidding 1-8
10. Language of Bid 1-8
11. Documents Comprising the Bid 1-9
12. Letters of Bid, and Schedules 1-9
13. Alternative Bids 1-9
14. Bid Prices and Discounts 1-10
15. Currencies of Bid and Payment 1-11
16. Documents Comprising the Technical Proposal 1-11
17. Documents Establishing the Qualifications of the Bidder 1-11
18. Period of Validity of Bids 1-11
19. Bid Security/Bid Securing Declaration 1-11
20. Format and Signing of Bid 1-12

D. Submission and Opening of Bids 1-13

21. Sealing and Marking of Bids 1-13
22. Deadline for Submission of Bids 1-14
23. Late Bids 1-14
24. Withdrawal, Substitution, and Modification of Bids 1-14
25. Bid Opening 1-14

E. Evaluation and Comparison of Bids 1-16

26. Confidentiality 1-16
27. Clarification of Bids 1-16
28. Deviations, Reservations, and Omissions 1-17
29. Preliminary Examination of Technical Bids 1-17
30. Responsiveness of Technical Bid 1-17

31. Nonconformities, Errors, and Omissions 1-18
32. Qualification of the Bidder 1-18
33. Correction of Arithmetical Errors 1-18
34. Conversion to Single Currency 1-19
35. Margin of Preference 1-19
36. Evaluation of Price Bids 1-19
37. Comparison of Bids 1-20
38. Employer's Right to Accept Any Bid, and to Reject Any or All Bids 1-20

F. Award of Contract 1-20

39. Award Criteria 1-20
40. Notification of Award 1-20
41. Signing of Contract 1-20
42. Performance Security 1-21

Section 1 - Instructions to Bidders

A. General

1. Scope of Bid

1.1 In connection with the Invitation for Bids indicated in the Bid Data Sheet (BDS), the Employer, as indicated in the BDS, issues this Bidding Document for the procurement of the Works as specified in Section 6 (Employer's Requirements). The name, identification, and number of contracts of this bidding are provided in the BDS.

1.2 Throughout this Bidding Document:

(a) the term "in writing" means communicated in written form and delivered against receipt;

(b) except where the context requires otherwise, words indicating the singular also include the plural and words indicating the plural also include the singular; and

(c) "day" means calendar day.

2. Source of Funds

2.1 The Borrower or Recipient (hereinafter called "Borrower") indicated in the BDS has applied for or received financing (hereinafter called "funds") from the Asian Development Bank (hereinafter called "ADB") toward the cost of the project named in the BDS. The Borrower intends to apply a portion of the funds to eligible payments under the contract(s) for which this Bidding Document is issued.

2.2 Payments by the ADB will be made only at the request of the Borrower and upon approval by the ADB in accordance with the terms and conditions of the financing agreement between the Borrower and the ADB (hereinafter called the Financing Agreement), and will be subject in all respects to the terms and conditions of that Financing Agreement. No party other than the Borrower shall derive any rights from the Financing Agreement or have any claim to the funds.

3. Fraud and Corruption

3.1 ADB's Anticorruption Policy requires borrowers (including beneficiaries of ADB-financed activity), as well as Bidders, suppliers, and contractors under ADB-financed contracts, observe the highest standard of ethics during the procurement and execution of such contracts. In pursuance of this policy, ADB:

(a) defines, for the purposes of this provision, the terms set forth below as follows:

(i) "corrupt practice" means the offering, giving, receiving, or soliciting, directly or indirectly, anything of value to influence improperly the actions of another party;

(ii) "fraudulent practice" means any act or omission, including a misrepresentation, that knowingly or recklessly misleads, or attempts to mislead, a party to obtain a financial or other benefit or to avoid an obligation;

(iii) "coercive practice" means impairing or harming, or threatening to impair or harm, directly or indirectly, any

party or the property of the party to influence improperly the actions of a party;

(iv) "collusive practice" means an arrangement between two or more parties designed to achieve an improper purpose, including influencing improperly the actions of another party;

(v) "integrity violation" means any act, as defined under ADB's Integrity Principles and Guidelines, which violates ADB's Anticorruption Policy including corrupt, fraudulent, coercive, or collusive practice, abuse, and obstructive practice;

(vi) "obstructive practice" means (a) deliberately destroying, falsifying, altering or concealing of evidence material to an ADB investigation; (b) making false statements to investigators in order to materially impede an ADB investigation; (c) failing to comply with requests to provide information, documents or records in connection with an OAI investigation; (d) threatening, harassing, or intimidating any party to prevent it from disclosing its knowledge of matters relevant to the investigation or from pursuing the investigation, or (e) materially impeding ADB's contractual rights of audit or access to information.

(b) will reject a proposal for award if it determines that the Bidder recommended for award has, directly or through an agent, engaged in corrupt, fraudulent, collusive, coercive, or obstructive practices or other integrity violations in competing for the Contract;

(c) will cancel the portion of the financing allocated to a contract if it determines at any time that representatives of the borrower or of a beneficiary of ADB-financing engaged in corrupt, fraudulent, collusive, coercive, or obstructive practices or other integrity violations during the procurement or the execution of that contract, without the borrower having taken timely and appropriate action satisfactory to ADB to remedy the situation;

(d) will sanction impose remedial actions on a firm or an individual, at any time, in accordance with ADB's Anticorruption Policy and Integrity Principles and Guidelines (both as amended from time to time), including declaring ineligible, either indefinitely or for a stated period of time, to participate[1] in ADB-financed, or administered or supported activities or to benefit from an ADB-financed, administered or supported contract, financially or otherwise, if it at any time determines that the firm or individual has, directly or through an agent, engaged in corrupt, fraudulent, collusive, coercive, or obstructive practices or other integrity violations; and

[1] Whether as a contractor, nominated subcontractor, consultant, manufacturer or supplier, or service provider; or in any other capacity (different names are used depending on the particular bidding document). A nominated subcontractor is one which either has been: (i) included by the bidder in its pre-qualification application or bid because it brings specific and critical experience and know-how that are accounted for in the evaluation of the bidder's pre-qualification application or the bid; or (ii) appointed by the Employer.

(e) will have the right to require that a provision be included in bidding documents and in contracts financed by ADB, requiring Bidders, suppliers and contractors to permit ADB or its representative to inspect their accounts and records and other documents relating to the bid submission and contract performance and to have them audited by auditors appointed by ADB.

3.2 Furthermore, Bidders shall be aware of the provisions of GCC 28.3 and 73.2 (i).

4. Eligible Bidders

4.1 A Bidder may be a natural person, private entity, government-owned entity – subject to ITB 4.5 – or any combination of them with a formal intent to enter into an agreement or under an existing agreement in the form of a Joint Venture (JV). In the case of a JV:

(a) all partners shall be jointly and severally liable, and

(b) the JV shall nominate a Representative who shall have the authority to conduct all business for and on behalf of any and all the parties of the JV during the bidding process and, in the event the JV is awarded the Contract, during contract execution.

4.2 A Bidder, and all parties constituting the Bidder, shall have the nationality of an eligible country, in accordance with Section 5 (Eligible Countries). A Bidder shall be deemed to have the nationality of a country if the Bidder is a citizen or is constituted, or incorporated, and operates in conformity with the provisions of the laws of that country. This criterion shall also apply to the determination of the nationality of proposed subcontractors or suppliers for any part of the Contract including related services.

4.3 A Bidder shall not have a conflict of interest. All Bidders found to have a conflict of interest shall be disqualified. A Bidder may be considered to be in a conflict of interest with one or more parties in this bidding process if including but not limited to:

(a) they have controlling shareholders in common; or

(b) they receive or have received any direct or indirect subsidy from any of them; or

(c) they have the same legal representative for purposes of this bid; or

(d) they have a relationship with each other, directly or through common third parties, that puts them in a position to have access to material information about or improperly influence the Bid of another Bidder, or influence the decisions of the Employer regarding this bidding process; or

(e) a Bidder participates in more than one bid in this bidding process, either individually or as a partner in a joint venture, except for alternative offers permitted under ITB Clause 13 of the Bidding Document. This will result in the disqualification of all Bids in which it is involved. However, subject to any finding of a conflict of interest in terms of 4.3 (a) - (d) above, this does not limit the participation of a Bidder as a Subcontractor in another bide or of a firm as a Subcontractor in more than one bid; or

(f) a Bidder or any affiliated entity, participated as a Consultant in the preparation of the design or technical specifications of the works that are the subject of the Bid; or

(g) a Bidder was affiliated with a firm or entity that has been hired (or is proposed to be hired) by the Employer or Borrower as Engineer for the contract.

4.4 A firm shall not be eligible to participate in any procurement activities under an ADB-financed or ADB-supported project while under sanction by ADB pursuant to its Anticorruption Policy (see ITB 3), whether such sanction was directly imposed by ADB, or imposed by ADB pursuant to the Agreement for Mutual Enforcement of Debarment Decisions. A bid from a sanctioned or cross-debarred firm will be rejected.

4.5 Government-owned enterprises in the Employer's country shall be eligible only if they can establish that they (i) are legally and financially autonomous, (ii) operate under commercial law, and that they (iii) are not a dependent agency of the Employer.

4.6 Bidders shall provide such evidence of their continued eligibility satisfactory to the Employer, as the Employer shall reasonably request.

4.7 Firms shall be excluded if by an act of compliance with a decision of the United Nations Security Council taken under Chapter VII of the Charter of the United Nations, the Borrower's country prohibits any import of goods or contracting of works or services from that country or any payments to persons or entities in that country.

4.8 In case a prequalification process has been conducted prior to the bidding process, this bidding is open only to prequalified Bidders.

5. Eligible Materials, Equipment and Services

5.1 The materials, equipment and services to be supplied under the Contract shall have their origin in eligible source countries as defined in ITB 4.2 above and all expenditures under the Contract will be limited to such materials, equipment, and services. At the Employer's request, Bidders may be required to provide evidence of the origin of materials, equipment and services.

5.2 For purposes of ITB 5.1 above, "origin" means the place where the materials and equipment are mined, grown, produced or manufactured, and from which the services are provided. Materials and equipment are produced when, through manufacturing, processing, or substantial or major assembling of components, a commercially recognized product results that differs substantially in its basic characteristics or in purpose or utility from its components.

B. Contents of Bidding Document

6. Sections of Bidding Document

6.1 The Bidding Document consist of Parts I, II, and III, which include all the Sections indicated below, and should be read in conjunction with any Addenda issued in accordance with ITB 8.

PART I Bidding Procedures
Section 1 - Instructions to Bidders (ITB)
Section 2 - Bid Data Sheet (BDS)
Section 3 - Evaluation and Qualification Criteria (EQC)
Section 4 - Bidding Forms (BDF)
Section 5 - Eligible Countries (ELC)

PART II Requirements
Section 6 –Employer's Requirements (ERQ)

PART III Conditions of Contract and Contract Forms
Section 7 - General Conditions of Contract (GCC)
Section 8 - Particular Conditions of Contract (PCC)
Section 9 - Contract Forms (COF)

6.2 The Invitation for Bids issued by the Employer is not part of the Bidding Document.

6.3 The Employer is not responsible for the completeness of the Bidding Document and their Addenda, if they were not obtained directly from the source stated by the Employer in the Invitation for Bids.

6.4 The Bidder is expected to examine all instructions, forms, terms, and specifications in the Bidding Document. Failure to furnish all information or documentation required by the Bidding Document may result in the rejection of the bid.

7. Clarification of Bidding Document, Site Visit, Pre-Bid Meeting

7.1 A prospective Bidder requiring any clarification of the Bidding Document shall contact the Employer in writing at the Employer's address indicated in the BDS or raise his inquiries during the pre-bid meeting if provided for in accordance with ITB 7.4. The Employer will respond in writing to any request for clarification, provided that such request is received prior to the deadline for submission of bids, within a period given in the BDS. The Employer shall forward copies of its response to all Bidders who have acquired the Bidding Document in accordance with ITB 6.3, including a description of the inquiry but without identifying its source. Should the Employer deem it necessary to amend the Bidding Document as a result of a request for clarification, it shall do so following the procedure under ITB 8 and ITB 22.2.

7.2 The Bidder is advised to visit and examine the Site of Works and its surroundings and obtain for itself, on its own risk and responsibility, all information that may be necessary for preparing the bid and entering into a contract for construction of the Works. The costs of visiting the Site shall be at the Bidder's own expense.

7.3 The Bidder and any of its personnel or agents will be granted permission by the Employer to enter upon its premises and lands for the purpose of such visit, but only upon the express condition that the Bidder, its personnel, and agents will release and indemnify the

Employer and its personnel and agents from and against all liability in respect thereof, and will be responsible for death or personal injury, loss of or damage to property, and any other loss, damage, costs, and expenses incurred as a result of the inspection.

7.4 The Bidder's designated representative is invited to attend a pre-bid meeting, if provided for in the BDS. The purpose of the meeting will be to clarify issues and to answer questions on any matter that may be raised at that stage.

7.5 The Bidder is requested to submit any questions in writing, to reach the Employer not later than one week before the meeting.

7.6 Minutes of the pre-bid meeting, including the text of the questions raised, without identifying the source, and the responses given, together with any responses prepared after the meeting, will be transmitted promptly to all Bidders who have acquired the Bidding Document in accordance with ITB 6.3. Any modification to the Bidding Document that may become necessary as a result of the pre-bid meeting shall be made by the Employer exclusively through the issue of an addendum pursuant to ITB 8 and not through the minutes of the pre-bid meeting.

7.7 Nonattendance at the pre-bid meeting will not be a cause for disqualification of a Bidder.

8. Amendment of Bidding Document

8.1 At any time prior to the deadline for submission of bids, the Employer may amend the Bidding Document by issuing addenda.

8.2 Any addendum issued shall be part of the Bidding Document and shall be communicated in writing to all who have obtained the Bidding Document from the Employer in accordance with ITB 6.3.

8.3 To give prospective Bidders reasonable time in which to take an addendum into account in preparing their bids, the Employer may, at its discretion, extend the deadline for the submission of bids, pursuant to ITB 22.2.

C. Preparation of Bids

9. Cost of Bidding

9.1 The Bidder shall bear all costs associated with the preparation and submission of its Bid, and the Employer shall in no case be responsible or liable for those costs, regardless of the conduct or outcome of the bidding process.

10. Language of Bid

10.1 The Bid, as well as all correspondence and documents relating to the bid exchanged by the Bidder and the Employer, shall be written in the language specified in the BDS. Supporting documents and printed literature that are part of the Bid may be in another language provided they are accompanied by an accurate translation of the relevant passages in the language specified in the BDS, in which case, for purposes of interpretation of the Bid, such translation shall govern.

11. Documents Comprising the Bid

11.1 The Bid shall comprise two envelopes submitted simultaneously; one called the Technical Bid containing the documents listed in ITB 11.2and the other the Price Bid containing the documents listed in ITB 11.3, both envelopes enclosed together in an outer single envelope.

11.2 The Technical Bid shall comprise the following:

(a) Letter of Technical Bid;

(b) Bid Security or Bid Securing Declaration, in accordance with ITB 19;

(c) alternative bids, at Bidder's option and if permissible, in accordance with ITB 13;

(d) written confirmation authorizing the signatory of the Bid to commit the Bidder, in accordance with ITB 20.2;

(e) documentary evidence in accordance with ITB 17 establishing the Bidder's qualifications to perform the contract;

(f) Technical Proposal in accordance with ITB 16;

(g) Any other document required in the BDS.

11.3 The Price Bid shall comprise the following:

(a) Letter of Price Bid;

(b) completed Price Schedules, in accordance with ITB 12 and 14, or as stipulated in the BDS;

(c) alternative price bids, at Bidder's option and if permissible, in accordance with ITB 13;

(d) Any other document required in the BDS.

11.4 In addition to the requirements under ITB 11.2, bids submitted by a JV shall include a copy of the Joint Venture Agreement entered into by all partners. Alternatively, a Letter of Intent to execute a Joint Venture Agreement in the event of a successful bid shall be signed by all partners and submitted with the bid, together with a copy of the proposed agreement.

12. Letters of Bid and Schedules

12.1 The Letters of Technical Bid and Price Bid, and the Schedules, and all documents listed under Clause 11, shall be prepared using the relevant forms furnished in Section 4 (Bidding Forms). The forms must be completed without any alterations to the text, and no substitutes shall be accepted. All blank spaces shall be filled in with the information requested.

13. Alternative Bids

13.1 Unless otherwise indicated in the BDS, alternative bids shall not be considered.

13.2 When alternative times for completion are explicitly invited, a statement to that effect will be included in the BDS, as will the method of evaluating different times for completion.

13.3 When specified in the BDS pursuant to ITB 13.1, and subject to ITB 13.4 below, Bidders wishing to offer technical alternatives to the requirements of the Bidding Document must first price the Employer's design as described in the Bidding Document and shall further provide

all information necessary for a complete evaluation of the alternative by the Employer, including drawings, design calculations, technical specifications, breakdown of prices, and proposed construction methodology and other relevant details. Only the technical alternatives, if any, of the lowest evaluated Bidder conforming to the basic technical requirements shall be considered by the Employer.

13.4 When specified in the BDS, Bidders are permitted to submit alternative technical solutions for specified parts of the Works. Such parts will be identified in the BDS and described in Section 6 (Employer's Requirements). The method for their evaluation will be stipulated in Section 3 (Evaluation and Qualification Criteria).

14. Bid Prices and Discounts

14.1 The prices and discounts quoted by the Bidder in the Letter of Price Bid and in the Schedules shall conform to the requirements specified below.

14.2 The Bidder shall submit a bid for the whole of the works described in ITB 1.1 by filling in prices for all items of the Works, as identified in Section 4 (Bidding Forms). In case of admeasurement contracts, the Bidder shall fill in rates and prices for all items of the Works described in the Bill of Quantities. Items against which no rate or price is entered by the Bidder will not be paid for by the Employer when executed and shall be deemed covered by the rates for other items and prices in the Bill of Quantities.

14.3 The price to be quoted in the Letter of Price Bid shall be the total price of the Bid, excluding any discounts offered.

14.4 Unconditional discounts, if any, and the methodology for their application shall be quoted in the Letter of Price Bid, in accordance with ITB 12.1.

14.5 Unless otherwise provided in the BDS and the Conditions of Contract, the prices quoted by the Bidder shall be fixed. If the prices quoted by the Bidder are subject to adjustment during the performance of the Contract in accordance with the provisions of the Conditions of Contract, the Bidder shall furnish the indices and weightings for the price adjustment formulae in the Table(s) of Adjustment Data in Section 4 (Bidding Forms) and the Employer may require the Bidder to justify its proposed indices and weightings.

14.6 If so indicated in ITB 1.1, bids are being invited for individual contracts or for any combination of contracts (packages). Bidders wishing to offer any price reduction for the award of more than one Contract shall specify in their bid the price reductions applicable to each package, or alternatively, to individual Contracts within the package. Price reductions or discounts shall be submitted in accordance with ITB 14.4, provided the bids for all contracts are submitted and opened at the same time.

14.7 All duties, taxes, and other levies payable by the Contractor under the Contract, or for any other cause, as of the date 28 days prior to the deadline for submission of bids, shall be included in the rates and prices and the total Bid Price submitted by the Bidder.

15. Currencies of Bid and Payment

15.1 The currency(ies) of the bid and payment shall be as specified in the BDS.

15.2 Bidders may be required by the Employer to justify, to the Employer's satisfaction, their local and foreign currency requirements, and to substantiate that the amounts included in the prices shown in the appropriate form(s) of Section 4, in which case a detailed breakdown of the foreign currency requirements shall be provided by Bidders.

16. Documents Comprising the Technical Proposal

16.1 The Bidder shall furnish a Technical Proposal including a statement of work methods, equipment, personnel, schedule and any other information as stipulated in Section 4 (Bidding Forms), in sufficient detail to demonstrate the adequacy of the Bidders' proposal to meet the work requirements and the completion time.

17. Documents Establishing the Qualifications of the Bidder

17.1 To establish its qualifications to perform the Contract in accordance with Section 3 (Evaluation and Qualification Criteria) the Bidder shall provide the information requested in the corresponding information sheets included in Section 4 (Bidding Forms).

17.2 Domestic Bidders, individually or in joint ventures, applying for eligibility for domestic preference shall supply all information required to satisfy the criteria for eligibility in accordance with ITB 35.

18. Period of Validity of Bids

18.1 Bids shall remain valid for the period specified in the BDS after the bid submission deadline date prescribed by the Employer. A bid valid for a shorter period shall be rejected by the Employer as nonresponsive.

18.2 In exceptional circumstances, prior to the expiration of the bid validity period, the Employer may request Bidders to extend the period of validity of their Bids. The request and the responses shall be made in writing. If a bid security is requested in accordance with ITB 19, it shall also be extended twenty-eight (28) days beyond the deadline of the extended validity period. A Bidder may refuse the request without forfeiting its bid security. A Bidder granting the request shall not be required or permitted to modify its Bid.

19. Bid Security/Bid Securing Declaration

19.1 Unless otherwise specified in the BDS, the Bidder shall furnish as part of its bid, in original form, either a Bid Securing Declaration or a bid security as specified in the BDS. In the case of a bid security, the amount shall be as specified in the BDS.

19.2 A Bid Securing Declaration shall use the form included in Section 4 (Bidding Forms). The Employer will declare a Bidder ineligible to be awarded a Contract for a specified period of time, as indicated in the BDS, if the Bid Securing Declaration is executed.

19.3 If a bid security is specified pursuant to ITB 19.1, the bid security shall be, at the Bidder's option, in any of the following forms:

(a) an unconditional bank guarantee;

(b) an irrevocable letter of credit; or

(c) a cashier's or certified check;

all from a reputable bank from an eligible country as described in Section 5 (Eligible Countries). In the case of a bank guarantee, the bid security shall be submitted either using the Bid Security Form included in Section 4 (Bidding Forms) or another form acceptable to the Employer. The form must include the complete name of the Bidder. The bid security shall be valid for twenty-eight days (28) beyond the original validity period of the bid, or beyond any period of extension if requested under ITB 18.2.

19.4 Any bid not accompanied by a substantially compliant bid security in accordance with ITB 19.3, or Bid Securing Declaration in accordance with ITB 19.2, if required in accordance with ITB 19.1 shall be rejected by the Employer as non-responsive.

19.5 If a bid security is specified pursuant to ITB 19.1, the bid security of unsuccessful Bidders shall be returned as promptly as possible upon the successful Bidder's furnishing of the performance security pursuant to ITB 42.

19.6 If a bid security is specified pursuant to ITB 19.1, the bid security of the successful Bidder shall be returned as promptly as possible once the successful Bidder has signed the Contract and furnished the required performance security.

19.7 The bid security may be forfeited or the Bid Securing Declaration executed:

(a) if a Bidder withdraws its bid during the period of bid validity specified by the Bidder on the Letters of Technical Bid and Price Bid, except as provided in ITB 18.2 or

(b) if the successful Bidder fails to:

(i) sign the Contract in accordance with ITB 41;

(ii) furnish a performance security in accordance with ITB 42; or

(iii) accept arithmetical corrections in accordance with ITB 33; or

(iv) furnish a domestic preference security, if applicable, in accordance with ITB 42.

19.8 The Bid Security or the Bid Securing Declaration of a JV shall be in the name of the JV that submits the Bid. If the JV has not been legally constituted at the time of bidding, the Bid Security or the Bid Securing Declaration shall be in the names of all future partners as named in the letter of intent mentioned in ITB 4.1.

20. Format and Signing of Bid

20.1 The Bidder shall prepare one original of the Technical Bid and one original of the Price Bid comprising the Bid as described in ITB 11 and clearly mark it "ORIGINAL - TECHNICAL BID" and "ORIGINAL - PRICE BID". Alternative bids, if permitted in accordance with ITB 13, shall be clearly marked "ALTERNATIVE". In addition, the Bidder shall submit copies of the bid in the number specified in the BDS**,** and clearly mark each of them "COPY." In the event of any discrepancy between the original and the copies, the original shall prevail.

20.2 The original and all copies of the Bid shall be typed or written in indelible ink and shall be signed by a person duly authorized to sign on behalf of the Bidder. This authorization shall consist of a written confirmation as specified in the BDS and shall be attached to the bid. The name and position held by each person signing the authorization must be typed or printed below the signature. All pages of the Bid, except for unamended printed literature, shall be signed or initialed by the person signing the bid.

20.3 Any amendments such as interlineations, erasures, or overwriting shall be valid only if they are signed or initialed by the person signing the bid.

D. Submission and Opening of Bids

21. Sealing and Marking of Bids

21.1 Bidders may always submit their bids by mail or by hand. When so specified in the BDS, Bidders shall have the option of submitting their bids electronically. Procedures for submission, sealing and marking are as follows:

(a) Bidders submitting bids by mail or by hand shall enclose the original of the Technical Bid, the original of the Price Bid, and each copy of the Technical Bid and each copy of the Price Bid, in separate sealed envelopes, duly marking the envelopes as "ORIGINAL - TECHNICAL BID", "ORIGINAL - PRICE BID" and "COPY NO… - TECHNICAL BID" and "COPY NO…. - PRICE BID." These envelopes, the first containing the originals and the others containing copies, shall then be enclosed in one single envelope per set. If permitted in accordance with ITB 13, alternative bids shall be similarly sealed, marked and included in the sets. The rest of the procedure shall be in accordance with ITB 21.2 and 21.3.

(b) Bidders submitting bids electronically shall follow the electronic bid submission procedures specified in the BDS.

21.2 The inner and outer envelopes shall:

(a) bear the name and address of the Bidder;

(b) be addressed to the Employer as provided in BDS 22.1; and

(c) bear the specific identification of this bidding process indicated in the BDS 1.1.

21.3 The outer envelopes and the inner envelopes containing the Technical Bid shall bear a warning not to open before the time and date for the opening of Technical Bid, in accordance with ITB Sub-Clause 25.1.

21.4 The inner envelopes containing the Price Bid shall bear a warning not to open until advised by the Employer in accordance with ITB Sub-Clause 25.7.

21.5 If all envelopes are not sealed and marked as required, the Employer will assume no responsibility for the misplacement or premature opening of the bid.

22. Deadline for Submission of Bids

22.1 Bids must be received by the Employer at the address and no later than the date and time indicated in the BDS.

22.2 The Employer may, at its discretion, extend the deadline for the submission of bids by amending the Bidding Document in accordance with ITB 8, in which case all rights and obligations of the Employer and Bidders previously subject to the deadline shall thereafter be subject to the deadline as extended.

23. Late Bids

23.1 The Employer shall not consider any bid that arrives after the deadline for submission of bids, in accordance with ITB 22. Any bid received by the Employer after the deadline for submission of bids shall be declared late, rejected, and returned unopened to the Bidder.

24. Withdrawal, Substitution, and Modification of Bids

24.1 A Bidder may withdraw, substitute, or modify its Bid – Technical or Price – after it has been submitted by sending a written notice, duly signed by an authorized representative, and shall include a copy of the authorization in accordance with ITB 20.2, (except that withdrawal notices do not require copies). The corresponding substitution or modification of the bid must accompany the respective written notice. All notices must be:

(a) prepared and submitted in accordance with ITB 20 and ITB 21 (except that withdrawal notices do not require copies), and in addition, the respective envelopes shall be clearly marked "WITHDRAWAL," "SUBSTITUTION," "MODIFICATION;" and

(b) received by the Employer prior to the deadline prescribed for submission of bids, in accordance with ITB 22.

24.2 Bids requested to be withdrawn in accordance with ITB 24.1 shall be returned unopened to the Bidders.

24.3 No bid may be withdrawn, substituted, or modified in the interval between the deadline for submission of bids and the expiration of the period of bid validity specified by the Bidder on the Letters of Technical Bid and Price Bid or any extension thereof.

25. Bid Opening

25.1 The Employer shall open the Technical Bids in public at the address, date and time specified in the BDS in the presence of Bidders` designated representatives and anyone who choose to attend. Any specific electronic bid opening procedures required if electronic bidding is permitted in accordance with ITB 21.1, shall be as specified in the BDS.The Price Bids will remain unopened and will be held in custody of the Employer until the specified time of their opening. If the Technical Bid and Price Bid are submitted together in one envelope, the Employer may reject the entire Bid. Alternatively, the Price Bid may be immediately resealed for later evaluation.

25.2 First, envelopes marked "WITHDRAWAL" shall be opened and read out and the envelope with the corresponding bid shall not be opened, but returned to the Bidder. No bid withdrawal shall be permitted unless the corresponding withdrawal notice contains a valid authorization to request the withdrawal and is read out at bid opening.

25.3 Second, outer envelopes marked “SUBSTITUTION” shall be opened. The inner envelopes containing the Substitution Technical Bid and/or Substitution Price Bid shall be exchanged for the corresponding envelopes being substituted, which are to be returned to the Bidder unopened. Only the Substitution Technical Bid, if any, shall be opened, read out, and recorded. Substitution Price Bid will remain unopened in accordance with ITB Sub-Clause 25.1. No envelope shall be substituted unless the corresponding Substitution Notice contains a valid authorization to request the substitution and is read out and recorded at bid opening.

25.4 Next, outer envelopes marked “MODIFICATION” shall be opened. No Technical Bid and/or Price Bid shall be modified unless the corresponding Modification Notice contains a valid authorization to request the modification and is read out and recorded at the opening of Technical Bids. Only the Technical Bids, both Original as well as Modification, are to be opened, read out, and recorded at the opening. Price Bids, both Original and Modification, will remain unopened in accordance with ITB Sub-Clause 25.1.

25.5 All other envelopes holding the Technical Bids shall be opened one at a time, and the following read out and recorded:

(a) the name of the Bidder;

(b) whether there is a modification or substitution;

(c) the presence of a Bid Securityor a bid securing declaration, if required; and

(d) any other details as the Employer may consider appropriate.

Only Technical Bids and alternative Technical Bids read out and recorded at bid opening shall be considered for evaluation. Unless otherwise specified in the BDS, all pages of the Letter of Technical Bid are to be initialed by at least three representatives of the Employer attending the bid opening. No Bid shall be rejected at the opening of Technical Bids except for late bids, in accordance with ITB Sub-Clause 23.1.

25.6 The Employer shall prepare a record of the opening of Technical Bids that shall include, as a minimum: the name of the Bidder and whether there is a withdrawal, substitution, or modification; alternative proposals; and the presence or absence of a bid security or a bid securing declaration, if one was required. The Bidders’ representatives who are present shall be requested to sign the record. The omission of a Bidder’s signature on the record shall not invalidate the contents and effect of the record. A copy of the record shall be distributed to all Bidders.

25.7 At the end of the evaluation of the Technical Bids, the Employer will invite bidders who have submitted substantially responsive Technical Bids and who have been determined as being qualified for award to attend the opening of the Price Bids. The date, time, and location of the opening of Price Bids will be advised in writing by the Employer. Bidders shall be given reasonable notice for the opening of Price Bids.

25.8 The Employer will notify Bidders in writing who have been rejected on the grounds of their Technical Bids being substantially non-responsive to the requirements of the Bidding Document and return their Price Bids unopened.

25.9 The Employer shall conduct the opening of Price Bids of all Bidders who submitted substantially responsive Technical Bids, in the presence of Bidders` representatives who choose to attend at the address, date and time specified by the Employer. The Bidder's representatives who are present shall be requested to sign a register evidencing their attendance.

25.10 All envelopes containing Price Bids shall be opened one at a time and the following read out and recorded:

(a) the name of the Bidder;

(b) whether there is a modification or substitution;

(c) the Bid Prices, including any discounts and alternative offers; and

(d) any other details as the Employer may consider appropriate.

Only Price Bids, discounts, and alternative offers read out and recorded during the opening of Price Bids shall be considered for evaluation. Unless otherwise specified in the BDS, all pages of the Letter of Price Bid and Schedules are to be initialed by at least three representatives of the Employer attending the bid opening.No Bid shall be rejected at the opening of Price Bids.

25.11 The Employer shall prepare a record of the opening of Price Bids that shall include, as a minimum: the name of the Bidder, the Bid Price (per lot if applicable), any discounts, and alternative offers. The Bidders' representatives who are present shall be requested to sign the record. The omission of a Bidder's signature on the record shall not invalidate the contents and effect of the record. A copy of the record shall be distributed to all Bidders.

E. Evaluation and Comparison of Bids

26. Confidentiality

26.1 Information relating to the examination, evaluation, comparison, and post qualification of bids and recommendation of contract award, shall not be disclosed to Bidders or any other persons not officially concerned with such process until information on Contract award is communicated to all Bidders.

26.2 Any attempt by a Bidder to influence the Employer in the evaluation of the bids or Contract award decisions may result in the rejection of its Bid.

26.3 Notwithstanding ITB 26.2, from the time of bid opening to the time of Contract award, if any Bidder wishes to contact the Employer on any matter related to the bidding process, it may do so in writing.

27. Clarification of Bids

27.1 To assist in the examination, evaluation, and comparison of the Technical and Price Bids, the Employer may, at its discretion, ask any Bidder for a clarification of its bid. Any clarification submitted by a

Bidder that is not in response to a request by the Employer shall not be considered. The Employer's request for clarification and the response shall be in writing. No change in the substance of the Technical Bid or prices in the Price Bid shall be sought, offered, or permitted, except to confirm the correction of arithmetic errors discovered by the Employer in the evaluation of the Price Bids, in accordance with ITB 33.

27.2 If a Bidder does not provide clarifications of its Bid by the date and time set in the Employer's request for clarification, its bid may be rejected.

28. Deviations, Reservations, and Omissions

28.1 During the evaluation of bids, the following definitions apply:

(a) "Deviation" is a departure from the requirements specified in the Bidding Document;

(b) "Reservation" is the setting of limiting conditions or withholding from complete acceptance of the requirements specified in the Bidding Document; and

(c) "Omission" is the failure to submit part or all of the information or documentation required in the Bidding Document.

29. Preliminary Examination of Technical Bids

29.1 The Employer shall examine the Technical Bid to confirm that all documents and technical documentation requested in ITB Sub-Clause 11.2 have been provided, and to determine the completeness of each document submitted.

29.2 The Employer shall confirm that the following documents and information have been provided in the Technical Bid. If any of these documents or information is missing, the offer shall be rejected.

(a) Letter of Technical Bid;

(b) written confirmation of authorization to commit the Bidder;

(c) Bid Security or Bid Securing Declaration, if applicable; and

(d) Technical Proposal in accordance with ITB 16.

30. Responsiveness of Technical Bid

30.1 The Employer's determination of a Bid's responsiveness is to be based on the contents of the bid itself, as defined in ITB11.

30.2 A substantially responsive Technical Bid is one that meets the requirements of the Bidding Document without material deviation, reservation, or omission. A material deviation, reservation, or omission is one that,

(a) if accepted, would:

(i) affect in any substantial way the scope, quality, or performance of the Works specified in the Contract; or

(ii) limit in any substantial way, inconsistent with the Bidding Document, the Employer's rights or the Bidder's obligations under the proposed Contract; or

(b) if rectified, would unfairly affect the competitive position of other Bidders presenting substantially responsive bids.

30.3 The Employer shall examine the technical aspects of the Bid submitted in accordance with ITB 16, Technical Proposal, in particular, to confirm

that all requirements of Section 6 (Employer's Requirements) have been met without any material deviation or reservation.

30.4 If a bid is not substantially responsive to the requirements of the Bidding Document, it shall be rejected by the Employer and may not subsequently be made responsive by correction of the material deviation, reservation, or omission.

31. Nonconformities, Errors, and Omissions

31.1 Provided that a bid is substantially responsive, the Employer may waive any nonconformities in the Bid that do not constitute a material deviation, reservation or omission.

31.2 Provided that a Technical Bid is substantially responsive, the Employer may request that the Bidder submit the necessary information or documentation, within a reasonable period of time, to rectify nonmaterial nonconformities in the Technical Bid related to documentation requirements. Requesting information or documentation on such nonconformities shall not be related to any aspect of the Price Bid. Failure of the Bidder to comply with the request may result in the rejection of its Bid.

31.3 Provided that a Technical Bid is substantially responsive, the Employer shall rectify quantifiable nonmaterial nonconformities related to the Bid Price. To this effect, the Bid Price shall be adjusted, for comparison purposes only, to reflect the price of a missing or non-conforming item or component. The adjustment shall be made using the method indicated in Section 3 (Evaluation and Qualification Criteria).

32. Qualification of the Bidder

32.1 The Employer shall determine to its satisfaction during the evaluation of Technical Bids whether Biddersmeet the qualifying criteria specified in Section 3 (Evaluation and Qualification Criteria).

32.2 The determination shall be based upon an examination of the documentary evidence of the Bidder's qualifications submitted by the Bidder, pursuant to ITB 17.1.

32.3 An affirmative determination shall be a prerequisite for the opening and evaluation of a Bidder's Price Bid. A negative determination shall result into the disqualification of the Bid, in which event the Employer shall return the unopened Price Bid to the Bidder.

33. Correction of Arithmetical Errors

33.1 During the evaluation of Price Bids, the Employer shall correct arithmetical errors on the following basis:

(a) only for unit price contracts, if there is a discrepancy between the unit price and the total price that is obtained by multiplying the unit price and quantity, the unit price shall prevail and the total price shall be corrected, unless in the opinion of the Employer there is an obvious misplacement of the decimal point in the unit price, in which case the total price as quoted shall govern and the unit price shall be corrected;

(b) if there is an error in a total corresponding to the addition or subtraction of subtotals, the subtotals shall prevail and the total shall be corrected;

(c) if there is a discrepancy between the bid price in the Summary of

Bill of Quantities and the bid amount in item (c) of the Letter of Price Bid, the bid price in the Summary of Bill of Quantities will prevail and the bid amount in item (c) of the Letter of Price Bid will be corrected; and

(d) if there is a discrepancy between words and figures, the amount in words shall prevail, unless the amount expressed in words is related to an arithmetic error, in which case the amount in figures shall prevail subject to (a), (b) and (c) above.

33.2 If the Bidder that submitted the lowest evaluated bid does not accept the correction of errors, its Bid shall be disqualified and its bid security may be forfeited or its bid securing declaration executed.

34. Conversion to Single Currency

34.1 For evaluation and comparison purposes, the currency (ies) of the bid shall be converted into a single currency as specified in the BDS.

35. Margin of Preference

35.1 Unless otherwise specified in the BDS, a margin of preference shall not apply.

36. Evaluation of Price Bids

36.1 The Employer shall use the criteria and methodologies listed in this Clause. No other evaluation criteria or methodologies shall be permitted.

36.2 To evaluate the Price Bid, the Employer shall consider the following:

(a) the bid price, excluding Provisional Sums and the provision, if any, for contingencies in the Summary Bill of Quantities for admeasurement contracts, or Schedule of Prices for lump sum contracts, but including Day work items, where priced competitively;

(b) price adjustment for correction of arithmetic errors in accordance with ITB 33.1;

(c) price adjustment due to discounts offered in accordance with ITB 14.4;

(d) converting the amount resulting from applying (a) to (c) above, if relevant, to a single currency in accordance with ITB 34;

(e) adjustment for nonconformities in accordance with ITB 31.3;

(f) application of all the evaluation factors indicated in Section 3 (Evaluation and Qualification Criteria).

36.3 The estimated effect of the price adjustment provisions of the Conditions of Contract, applied over the period of execution of the Contract, shall not be taken into account in bid evaluation.

36.4 If this Bidding Document allows Bidders to quote separate prices for different contracts, and to award multiple contracts to a single Bidder, the methodology to determine the lowest evaluated price of the contract combinations, including any discounts offered in the Letter of Price Bid, is specified in Section 3 (Evaluation and Qualification Criteria).

36.5 If the Bid for an admeasurement contract, which results in the lowest Evaluated Bid Price, is seriously unbalanced, front loaded or substantially below updated estimates in the opinion of the Employer, the Employer may require the Bidder to produce detailed price analyses for any or all items of the Bill of Quantities, to demonstrate the internal consistency of those prices with the construction methods and schedule proposed. After evaluation of the price analyses, taking into consideration the schedule of estimated Contract payments, the Employer may require that the amount of the performance security be increased at the expense of the Bidder to a level sufficient to protect the Employer against financial loss in the event of default of the successful Bidder under the Contract.

37. Comparison of Bids

37.1 The Employer shall compare all substantially responsive bids to determine the lowest evaluated bid. in accordance with ITB 36.2.

38. Employer's Right to Accept Any Bid, and to Reject Any or All Bids

38.1 The Employer reserves the right to accept or reject any bid, and to annul the bidding process and reject all bids at any time prior to contract award, without thereby incurring any liability to Bidders. In case of annulment, all bids submitted and specifically, bid securities, shall be promptly returned to the Bidders.

F. Award of Contract

39. Award Criteria

39.1 The Employer shall award the Contract to the Bidder whose offer has been determined to be the lowest evaluated bid and is substantially responsive to the Bidding Document, provided further that the Bidder is determined to be qualified to perform the Contract satisfactorily.

40. Notification of Award

40.1 Prior to the expiration of the period of bid validity, the Employer shall notify the successful Bidder, in writing, that its bid has been accepted.

40.2 At the same time, the Employer shall also notify all other Bidders of the results of the bidding. The Employer will publish in an English language newspaper or well-known freely accessible website the results identifying the bid and lot numbers and the following information: (i) name of each Bidder who submitted a Bid; (ii) bid prices as read out at bid opening; (iii) name and evaluated prices of each Bid that was evaluated; (iv) name of bidders whose bids were rejected and the reasons for their rejection; and (v) name of the winning Bidder, and the price it offered, as well as the duration and summary scope of the contract awarded. After publication of the award, unsuccessful bidders may request in writing to the Employer for a debriefing seeking explanations on the grounds on which their bids were not selected. The Employer shall promptly respond in writing to any unsuccessful Bidder who, after Publication of contract award, requests a debriefing.

40.3 Until a formal contract is prepared and executed, the notification of award shall constitute a binding Contract.

41. Signing of Contract

41.1 Promptly after notification, the Employer shall send the successful Bidder the Contract Agreement.

41.2 Within twenty-eight (28) days of receipt of the Contract Agreement, the successful Bidder shall sign, date, and return it to the Employer.

42. Performance Security

42.1 Within twenty-eight (28) days of the receipt of notification of award from the Employer, the successful Bidder shall furnish the performance security in accordance with the Conditions of Contract, subject to ITB 36.5, using for that purpose the Performance Security Form included in Section 9 (Contract Forms), or another form acceptable to the Employer.

42.2 Failure of the successful Bidder to submit the above-mentioned Performance Security or to sign the Contract Agreement shall constitute sufficient grounds for the annulment of the award and forfeiture of the bid security or execution of the bid securing declaration. In that event the Employer may award the Contract to the next lowest evaluated Bidder whose offer is substantially responsive and is determined by the Employer to be qualified to perform the Contract satisfactorily.

42.3 The above provision shall also apply to the furnishing of a domestic preference security if so required.

Blank Page

Section 2

Bid Data Sheet (BDS)

Blank Page

Section 2 - Bid Data Sheet

A. General

ITB 1.1	The number of the Invitation for Bids is: IDIPT-HP/P3/**NCB/2018-19/01**
ITB 1.1	The Employer is: Himachal Pradesh Tourism Development Board (HPTDB), represented by The Project Director, Infrastructure Development Investment Program for Tourism, Himachal Pradesh, (IDIPT-HP) The Address is: Himachal Pradesh Tourism Development Board (HPTDB) Department of Tourism and Civil Aviation First Floor, U.S. Club Shimla – 171 001, HP, India. Tel: +91-177-2659962, 2659926, Fax: +91-177-2659925 Email: projectdirector.adbhp@gmail.com
ITB 1.1	The name of the bidding process is: **National Competitive Bidding (NCB)** The name of sub-project: **Creation of Tourist Cultural Centre, Janjehli, District Mandi** The Identification Number of the bidding process is: **HPTDB/15/2** The number and identification of lots comprising this bidding process is: **One**
ITB 2.1	The Borrower is: **India**
ITB 2.1	The name of the Project is: **ADB Loan No. 3223–IND, Infrastructure Development Investment Program for Tourism, Tranche 3.**

B. Contents of Bidding Documents

ITB 7.1	For **clarification purposes** only, the Employer's address is: **Attention:** **The Project Director**, Infrastructure Development Investment Program for Tourism, Himachal Pradesh (IDIPT-HP) Himachal Pradesh Tourism Development Board (HPTDB), Department of Tourism and Civil Aviation First Floor, U.S. Club Shimla – 171 001, HP, India. Tel: +91-177-2659962, 2659926, Fax: +91-177-2659925 Electronic mail address: projectdirector.adbhp@gmail.com Requests for clarification should be received by the Employer no later than 14 days before bid submission deadline (between 10:00 AM - 5:00 PM on working days) i.e.02 May 2018
ITB 7.4	A **Pre-Bid meeting will take place** on **Date: 28 April 2018, Time: 11:00 hrs** Place: The Project Director, Infrastructure Development Investment Program for Tourism, Himachal Pradesh (IDIPT-HP) Himachal Pradesh Tourism Development Board (HPTDB), Department of Tourism and Civil Aviation, First Floor, U.S. Club Shimla – 171 001, HP, India. The interested bidders shall visit the site, observe ground conditions & satisfy themselves about the suitability and sufficiency of availability of the construction materials, disposal of waste materials, etc. before quoting the rates.

C. Preparation of Bids

ITB 10.1	The language of the bid is: **English**
ITB 11.2 (g)	The Bidder shall submit with its Technical Bid the following additional documents: 1. A legally notarized or attested by appropriate authority in the bidders' home country and valid joint venture consortium agreement or a formal Intent to enter into a JV agreement if applicable, specifying the financial stakes of each of the joint venture partner; 2. Audited and certified (by a notary) balance sheets of bidder for the last three financial years and 3. For Joint venture Bidders, either (a) copy of the Joint Venture Agreement (duly notarized or attested to by the appropriate authority in the bidder's home country), or (b) a formal Letter of Intent to enter into an JV agreement if it is awarded the Contract (duly notarized or attested to by the appropriate authority in the bidder's home country).
ITB 11.3 (d)	The Bidder shall submit with its Price Bid the following additional documents: **Nil.**
ITB 13.1	Alternative bids **will not** be permitted.
ITB 13.2	Alternative times for completion **will not** be permitted.
ITB 13.4	Alternative technical solutions shall be permitted for the following parts of the Works: **None**
ITB 14.5	The prices quoted by the Bidder shall not be **subject to price adjustment during the performance of the contract.** The indices and weightage of various components shall be as indicated in the Section-8 (PCC)
ITB 14.7	The bidders are also advised to familiarize themselves with local tax laws and statutory taxes such as Income Tax, GST, Applicable Cess/Sur charges, etc. The quoted price shall be inclusive of GST and other applicable taxes.
ITB 15.1	The unit rates & the prices shall be quoted by the bidder and shall be paid in **Indian Rupees (INR)**
ITB 18.1	The bid validity period shall be **One hundred twenty (120) days from the date of opening the bids.**
ITB 19.1	The Bidder shall furnish a bid security in the amount of **INR 55 Lakhs.** If the institution issuing the Security is located outside India, it shall have a correspondent financial institution located in the territory of India to make it enforceable. Bid securing declaration shall not be accepted.
ITB 19.2	The ineligibility period will be – **not applicable**-
ITB 19.3	The bid security in the form of Banker's cheque / Demand Draft (DD) shall not be acceptable. The bid security shall be in the form of unconditional irrevocable bank guarantee / fixed deposit receipts.
ITB 20.1	In addition to the original of the bid, the number of copies is: **One**
ITB 20.2	The written confirmation of authorization to sign on behalf of the Bidder shall consist of: (a) for single entity, it shall consist of Power Of Attorney containing name, position held and signature of authorized person or (b) In case of JV or proposed JV, the Power of Attorney for authorization shall be issued in the name of a nominated representative who shall have the authority to sign and conduct all business for and on behalf of JV during contract execution.

D. Submission and Opening of Bids

ITB 21.1	Bidders ***shall not*** have the option of submitting their bids electronically.
ITB 22.1	For **bid submission purposes** only, the Employer's address is: **Attention:** **The Project Director,** Infrastructure Development Investment Program for Tourism, Himachal Pradesh (IDIPT-HP) Himachal Pradesh Tourism Development Board (HPTDB) Department of Tourism and Civil Aviation, First Floor, U.S. Club Shimla – 171 001, HP, India. **The deadline for bid submission is: Date: 16 May 2018 Time: 15:00 Hours.**
ITB 25.1	The opening of the Technical Bid shall take place at Office of **:** **The Project Director,** Infrastructure Development Investment Program for Tourism, Himachal Pradesh (IDIPT-HP) Himachal Pradesh Tourism Development Board (HPTDB) Department of Tourism and Civil Aviation, First Floor, U.S. Club Shimla – 171 001, HP, India **Date**: **16 May 2018; Time: 15.30 Hours.**
ITB 25.5	The Letter of Technical Bid shall be initialed by the Project Director, IDIPT-HP and representatives of the Employer attending Bid Opening.
ITB 25.10	The Letter of Price Bid and Schedules shall be initialed by the Project Director, IDIPT-HP and representatives of the Employer attending Bid Opening.
ITB 30.5	Add following phrase at the end of sub-clause: The bid shall be for the whole of the works. Bids for selected part or parts of the works not comprising the whole of the works shall be held nonresponsive.

E. Evaluation and Comparison of Bids

ITB 34.1	The currency that shall be used for bid evaluation and comparison purposes to convert all bid prices expressed in various currencies into a single currency is: **Not applicable**
ITB 35.1	**A margin of preference shall not apply.**

Blank Page

Section 3

Evaluation and Qualification Criteria (EQC)

Blank Page

Section 3 - Evaluation and Qualification Criteria

- Postqualification -

Table of Criteria

1. Evaluation 3-2
1.1 Adequacy of Technical Proposal 3-2
1.2 Multiple Contracts 3-2
1.3 Completion Time 3-2
1.4 Technical Alternatives 3-2
1.5 Quantifiable Nonconformities, Errors and Omissions 3-3
1.6 Margin of Preference 3-3

2. Qualification 3-4
2.1 Eligibility 3-4
2.1.1 Nationality 3-4
2.1.2 Conflict of Interest 3-4
2.1.3 ADB Eligibility 3-4
2.1.4 Government-Owned Entity 3-4
2.1.5 United Nations Eligibility 3-4

2.2 Pending Litigation 3-5
2.2.1 Pending Litigation and Arbitration 3-5

2.3 Financial Requirements 3-6
2.3.1 Historical Financial Performance 3-6
2.3.2 Average Annual Construction Turnover 3-6
2.3.3 Financial Resources Requirement 3-7

2.4 Construction Experience 3-8
2.4.1 Contracts of Similar Size and Nature 3-8
2.4.2 Construction Experience in Key Activities 3-9

1. Evaluation

In addition to the criteria listed in ITB 36.2 (a) – (e) the following criteria shall apply:

1.1 Adequacy of Technical Proposal

Evaluation of the Bidder's Technical Proposal will include an assessment of the Bidder's technical capacity to mobilize key equipment and personnel for the contract consistent with its proposal regarding work methods, scheduling, and material sourcing in sufficient detail and fully in accordance with the requirements stipulated in Section 6 (Employer's Requirements).

Non-compliance with equipment and personnel requirements described in Section 6 (Employer's Requirements) shall not normally be a ground for bid rejection and such non-compliance will be subject to clarification during bid evaluation and rectification prior to contract award.

1.2 Multiple Contracts

Works are grouped in multiple contracts and pursuant to ITB 36.4, the Employer will evaluate and compare Bids on the basis of a contract, or a combination of contracts, or as a total of contracts in order to arrive at the least cost combination for the Employer by taking into account discounts offered by Bidders in case of award of multiple contracts.

If a Bidder submits several successful (lowest evaluated substantially responsive) bids, the evaluation will also include an assessment of the Bidder's capacity to meet the following aggregated requirements as presented in the bid:

- Construction Experience (value of similar contracts previously undertaken by the Bidder),
- Financial Resources Requirements,
- Equipment to be allocated, and
- Personnel to be fielded

1.3 Completion Time

Not Applicable

1.4 Technical Alternatives

Not Applicable

1.5 Quantifiable Nonconformities, Errors and Omissions

The evaluated cost of quantifiable nonconformities, errors and/or omissions are determined as follows:

Pursuant to ITB 31.3, the cost of all quantifiable nonmaterial nonconformities or omissions shall be evaluated. The Employer will make its own assessment of the cost of any nonmaterial nonconformities and omissions for the purpose of ensuring fair comparison of bids.

1.6 Margin of Preference (Applicable for ICB only)

Not applicable

2. Qualification

Unless specifically indicated otherwise, it is the legal entity or entities comprising the Bidder, and not the Bidder's parent companies, subsidiaries or affiliates, that must satisfy the qualification criteria described below.

2.1 Eligibility

Criteria	Compliance Requirements				Documents
Requirement	Single Entity	Joint Venture			Submission Requirements
		All Partners Combined	Each Partner	One Partner	
2.1.1 Nationality					
Nationality in accordance with ITB Sub-Clause 4.2.	must meet requirement	must meet requirement	must meet requirement	not applicable	Forms ELI - 1; ELI - 2 with attachments
2.1.2 Conflict of Interest					
No conflicts of interest in accordance with ITB Sub-Clause 4.3.	must meet requirement	must meet requirement	must meet requirement	not applicable	Letter of Technical Bid
2.1.3 ADB Eligibility					
Not having been declared ineligible by ADB, as described in ITB Sub-Clause 4.4.	must meet requirement	must meet requirement	must meet requirement	not applicable	Letter of Technical Bid
2.1.4 Government-Owned Entity					
Bidder required to meet conditions of ITB Sub-Clause 4.5.	must meet requirement	must meet requirement	must meet requirement	not applicable	Forms ELI - 1; ELI - 2 with attachments
2.1.5 United Nations Eligibility					
Not having been excluded by an act of compliance with a UN Security Council resolution or Employer's country law, as described in ITB Sub-Clause 4.7.	must meet requirement	must meet requirement	must meet requirement	not applicable	Letter of Technical Bid

2.2 Pending Litigation

Pending Litigation criterion shall apply.

2.2.1 Pending Litigation and Arbitration

Criteria	Compliance Requirements				Documents
Requirement	Single Entity	Joint Venture			Submission Requirements
		All Partners Combined	Each Partner	One Partner	
All pending litigation and arbitration, if any, shall be treated as resolved against the Bidder and so shall in total not represent more than **Fifty (50)** percent of the Bidder's net worth calculated as the difference between total assets and total liabilities should be positive.	must meet requirement by itself or as partner to past or existing JV	not applicable	must meet requirement by itself or as partner to past or existing JV	not applicable	Form LIT - 1

2.3 Financial Requirements

2.3.1 Historical Financial Performance

Criteria	Compliance Requirements				Documents
Requirement	Single Entity	Joint Venture			Submission Requirements
		All Partners Combined	Each Partner	One Partner	
Submission of audited financial statements or, if not required by the law of the Bidder's country, other financial statements acceptable to the Employer, for the last **Three years** to demonstrate the current soundness of the Bidders financial position. As a minimum, the Bidder's net worth for the last year, calculated as the difference between total assets and total liabilities should be positive.	must meet requirement	not applicable	must meet requirement	not applicable	Form FIN - 1 with attachments

2.3.2 Average Annual Construction Turnover

Criteria	Compliance Requirements				Documents
Requirement	Single Entity	Joint Venture			Submission Requirements
		All Partners Combined	Each Partner	One Partner	
Minimum average annual construction turnover of **INR 36.3 Crores**, calculated as total certified payments received for contracts in progress or completed, within the last **three** years.	must meet requirement	must meet requirement	must meet 25% of the requirement	must meet 40% of the requirement	Form FIN - 2

2.3.3 Financial Resources Requirement

Criteria	Compliance Requirements				Documents
Requirement	Single Entity	Joint Venture			Submission Requirements
		All Partners Combined	Each Partner	One Partner	
Using Forms FIN-3 and FIN-4 in Section 4 (Bidding Forms), the Bidder must demonstrate access to, or availability of, liquid assets[1], lines of credit, or other financial resources (other than any contractual advance payments) to meet the Bidder's financial resources requirement indicated in Form FIN-4.	must meet requirement	must meet requirement	must meet 25% of the requirement	must meet 40% of the requirement	Form FIN – 3 and Form FIN – 4

[1] *Liquid Assets mean cash and cash equivalents, short-term financial instruments, short term available-for-sale-securities, marketable securities, trade receivables, short-term financing receivables and other assets that can be converted into cash within ONE YEAR.*

2.4 Construction Experience

2.4.1 Contracts of Similar Size and Nature

Criteria	Compliance Requirements				Documents
Requirement	Single Entity	Joint Venture			Submission Requirements
		All Partners Combined	Each Partner	One Partner	
Participation in at least one contract that have been successfully or substantially completed within the last Five (5) years and that are similar to the proposed works, where the value of the Bidder's participation exceeds **INR 21.8 Crores**. The similarity of the Bidder's participation shall be based on the physical size, nature of works, complexity, methods, technology or other characteristics as described in Section 6 (Employer's Requirements).	must meet requirement	not applicable	not applicable	must meet requirement	Form EXP -1

***** **"***Substantially completed" means i) the work is sufficiently completed in accordance with the contract documents so the Employer can occupy or utilize the work for its intended use and ii) despite completion of the work, the work did not become the property of or utilized by the Employer for any reason beyond the control of parties to the contract.*

2.4.2 Construction Experience in Key Activities (May be complied by Specialist Subcontractors. Employer shall require evidence of subcontracting agreement from the Bidder. Specialist Subcontractor is a specialist enterprise engaged for highly specialized processes which cannot be provided by the main Contractor.**)**

Criteria	Compliance Requirements				Documents
Requirement	Single Entity	Joint Venture			Submission Requirements
		All Partners Combined	Each Partner	One Partner	
For the above or other contracts executed during the period stipulated in 2.4.1 above, a minimum construction experience in the following key activities:	must meet requirements	must meet requirements	not applicable	not applicable	Form EXP - 2
Construction of buildings and related internal infrastructure					

Blank Page

Section 4

Bidding Forms (BDF)

Blank Page

Section 4 - Bidding Forms

Table of Forms

Letter of Technical Bid **4-2**

Bid Security **4-3**

Bid Securing Declaration **4-4**

Technical Proposal **4-5**

Personnel 4-6
Form PER – 1: Proposed Personnel 4-6
Form PER – 2: Resume of Proposed Personnel 4-7
Equipment 4-8
Site Organization 4-9
Method Statement 4-9
Mobilization Schedule 4-9
Construction Schedule 4-9

Bidder's Qualification **4-10**

Form ELI - 1: Bidder's Information Sheet 4-11
Form ELI - 2: JV Information Sheet 4-12
Form LIT - 1: Pending Litigation and Arbitration 4-13
Form FIN - 1: Historical Financial Performance 4-14
Form FIN - 2: Average Annual Construction Turnover 4-15
Form FIN - 3: Availability of Financial Resources 4-16
Form FIN- 4: Financial Resources Requirement 4-17
Form EXP - 1: Contracts of Similar Size and Nature 4-18
Form EXP -2: Construction Experience in Key Activities 4-19

Schedules **4-20**

Schedule of Payment Currencies 4-20
Tables of Adjustment Data 4-21
Activity Schedule 4-22

Letter of Technical Bid

Date: dd-mm-yyyy
Invitation for Bid No.: IDIPT-HP/P3/NCB/2018-19/01
NCB **No.: HPTDB/15/2**

To

The Project Director,
Infrastructure Development Investment Program for Tourism, Himachal Pradesh (IDIPT-HP),
Himachal Pradesh Tourism Development Board (HPTDB),
Department of Tourism and Civil Aviation
First Floor, U.S. Club
Shimla – 171 001, HP, India

We, the undersigned, declare that:

(a) We have examined and have no reservations to the Bidding Documents, including Addenda issued in accordance with Instructions to Bidders (ITB) 8;

(b) We offer to execute in conformity with the Bidding Documents the following Works: "**Creation of Tourist Cultural Centre, Janjehli, District Mandi**" (Contract Package No. **HPTDB/15/2**).

(c) Our Bid consisting of the Technical Bid and the Price Bid shall be valid for a period of 120 days from the date fixed for the bid submission deadline in accordance with the Bidding Documents, and it shall remain binding upon us and may be accepted at any time before the expiration of that period;

(d) Our firm, including any subcontractors or suppliers for any part of the Contract, have nationalities from eligible countries in accordance with ITB 4.2;

(e) We, including any subcontractors or suppliers for any part of the contract, do not have any conflict of interest in accordance with ITB 4.3;

(f) We are not participating, as a Bidder in more than one bid in this bidding process in accordance with ITB 4.3(e), other than alternative offers submitted in accordance with ITB 13;

(g) Our firm, its affiliates or subsidiaries, including any Subcontractors or Suppliers for any part of the contract, has not been declared ineligible by ADB, under the Employer's country laws or official regulations or by an act of compliance with a decision of the United Nations Security Council;

(h) We are not a government owned entity / We are a government owned entity but meet the requirements of ITB4.5; [1]

(i) We agree to permit ADB or its representative to inspect our accounts and records and other documents relating to the bid submission and to have them audited by auditors appointed by ADB.

(j) If our Bid is accepted, we commit to mobilizing key equipment and personnel in accordance with the requirements set forth in Section 6 (Employer's Requirements) and our technical proposal, or as otherwise agreed with the Employer.

Name .....

In the capacity of .....

Signed .....

Duly authorized to sign the Bid for and on behalf of .....

Date.....

1 Use one of the two options as appropriate

Bid Security

Bank Guarantee

..... Bank's Name, and Address of Issuing Branch or Office.....

Beneficiary: *.....Name and Address of Employer.....*

Date:.....

Bid Security No.:.....

We have been informed that . . . . . *name of the Bidder*. . . . . (herein after called "the Bidder") has submitted to you its bid dated . . . . . (herein after called "the Bid") for the execution of . . . . . *name of contract* . . . . . under Invitation for Bids No. . . . . ("the IFB").

Furthermore, we understand that, according to your conditions, bids must be supported by a bid guarantee.

At the request of the Bidder, we . . . . . *name of Bank*. . . . . hereby irrevocably undertake to pay you any sum or sums not exceeding in total an amount of . . . . . *amount in figures* . . . . . (. . . . . *amount in words* . . . . .)upon receipt by us of your first demand in writing accompanied by a written statement stating that the Bidder is in breach of its obligation(s) under the bid conditions, because the Bidder:

(a) has withdrawn its Bid during the period of bid validity specified by the Bidder in the Letter of Technical Bid and Letter of Price Bid; or

(b) does not accept the correction of errors in accordance with the Instructions to Bidders (hereinafter "the ITB"); or

(c) having been notified of the acceptance of its Bid by the Employer during the period of bid validity, (i) fails or refuses to execute the Contract Agreement, or (ii) fails or refuses to furnish the Performance Security, in accordance with the ITB, or (iii) fails or refuses to furnish the domestic preference security, if required.

This guarantee will expire: (a) if the Bidder is the successful Bidder, upon our receipt of copies of the Contract Agreement signed by the Bidder and the performance security issued to you upon the instruction of the Bidder; and (b) if the Bidder is not the successful Bidder, upon the earlier of (i) our receipt of a copy your notification to the Bidder of the name of the successful Bidder; or (ii) twenty-eight days (28) after the expiration of the Bidder's bid.

Consequently, any demand for payment under this guarantee must be received by us at the office on or before that date.

This guarantee is subject to the Uniform Rules for Demand Guarantees, ICC Publication No. 458[1].

. . . . . *Bank's seal and authorized signature(s)* . . . . . .

-- Note --

All italicized textis for use in preparing this form and shall be deleted from the final document. [1]*Or 758 as applicable.*

Bid Securing Declaration

Date: _____

Bid No.: _____

Alternative No.: [insert identification No if this is a Bid for an alternative]

To: [insert complete name of Employer]

We, the undersigned, declare that:

We understand that, according to your conditions, bids must be supported by a Bid Securing Declaration.

We accept that we will automatically be suspended from being eligible for bidding in any contract with the Borrower for the period of time of *[insert the number of months or years indicated in ITB 19.2 of the BDS]* starting on the date that we receive a notification from the Employer, if we are in breach of our obligation(s) under the bid conditions, because we:

(a) have withdrawn our Bid during the period of bid validity specified in the Letter of Technical Bid and Letter of Price Bid; or

(b) do not accept the correction of errors in accordance with the Instruction to Bidders (hereinafter "the ITB"); or

Not Applicable

(c) having been notified of the acceptance of our Bid by the Employer during the period of bid validity, (i) fail or refuse to execute the Contract, if required, (ii) fail or refuse to furnish the Performance Security, in accordance with the ITB, or (iii) fail or refuse to furnish the Domestic Preference Security, if required.

We understand this Bid Securing Declaration shall expire if we are not the successful Bidder, upon the earlier of (i) our receipt of your notification to us of the name of the successful Bidder; or (ii) twenty-eight days (28) after the expiration of our Bid.

Signed: _____

In the capacity of _____

Name: _____

Duly authorized to sign the bid for and on behalf of:

Dated on _____ day of _____, _____

Corporate Seal

-- Note --

In case of a Joint Venture, the Bid-Securing Declaration must be in the name of all partners to the Joint Venture that submits the bid.

Technical Proposal

Personnel

Equipment

Site Organization

Method Statement

Mobilization Schedule

Construction Schedule

Technical Proposal - Personnel

Form PER – 1: Proposed Personnel
Bidder shall provide the details of the proposed personnel and their experience records in the relevant Information Forms below for each candidate:

1.	**Title of position***
	Name
2.	**Title of position***
	Name
3.	**Title of position***
	Name
4.	**Title of position***
	Name
5	**Title of position***
	Name
6	**Title of position***
	Name

*As listed in Section 6 (Employer's Requirements).

Form PER – 2: Resume of Proposed Personnel

The Bidder shall provide all the information requested below.

Position		
Personnel information	**Name**	**Date of birth**
	Professional qualifications	
Present employment	**Name of employer**	
	Address of employer	
	Telephone	**Contact (manager / personnel officer)**
	Fax	**E-mail**
	Job title	**Years with present employer**

Summarize professional experience in reverse chronological order. Indicate particular technical and managerial experience relevant to the project.

From	To	Company / Project / Position / Relevant Technical and Management Experience

Technical Proposal - Equipment

Form EQU: Equipment

1. The Bidder shall provide adequate information and details to demonstrate clearly that it has the capability to meet the equipment requirements indicated in Section 6 (Employer's Requirements), using the Forms below. A separate Form shall be prepared for each item of equipment listed, or for alternative equipment proposed by the Bidder.

Item of Equipment		
Equipment Information	**Name of manufacturer**	**Model and power rating**
	Capacity	**Year of manufacture**
Current Status	**Current location**	
	Details of current commitments	
Source	**Indicate source of the equipment** ☐ **Owned** ☐ **Rented** ☐ **Leased** ☐ **Specially manufactured**	

Omit the following information for equipment owned by the Bidder.

Owner	**Name of owner**	
	Address of owner	
	Telephone	**Contact name and title**
	Fax	**Telex**
Agreements	**Details of rental / lease / manufacture agreements specific to the project**	

Technical Proposal – Site Organization

The Bidder shall supply a table of personnel and a chart showing the proposed organization to be established for carrying out the construction works during all phases of works like mobilization; preparation of Service Improvement Plan; execution period and defects liability period separately.

Technical Proposal – Method Statement

The activities for methodology shall include following:

(i) Surveys or confirmatory surveys (as applicable) including topographic, geotechnical, underground utility surveys etc
(ii) Review, verifications and updation of designs;
(iii) Preparation of service improvement plan (SIP), including phasing of works, cost effective value Engineering and drawings
(iv) Implementation schedule along with methodology as per scope of works:
(v) Services during defects liability period:
(vi) Safeguard activities;

Technical Proposal – Mobilization Schedule

The Bidder shall submit mobilization and de-mobilization schedule of personnel and equipment in detail for all phases of works. The mobilization schedule should include mobilization of skilled and unskilled manpower, different machineries and equipment, materials, as required in each Phase.

Technical Proposal – Construction Schedule

The Bidder shall prepare and submit overall construction schedule. The construction schedule shall be designed and documented in a series of tasks and task assignments complete with projected completion target dates by using Gantt charts or CPM/PERT diagrams to allow all factors to know their contribution towards fulfilling the Employer's Requirement.

Bidders Qualification

To establish its qualifications to perform the contract in accordance with Section 3 (Evaluation and Qualification Criteria) the Bidder shall provide the information requested in the corresponding Information Sheets included hereunder.

Form ELI - 1: Bidder's Information Sheet

Bidder's Information	
Bidder's legal name	
In case of JV, legal name of each partner	
Bidder's country of constitution	
Bidder's year of constitution	
Bidder's legal address in country of constitution	
Bidder's authorized representative (name, address, telephone numbers, fax numbers, e-mail address)	

Attached are copies of the following original documents.

- ❑ 1. In case of single entity, articles of incorporation or constitution of the legal entity named above, in accordance with ITB 4.1 and 4.2.
- ❑ 2. Authorization to represent the firm or JV named in above, in accordance with ITB 20.2.
- ❑ 3. In case of JV, letter of intent to form JV or JV agreement, in accordance with ITB 4.1.
- ❑ 4. In case of a government-owned entity, any additional documents not covered under 1 above required to comply with ITB 4.5.

Form ELI - 2: JV Information Sheet

Each member of a JV and Specialist Subcontractor must fill in this form

JV / Specialist Subcontractor Information	
Bidder's legal name	
JV Partner's or Specialist Subcontractor's legal name	
JV Partner's or Specialist Subcontractor's country of constitution	
JV Partner's or Specialist Subcontractor's year of constitution	
JV Partner's or Specialist Subcontractor's legal address in country of constitution	
JV Partner's or Specialist Subcontractor's authorized representative information (name, address, telephone numbers, fax numbers, e-mail address)	
Attached are copies of the following original documents. ❑ 1. Articles of incorporation or constitution of the legal entity named above, in accordance with ITB 4.1 and 4.2. ❑ 2. Authorization to represent the firm named above, in accordance with ITB 20.2. ❑ 3. In the case of government-owned entity, documents establishing legal and financial autonomy and compliance with commercial law, in accordance with ITB 4.5.	

Specialist Subcontractor is a specialist Enterprise engaged for highly specialized processes which cannot be provided by the main Contractor.

Form LIT – 1: Pending Litigation and Arbitration

Each Bidder or member of a JV must fill in this form if so required under Criterion 2.2 of Section 3 (Evaluation and Qualification Criteria).

Pending Litigation and Arbitration

Choose one of the following:

☐ No pending litigation and arbitration.

☐ Below is a description of all pending litigation and arbitration involving the Bidder (or each JV member if Bidder is a Joint Venture).

Year	Matter in Dispute	Value of Pending Claim in US$ Equivalent	Value of Pending Claim as a Percentage of Net Worth

Form FIN - 1: Historical Financial Performance

Each Bidder or member of a JV must fill in this form

Year 1:2014-15	**Year 2:2015-16**	**Year 3:2016-17***

Information from Balance Sheet

Total Assets			
Total Liabilities			
Net Worth			
Current Assets			
Current Liabilities			

Information from Income Statement

Total Revenues			
Profits Before Taxes			
Profits After Taxes			

❑ Attached are copies of financial statements (balance sheets including all related notes, and income statements) for the last three years, as indicated above, complying with the following conditions.

- Unless otherwise required by Section 3 of the Bidding Document, all such documents reflect the financial situation of legal entity or entities comprising the Bidder and not the Bidder's parent companies, subsidiaries or affiliates.
- Historic financial statements must be audited by a certified accountant.
- Historic financial statements must be complete, including all notes to the financial statements.
- Historic financial statements must correspond to accounting periods already completed and audited (no statements for partial periods shall be requested or accepted).

*** In case audited Financial Data for FY 2017-18 is available, the bidders shall submit data accordingly for the last 3 financial years i.e. 2015-16, 2016-17 & 2017-18.**

Form FIN - 2: Average Annual Construction Turnover

Each Bidder or member of a JV must fill in this form

The information supplied should be the Annual Turnover of the Bidder or each member of a JV in terms of the amounts billed to clients for each year for work in progress or completed.

Annual Turnover Data for the Last three years (Construction only)		
S.N.	**Financial Year**	**Amount (Indian Rupees)**
	Average Annual Construction Turnover	

In case of Joint Venture, all the partners of the JV shall provide the information for the same financial periods.

Form FIN – 3: Availability of Financial Resources

Specify proposed sources of financing, such as liquid assets[1], lines of credit, and other financial resources (other than any contractual advance payments) available to meet the financial resources requirement indicated in Form Fin – 4.

Financial Resources		
No.	**Source of financing**	**Amount (INR)**
1		
2		
3		

[1] *Liquid Assets mean cash and cash equivalents, short-term financial instruments, short term available-for-sale-securities, marketable securities, trade receivables, short-term financing receivables and other assets that can be converted into cash within one year.*

- **The available financial resources in the form of bank limits shall be supported with proof of such documents. e.g. Bank Letter**

- **Bidders shall provide breakdown of information on amounts claimed as financial resources (liquid assets) matching them with the balance sheets**

Form FIN- 4: Financial Resources Requirement

Bidder (or each JV partner) should provide information indicated below in order to calculate the aggregated financial resources requirement, which equals the sum of: (i) the Bidder's (or each JV partner's) current commitments on all contracts that have been awarded, or for which a letter of intent or acceptance has been received, or for contracts approaching completion, but for which an unqualified, full completion certificate has yet to be issued and (ii) financial resources requirement for subject contract as determined by the Employer. Bidder must also disclose any other financial obligations that could materially affect the implementation of subject contract if such contract were to be awarded to the Bidder.

Financial Resources Requirement						
No.	**Name of Contract**	**Employer's Contact (Address, Tel, Fax)**	**Contract Completion Date**	**Remaining Contract Period in months (A)[1]**	**Outstanding Contract Value (B)[2]**	**Monthly Financial Resources Requirement (B / A)**
1						
2						
3						
4						
A. Cumulative Financial Resources Requirement for Current Contract Commitments[3]						INR …….
B. Financial Resources Requirement for Subject Contract (Employer to specify)						INR 4.53 Crores
Financial Resources Requirement (Sum of A and B)						**INR …….**

[1] *Remaining contract period to be calculated from 28 days prior to bid submission deadline.*

[2] *Remaining Outstanding Contract Values to be calculated from 28 days prior to the bid submission deadline.*

[3] *Bidder should calculate this amount based on the sum of Monthly Financial Resources Requirements for Each Current Works Contract based on the following calculation:*

$$\frac{\text{Estimated Contract Value (Inclusive of Taxes and Duties)}}{\text{Completion Period in Months}}$$

Bidders must submit an 'Undertaking' saying that all the information provided with the bid documents are true and correct.

The bidders shall also submit the certified copies from Employer / Engineer in Charge of the Work in support of information provided in the Table.

Form EXP – 1: Contracts of Similar Size and Nature

Fill up one (1) form per contract.

Contract of Similar Size and Nature		
Contract No. . . . . **of**	**Contract Identification**	
Award Date		**Completion Date**
Total Contract Amount		**INR**
If partner in a JV or subcontractor, specify participation of total contract amount	**Percent of Total**	**Amount**
Employer's Name **Address** **Telephone/Fax Number** **E-mail**		
Description of the similarity in accordance with Criteria 2.4.1 of Section 3		
Contracts that have been successfully or substantially completed within the last Five (5) years and that are similar to the proposed works, where the value of the Bidder's participation exceeds **INR 21.8 Crores**. The similarity of the Bidder's participation shall be based on the physical size, nature of works, complexity, methods, technology or other characteristics as described in Section 6 (Employer's Requirements).		

The bidder has to submit the certified copies from Employer / Engineer in Charge of the Work.

*** "***Substantially completed" means i) the work is sufficiently completed in accordance with the contract documents so the Employer can occupy or utilize the work for its intended use and ii) despite completion of the work, the work did not become of the property of or utilized by the Employer for any reason beyond the control of parties to the contract.*

Form EXP - 2: Construction Experience in Key Activities

Fill up one (1) form per contract

Contract with Similar Key Activities		
Contract No. . . . . **of**	**Contract Identification**	
Award Date		**Completion Date**
Total Contract Amount		**INR**
If partner in a JV or subcontractor, specify participation of total contract amount	**Percent of Total**	**Amount**
Employer's Name **Address** **Telephone Number** **Fax Number** **E-mail**		
Description of the key activities in accordance with Criteria 2.4.2 of Section 3		
• Construction of buildings and related internal infrastructure		

The bidder has to submit the certified copies from Employer / Engineer in Charge of the Work.

Schedules

Schedule of Payment Currencies

For .....*insert name of Section of the Works*.....

Separate tables may be required if the various sections of the Works (or of the Bill of Quantities) will have substantially different foreign and local currency requirements. In such a case, the Employer should prepare separate tables for each Section of the Works.

	A	B	C	D
Name of Payment Currency	**Amount of Currency**	**Rate of Exchange to Local Currency**	**Local Currency Equivalent C = A x B**	**Percentage of Net Bid Price (NBP) 100xC / NBP**
Local currency		**1.00**		
Foreign Currency #1				
Foreign Currency #2				
Foreign Currency #				
Net Bid Price				**100.00**
Provisional Sums Expressed in Local Currency		**1.00**		
BID PRICE				

NOT APPLICABLE

Table(s) of Adjustment Data

Table A - Local Currency

Index Code	Index Description	Source of Index	Base Value and Date	Local Currency Amount	Weighting (coefficient)
__	Nonadjustable	—	—	—	a: ____
	Labour Component: Consumer Price Index for Industrial Workers for Shimla (HP)	Labour Bureau, Ministry of Labour and Employment, Govt. of India / Reserve Bank of India	Indices applicable on 28 days prior to deadline for bid submission	As per cost of work	b: ____
	Wood Component: Wood (Sub-group Manufacture of Wood and Products of Wood and Cork)	Office of Economic Adviser, Ministry of Commerce and Industry, Govt. of India / Reserve Bank of India	Indices applicable on 28 days prior to deadline for bid submission	As per cost of work	c: ____
	Electrical Component: Electrical (Sub-group Manufacture of Electrical Equipment)	Office of Economic Adviser, Ministry of Commerce and Industry, Govt. of India / Reserve Bank of India	Indices applicable on 28 days prior to deadline for bid submission	As per cost of work	d: ____
	Cement Component: Cement (Sub-Group Manufacture of Other Nonmetallic mineral Products)	Office of Economic Adviser, Ministry of Commerce and Industry, Govt. of India / Reserve Bank of India	Indices applicable on 28 days prior to deadline for bid submission	As per cost of work	e: ____
	Steel Component: Iron & Steel (Sub-Group Manufacture of Basic Metals)	Office of Economic Adviser, Ministry of Commerce and Industry, Govt. of India / Reserve Bank of India	Indices applicable on 28 days prior to deadline for bid submission	As per cost of work	f: ____
	Other Materials Component: Wholesale Price Index (All commodities)	Office of Economic Adviser, Ministry of Commerce and Industry, Govt. of India / Reserve Bank of India	Indices applicable on 28 days prior to deadline for bid submission	As per cost of work	g: ____
			Total		**1.00**

NOT APPLICABLE

Table B - Foreign Currency

Name of Currency: .....

If the Bidder wishes to quote in more than one foreign currency, but in no case more than three, this table should be repeated for each foreign currency.

Index Code	Index Description	Source of Index	Base Value and Date	Bidder's Currency (Unit)	Equivalent in C1	Bidder's Proposed Weighting (coefficient)
	Nonadjustable	—	—	—		a: (by Employer) b: _____ c: _____ d: _____ e: _____
				Total		**1.00**

NOT APPLICABLE

Activity Schedule

[Schedules of Prices – Lump Sum Contract]

The Employer shall indicate the list of major activities comprising the works and the number of measurement units consistent with the description of works, drawings and specifications in Section 6 (Employer'sRequirements). Each work ítem shall be described in sufficient details to provide a clear guidance to Bidders with respect to the type of works, their scope and complexity and compliance with the required standards.

NOT APPLICABLE

Bidders are required to enter the prices against each work item on a lump sum basis. Work ítems against which no lump sum Price is entered by the Bidder will not be paid for by the Employer when executed and shall be deemed covered by other work ítems against which the lump sum prices were entered. The sum of prices entered against each work ítem will represent the total bid price.

The whole cost of complying with the provisions of the Contract shall be included in the Items provided in the Activity Schedule, and where no Items are provided, the cost shall be deemed to be distributed among the Amounts for the related Items of Work.

Section 5

Eligible Countries (ELC)

Blank Page

Section 5 - Eligible Countries

1.	Afghanistan.	35.	Micronesia, Federal States of
2.	Armenia	36.	Mongolia
3.	Australia	37.	Myanmar
4.	Austria	38.	Nauru, Republic of
5.	Azerbaijan	39.	Nepal
6.	Bangladesh	40.	Netherlands
7.	Belgium	41.	New Zealand
8.	Bhutan	42.	Norway
9.	Brunei Darussalam	43.	Pakistan
10.	Cambodia	44.	Palau
11.	Canada	45.	Papua New Guinea
12.	China, People's Republic of	46.	Philippines
13.	Cook Islands	47.	Portugal
14.	Denmark	48.	Samoa
15.	Fiji Islands, Republic of	49.	Singapore
16.	Finland	50.	Solomon Islands
17.	France	51.	Spain
18	Georgia	52.	Sri Lanka
19	Germany	53.	Sweden
20.	Hong Kong, China	54.	Switzerland
21.	India	55.	Tajikistan
22.	Indonesia	56.	Taipei,China
23.	Italy	57.	Thailand
24.	Ireland, Republic of	58.	Timor-Leste, Democratic Republic of
25.	Japan	59.	Tonga
26.	Kazakhstan	60.	Turkey
27.	Kiribati	61.	Turkmenistan
28.	Korea	62.	Tuvalu
29.	Kyrgyz	63.	United Kingdom
30.	Lao People's Democratic Republic	64.	United States of America
31.	Luxembourg	65.	Uzbekistan
32.	Malaysia	66.	Vanuatu
33.	Maldives	67.	Viet Nam
34.	Marshall Islands		

Blank Page

Section 6

Employer’s Requirements (ERQ)

Blank Page

Section 6 –Employer's Requirements

Table of Contents

Specifications 6-2

Drawings 6-284

Supplementary Information Regarding Works To Be Procured.....6-290

Presonnel Requirements.....6-293

Equipment Requirements.....6-294

Appendix 6-1: Environmental Management Plan (Abstract of Initial Environmental Examination)
Appendix 6-2: Due Diligence Report / Resettlement Plan

Specifications

The specifications for the work of "**Creation of Tourist Cultural Centre, Janjehli, District Mandi**", to be followed are as under. The relevant figures as specified herein are attached at the end of Section 6.

A. General

1. Reference mentioned herein shall be applicable to all sub-sections of this Section on Specifications to the extent the context permits and are intended to supplement the provisions in the particular sub-section. In case of any discrepancy/deviation, the provisions in the particular sub-section shall take precedence.
2. The rates for all items of work unless clearly specified otherwise shall include cost of all labor, materials and other inputs involved, complete and as required to the satisfaction of the Engineer, Project Manager / Executive Engineer, PIU as applicable in the execution of the items.
3. The Project Director, HPTDB/Project Manager, PMU when delegated, shall be the sole deciding authority as to the meaning, interpretation and implications for various provisions of the specifications.
4. Wherever any reference is made to any Indian Standard [e.g. Codes/Standards/Manuals of Bureau of Indian Standard (IS), Indian Roads Congress (IRC), Ministry of Road Transport & Highways (MOR&TH), etc., it shall be taken as reference to the latest edition with all amendments issued thereto or revisions thereof if any, up to the date of submission of bid. In the event of any variation between the HP- PWD Specifications or any reference to the CPWD Specifications and the Indian Standard, the former shall take precedence over the latter.
5. The Work shall be carried out in accordance with architectural drawings and structural drawings, to be issued by the Engineer/Project Manager/Executive Engineer, PIU as applicable. The structural and architectural drawings shall have to be properly co-related before executing the Work, and in case of any difference noticed between architectural and structural drawings, final decision, in writing of the Engineer/Project Manager/Executive Engineer, PIU shall be obtained by the Contractor. The Work shall include the sequence of work activities from clearing the site / leveling if any, correctly laying out the structural footprint, all construction activities thereafter, commissioning and handover of the completed Work to the Employer. For items where so required, samples shall be prepared before starting the particular items of Work for the prior approval of the DSC and/or Project Manager / Executive Engineer, PIU, and nothing extra shall be payable on this account.
6. ***Site****:* The 'site' shall mean the land/ or other places on, in, into or through which the Work is to be executed under the Contract or any adjacent land, path or street through which the Work is to be executed under the Contract, or any adjacent land, path or street which may be allotted or used for the purpose of carrying out the Contract.
7. ***Best****:* The word 'best' when used shall mean that in the opinion of the Project Manager / Executive Engineer, PIU as applicable, there is no superior material / article and workmanship obtainable in the market and trade respectively. As far as possible the standard required shall be specified in preference to the word 'best.'
8. ***Department****:* The 'Department' shall mean Himachal Pradesh Tourism Development Board (the Implementing Agency-IA), implementing the Work through the Project Implementation Unit (PIU) as applicable.
9. ***Floors and*** **Levels***:*
    a. Building:
        i. Floor 1 is the lowest floor above the ground level in the building unless otherwise specified in a particular case. The floors above floor 1 shall be numbered in sequence as floor 2, floor 3 and so on. The number shall increase upwards.
        ii. Floor level: For floor 1, top level of finished floor shall be the floor level and for all other floors above floor 1, top level of the structural slabs shall be the floor level.

iii. Plinth level: Floor 1 level or 1.2 m above the ground level whichever is lower shall be the plinth level.

b. Special Structures:

i. For structures like retaining walls, wing walls, chimneys, overhead reservoirs/ tanks and other elevated structures, where elevations/heights above a defined datum level have not been specified and identification of floors cannot be done as in case of building. Level, at 1.2 m above the ground level shall be the floor 1 level as well as plinth level. Level at a height of 3.5 m above floor 1 level will be reckoned as floor 2 level & level at a height of 3.5 m above the floor 2 level will be floor 3 level and so on, where the total height above floor 1 level is not a whole number multiple of 3.5 m. Top most floor level shall be the next in sequence to the floor level below even if the difference in height between 2 upper most floor levels is less than 3.5m.

10. ***Foundation and Plinth***: The work in foundation and plinth shall include:

(a) For buildings: All works upto 1.2 m above ground level or upto floor 1 level whichever is lower.

(b) For abutments, piers and well staining: all works upto 1.2 m above the bed level.

(c) For retaining wall, wing walls, compound walls, chimneys, overhead reservoirs/ tanks and other elevated structures: All works upto 1.2 m above the ground level.

(d) For reservoirs / tanks (other than overhead reservoirs/ tanks): All works upto 1.2 m above the ground level.

(e) For basements: All works upto 1.2 m above ground level or upto floor 1 level whichever is lower.

Note: Specific provision shall be made in the estimate for such situations where the foundation level is more than 3 (three) m depth from the plinth for all types of structures mentioned above.

11. ***Measurements***:

a. In booking dimensions, the order shall be consistent and in the sequence of length, width and height or depth or thickness. The Work shall be executed, measured, and quantity arrived at as per the metric dimension given in the Schedule / Bill of Quantities, drawings etc.

b. Rounding off: Rounding off where required shall be done in accordance with IS: 2-1960. The number of significant places rounded in the rounded off value should be as specified.

12. ***Materials***:

a. Samples of all materials to be used on the Work shall be got approved by the Contractor from the Project Manager/Executive Engineer, PIU as applicable well in time. The approved samples duly authenticated and sealed shall be kept in the custody of the Project Manager / Executive Engineer, PIU till the completion of the Work. All materials to be provided by the Contractor shall be brand new and as per the samples approved by the Project Manager / Executive Engineer, PIU.

b. Materials obtained by the Contractor from the sources approved by the Department shall be subjected to the Mandatory tests. Where such materials do not conform to the relevant specifications, the matter shall be taken up by the Project Manager / Executive Engineer, PIU as applicable for appropriate action against the defaulters. In all such cases, necessary documents in original and proof of payment relating to the procurement of materials shall be made available by the Contractor to the Project Manager / Executive Engineer, PIU.

c. Samples, whether submitted for approval to govern bulk supplies or required for testing before use and also the sample of materials bearing 'Standard Mark,' if required for testing, shall be provided free of cost by the Contractor. All other incidental expenditure to be incurred for testing of samples e.g. packaging, sealing, transportation, loading, unloading etc. to the satisfaction of Design and Supervision Consultant (DSC) and/or Project Manager / Executive Engineer, PIU shall be borne by the Contractor.

d. Materials stored at site, depending upon the individual characteristics, shall be protected from atmospheric effects due to rain, sun, wind and moisture to avoid deterioration.

e. Materials like timber, paints etc. shall be stored in such a way that there may not be any possibility of fire hazards. Inflammable materials and explosives shall be stored in accordance

with the relevant rules and regulations or as approved by Project Manager / Executive Engineer, PIU as applicable in writing so as to ensure desired safety during storage.

13. ***Safety in Construction***:

a. The Contractor shall employ only such methods of construction, tools and plant as are appropriate for the type of work or as approved by Project Manager / Executive Engineer, PIU as applicable in writing.

b. The Contractor shall take all precautions & measures to ensure safety of works & workman and shall be fully responsible for the same. Safety pertaining to construction works such as excavation, centring & shuttering, trenching, blasting if any, demolition, electric connections, scaffolds, ladders, working platforms, gangway, mixing of bituminous materials, electric & gas welding, use of hoisting & construction machinery shall be governed by HP PWD Safety Code, relevant safety codes and the direction of Project Manager/Executive Engineer, PIU as applicable.

14. *An Indicative List of Codes*

An indicative list of Bureau of Indian Standards (BIS) IS Codes and IRC codes to be followed is as under, unless otherwise specified in the work item in technical specifications.

S. N.	Material/Work Type	IS Code	IS Code Name
1	Earth Work	IS: 1498-1970	Classification and identification of soils for general engineering purposes
		IS: 3764-1992	Safety code for excavation work
2	Form Work	IS: 1730-1989	Dimensions for steel plates, sheets strips and flats for general engineering purposes
		IS: 808-1989	Dimensions for Hot Rolled Steel Beam, Column, Channel and Angle Sections
		IS: 723-1972	Specification for Steel Countersunk Head Wire Nails
		IS: 401-2001	Preservation of timber - Code of practice
		IS: 3337-1978	Specification for ballies for general purposes
3	Aggregates	IS: 383-1970	Specification for coarse and fine aggregates from natural sources for concrete
		IS: 460-1985 (relevant parts)	Specification for test sieves
		IS: 1542-1992	Specification for sand for plaster
		IS: 2116-1980	Specification for sand for masonry mortars
4	Concrete Works	IS: 456-2000	Plain and Reinforced Concrete - Code of Practice
		IS: 516-1959	Method of tests for strength of concrete
		IS: 1199-1959	Methods of sampling and analysis of concrete
		IS: 2386-1963 (Part 1)	Methods of Test for Aggregates for Concrete - Part 1: Particle Size and Shape
		IS: 2386-1963 (Part 2)	Methods of test for Aggregates for Concrete - Part 2: Estimation of deleterious materials and organic impurities
		IS: 2386-1963 (Part 3)	Methods of test for Aggregates for Concrete - Part 3: Specific gravity, density, voids, absorption and bulking
		IS: 2386-1963 (Part 4)	Methods of test for Aggregates for Concrete - Part 4: Mechanical properties
		IS: 2386-1963 (Part 5)	Methods of test for Aggregates for Concrete - Part 5: Soundness
		IS: 2386-1963 (Part 6)	Methods of test for Aggregates for Concrete - Part 6: Measuring mortar making properties of fine aggregates
		IS: 2645-2003	Integral Waterproofing Compounds for Cement Mortar and Concrete – Specification
		IS: 3812-2003	Pulverized Fuel Ash - Specification - Part 1: For Use as

S. N.	Material/Work Type	IS Code	IS Code Name
		(Part 1)	Pozzolana in Cement, Cement Mortar and Concrete
		IS: 3812-2003 (Part 2)	Pulverized Fuel Ash - Specification - Part 2: For Use as Admixture in Cement Mortar and Concrete
		IS: 334-2002	Glossary of Terms Relating to Bitumen and Tar
		IS: 1203-1078	Determination of softening point for penetration test (See IS: 1201 to IS: 1220)
		IS: 1205-1978	Determination of softening point (See IS:1201-IS: 1220)
		IS: 1209-1978	Determination of flash point and fire point - (See IS: 1201 to IS: 1220)S
		IS: 1834-1984	Specification for Hot Applied Sealing Compounds for Joints in Concrete
		IS: 1838-1983 (Part 1)	Specification for preformed fillers for expansion joint in concrete pavement and structures (non-extruding and resilient type) - Part 1: Bitumen impregnated fibre
		IS: 1838-1984 (Part 2)	Specification for preformed fillers for expansion joint in concrete pavement & structure (non extruding & resilient type) Part 2 CNSL Aldehyde resin & coconut pith
		IS: 3384-1986	Specification for bitumen primer for use in waterproofing and damp-proofing
5	Ordinary Portland Cement (OPC) for Masonry and PCC works	IS: 269-1989	Specification for 33 grade Ordinary Portland Cement
		IS: 455-1989	Specification for Portland Slag Cement
		IS: 3466-1988	Specification for masonry cement
		IS: 8042-1989	White Portland Cement - Specification
		IS: 8112-1989	Specification for 43 grade Ordinary Portland Cement
6	Ordinary Portland Cement (OPC) for RCC works	IS: 12269-1987	Specification for 53 grade Ordinary Portland Cement
7	Portland Pozzolana Cement (PPC) for other concrete work	IS: 1489-1991 (relevant parts)	Specification for Portland Pozzolana Cement
8	MS bars and wires	IS: 280-2006	Mild Steel Wire for General Engineering Purposes
		IS: 432-1982 (Part 1)	Specification for mild steel and medium tensile steel bars and hard-drawn steel wire for concrete reinforcement–Mild steel and medium tensile steel bars
		IS: 432-1982 (Part 2)	Specification for mild steel and medium tensile steel bars and hard-drawn steel wire for concrete reinforcement–Hard-drawn steel wire
		IS: 1139-1966	Hot rolled mild steel, medium tensile steel and high yield strength steel deformed bars for concrete reinforcements
		IS: 1566-1982	Specification for hard-drawn steel wire fabric for concrete reinforcement
		IS: 1599-1985	Method for bend test
		IS: 1608-2005	Mechanical testing of metals - Tensile Testing
9	Reinforcement Steel – Tor Steel (cold twisted deformed bars)	IS: 1786-2008	High strength deformed steel bars and wires for concrete reinforcement – Specification
10	Stone Work	IS: 1121-1974 (Part 1 to 4)	Methods of test for determination of strength properties of natural building stones: Part 1 - Compressive

S. N.	Material/Work Type	IS Code	IS Code Name
			strength, Part 2 - Transverse Strength, Part 3 - Tensile Strength, Part 4 - Shear strength
		IS: 1122-1974	Method of test for determination of true specific gravity of natural building stones
		IS: 1123-1975	Method of identification of natural building stones
		IS: 1124-1974	Method of test for determination of water absorption, apparent specific gravity and porosity of natural building stones
		IS: 1125-1974	Method of test for determination of weathering of natural building stones
		IS: 1126-1974	Method of test for determination of durability of natural building stones
		IS: 1127-1970	Recommendations for dimensions and workmanship of natural building stones for masonry work
		IS: 1129-1972	Recommendation for dressing of natural building stones
		IS: 1597-1992 (Part 1 to 2)	Construction of Stone Masonry - Code of Practice: Part 1 - Rubble Stone Masonry, Part 2 - Ashlar masonry
		IS: 1805-1973	Glossary of terms relating to stones, quarrying and dressing
		IS: 4101-1967 (Part 1)	Code of practice for External Facings and Veneers: Part 1 - Stone facing
		IS: 4101-1967 (Part 3)	Code of Practice for External Cladding: Part 3 - Wall Tiling and Mosaics
11	Brick Work	IS: 1077-1992	Common burnt clay building bricks – Specification
		IS: 2212-1991	Code of practice for brickworks
		IS: 3495-1992 (Part 1 to 4)	Methods of tests of burnt clay building bricks: Part 1 - Determination of compressive strength, Part 2 - Determination of water absorption, Part 3-Determination of efflorescence, Part 4 - Determination of warpage
		IS: 5454-1978	Methods of sampling of clay building bricks
12	Structural Steel & Fasteners	IS: 226-1975	Structural steel (Standard quality)
		IS: 800-2007	General Construction in Steel - Code of Practice
		IS: 823-1964	Code of procedure for manual metal arc welding of mild steel
		SP: 6 (Part 1)-1964	Handbook for Structural Engineers – 1: Structural Steel Sections
		IS: 1148-1982	Hot-rolled rivet bars (upto 40 mm dia) for structural purposes
		IS: 1149-1982	High tensile steel rivet bars for structural purposes
		IS: 1161-1998	Steel Tubes for Structural Purposes – Specification
		IS: 1363-2002 (relevant parts)	Hexagon Head Bolts, Screws and Nuts of Product Grade `C'
		IS: 1367 (relevant parts)	Technical Supply Conditions for Threaded Steel Fasteners
		IS: 1977-1996	Low Tensile Structural Steels – Specification
		IS: 2062-2006	Hot Rolled low, medium and high tensile structural steel
13	Welding Steel work	IS: 813-1986	Scheme of symbols for welding
		IS: 814-2004	Covered Electrodes for Manual Metal Arc Welding of Carbon and Carbon Manganese Steel - Specification
		IS: 816-1969	Code of practice for use of metal arc welding for

S. N.	Material/Work Type	IS Code	IS Code Name
			general construction in mild steel
		IS: 817-1966	Code of practice for training and testing of metal arc welders
		IS: 818-1968	Code of Practice for Safety and Health Requirements in Electric and Gas Welding and Cutting Operations
		IS: 822-1970	Code of Procedure for inspect of welds
		IS: 1182-1983	Recommended practice for radiographic examination of fusion welded butt joints in steel plates
		IS: 6227-1971	Code of practice for use of metal arc welding in tubular structure
		IS: 9595-1996	Metal arc welding of carbon and carbon manganese steels - Recommendations
14	Flooring Work	IS: 777-1988	Glazed earthenware wall tiles
		IS: 2571-1970	Code of practice for laying in-situ cement concrete flooring
		IS: 13630-2006 (relevant parts)	Ceramic Tiles - Methods of Test, Sampling and Basis for Acceptance
		IS: 13712-2006	Ceramic tiles - Definitions, classifications, characteristics and marking
		IS: 15622-2006	Pressed ceramic tiles - Specification
15	Plastering and Distempering Work	IS: 1630-1984	Specification for mason's tools for plaster work and pointing work
		IS: 1635-1992	Code of practice for field slaking of building lime and preparation of putty
		IS: 2402-1963	Code of Practice for External Rendered Finishes
		IS: 428-2000	Washable Distemper - Specification
16	Wood Work	IS: 287-1993	Permissible moisture content for timber used for different purposes – Recommendations
		IS: 419-1967	Putty, for use on window frames
		IS: 852-1994	Animal glue for general wood-working purposes – Specification
		IS: 1003-2003 (Part 1)	Timber Panelled and Glazed Shutters - Part 1: Door shutters - Specification
		IS: 1003-1994 (Part 2)	Specification for timber panelled and glazed shutters - Part 2: Windows and ventilator shutters
		IS: 1141-1993	Seasoning of timber - Code of practice
		IS: 1341-1992	Steel butt hinges – Specification
		IS: 207-1964	Specification for Gate and Shutter Hooks and Eyes
		IS: 208-1996	Door handles – Specification
		IS: 281-2009	Mild Steel Sliding Door Bolts for use with Padlocks – Specification
		IS: 1823-1980	Specification for floor door stoppers
		IS: 2380 (relevant parts)	Methods of Test for Wood Particle Boards and Boards from Other Lignocellulose Materials
		IS: 2681-1993	Non-ferrous metal sliding door bolts (aldrops) for with padlocks - Specification
		IS: 3400-2004 (Part 2)	Methods of Test for Vulcanized Rubber - Part 2 : Rubber, Vulcanized or Thermoplastic - Determination of Hardness (Hardness Between 10 IRHD and 100 IRHD)

S. N.	Material/Work Type	IS Code	IS Code Name
		IS: 3400-2004 (Part 9)	Methods of Test for Vulcanized Rubber - Part 9 : Rubber, Vulcanized - Determination of Density
		IS: 4905-1968	Methods for random sampling
		IS: 12823-1990	Wood Products – Pre-laminated Particle Boards – Specification
17	Aluminium Fittings	IS: 733-1983	Specification for Wrought Aluminium and Aluminium Alloy Bars, Rods and Sections (for General Engineering Purposes)
		IS: 1285-2002	Wrought Aluminium and Aluminium Alloys - Extruded Round Tube and Hollow Sections for General Engineering Purposes – Specification
		IS: 1868-1996	Anodic Coatings on Aluminium and its Alloys – Specification
		IS: 2209-1976	Specification for mortise locks (vertical type)
18	Glazing work	IS: 1761-1960	Transparent sheet glass for glazing and framing purposes
		IS: 2835-1987	Flat transparent sheet glass
		IS: 3548-1988	Code of Practice for Glazing in Buildings
19	PVC Pipes	IS: 5382-1986	Specification for Rubber Sealing Rings for Gas Mains, Water Mains and Sewers
		IS: 13592-1992	Specification for UPVC pipes for soil and waste discharge systems inside buildings including ventilation and rainwater system
20	Painting Work	IS: 16-2008 (relevant parts)	Shellac – Specification
		IS: 57-1989	Red Lead for Paints and Other Purposes – Specification
		IS: 75-1973	Specification for Linseed Oil, Raw and Refined
		IS: 77-1976	Specification for Linseed Oil, Boiled, for Paints
		IS: 110-1983	Ready mixed paint, brushing, grey filler, for enamels for use over primers
		IS: 218-1983	Specification for Creosote Oil for Use as Wood Preservatives
		IS: 290-1961	Coal tar black paint
		IS: 324-1959	Specification for Ordinary Denatured Spirit
		IS: 384-2002	Brushes, Paints and Varnishes, Flat – Specification
		IS: 426-1961	Paste filler for colour coats
		IS: 486-1983	Specification for Brushes, Sash Tool, for Paints and Varnishes
		IS: 487-1997	Brushes, Paint and Varnish - (i) Oval, Ferrule Bound; and (ii) Round, Ferrule Bound
		IS: 533-2007	Gum spirit of turpentine (oil of turpentine) – Specification
		IS: 702-1988	Specification for industrial bitumen
		IS: 1459-1974	Specification for kerosene
		IS: 1477-1971 (Part 1)	Code of Practice for Painting of Ferrous Metals in Buildings: Part 1 - Pretreatment
		IS: 1477-1971(Part 2)	Code of practice for Painting of Ferrous Metals in Buildings: Part 2 - Painting
		IS: 2333-1992	Plaster of Paris for ceramic industry
		IS: 2338-1967(Part 1)	Code of practice for finishing of wood and wood based materials: Part 1 - Operations and workmanship

S. N.	Material/Work Type	IS Code	IS Code Name
		IS: 2338-1967 (Part 2)	Code of practice for finishing of wood and wood based materials: Part 2 - Schedules
		IS: 2395-1994 (Part 1)	Painting of Concrete, Masonry and Plaster Surfaces - Code of Practice: Part 1 - Operations and Workmanship
		IS: 2395-1994 (Part 2)	Painting of Concrete, Masonry and Plaster Surfaces - Code of Practice: Part 2 – Schedules
		IS: 2524-1968 (Part 1)	Code of practice for painting of nonferrous metals in buildings: Part 1 - Pretreatment
		IS: 2524-1968 (Part 2)	Code of practice for painting of nonferrous metals in buildings: Part 2 - Painting
		IS: 2932-2003	Enamel, Synthetic, Exterior : (a) Undercoating (b) Finishing - Specification
		IS: 2933-1975	Enamel exterior (a) undercoating, (b) finishing
		IS: 5410-1992	Cement paint
21	Plumbing / Sanitary Works	IS: 554-1999	Pipe Threads Where Pressure-Tight Joints are Made on the Threads - Dimensions, Tolerances and Designation
		IS: 651-2007	Glazed stoneware pipe and fittings – Specification
		IS: 774-2004	Flushing cistern for water closets and urinals (other than plastic cisterns) – Specification
		IS: 778-1984	Specification for Copper Alloy Gate, Globe and Check Valves for Waterworks Purposes
		IS: 780-1984	Specification for sluice valves for water works purposes (50 to 300 mm size)
		IS: 781-1984	Specification for cast copper alloy screw down bib taps and stop valves for water services
		IS: 782-1978	Specification for caulking lead
		IS: 1239-2004 (Part-1)	Steel Tubes, Tubular and Other Wrought Steel Fittings - Specification - Part 1 : Steel Tubes
		IS: 1300-1994	Phenolic molding materials - Specification
		IS: 1536-2001	Centrifugally cast (spun) iron pressure pipes for water, gas and sewage
		IS: 1537-1976	Vertically cast iron pressure pipes for water, gas and sewage
		IS: 1538-1993	Cast iron fittings for pressure pipes for water, gas and sewage
		IS: 1570 (relevant parts)	Schedules for wrought steels
		IS: 1703-2000	Water Fittings - Copper Alloy Float Valves (Horizontal Plunger Type) - Specification
		IS: 1726-1991	Specification for cast iron manhole covers and frames
		IS: 1729-2002	Cast Iron/Ductile Iron Drainage Pipes and Pipe Fittings for Over Ground Non-Pressure Pipeline Socket and Spigot Series
		IS: 1795-1982	Specification for Pillar Taps for Water Supply Purposes
		IS: 2267-1995	Polystyrene Moulding and Extrusion Materials – Specification
		IS: 2326-1987	Specification for Automatic Flushing Cisterns for Urinals (Other than Plastic Cisterns)
		IS: 2548-1996	Specification for plastic seats & covers for water-closets
		IS: 2556-1994 (Part-1)	Specification for vitreous sanitary appliances (vitreous china): Part 1 General requirements
		IS: 2556-2004	Vitreous Sanitary Appliances (Vitreous China) -

S. N.	Material/Work Type	IS Code	IS Code Name
		(Part-4)	Specification - Part 4: Specific Requirements of Wash Basins
		IS: 2556-1995 (Part-6)	Vitreous Sanitary Appliances (Vitreous China) - Part 6 : Specific Requirements of Urinals and Partition Plates
		IS: 2963-1979	Specification for copper alloy waste-fittings for wash basins and sinks
		IS: 3389-1994	Urea-formaldehyde Molding Materials – Specification
		IS: 3589-2001	Steel Pipes for Water and Sewage (168.3 to 2 540 mm Outside Diameter) – Specification
		IS: 3989-1984	Centrifugally cast (spun) iron spigot and socket soil, waste, ventilation and rainwater pipes, fittings, and accessories – Specification
		IS: 4736-1986	Specification for Hot-dip Zinc Coatings on Mild Steel Tubes
		IS: 4984-1995	Specification for high density polyethylene pipes for potable water supplies
		IS: 4985-2000	Un-plasticized PVC Pipes for Potable Water Supplies – Specification
		IS: 5312 (relevant parts)	Swing Check Type Reflux (Non-Return] Valves for Water Works Purposes
		IS: 5519-1979	Deviations for un-tolerance dimensions and mass of grey iron castings
		IS: 9762-1994	Specification for polyethylene floats (spherical) for float valves
		IS:12592-2002	Precast Concrete Manhole Cover and Frame – Specification
22	Road markings	IRC: 35-1997	Code of Practice for Road Markings
23	Road marking paint	IS: 164-1981	Specification for Ready Mixed Paint for Road Marking
24	Road Signage & Reflectorised Paint	IRC: 67-2010	Code of Practice for Road Signs (Second Revision)
		IS: 5-2007	Colours for Ready Mixed Paints and Enamels
25	Pedestrian Facilities	IRC: 103-1988	Guidelines for Pedestrian Facilities
26	Interlocking concrete pavers	IRC:SP:63	Guidelines for the Use of Interlocking Concrete Block Pavement
27	Electrical Works	IS: 732-1989	Code of Practice for Electrical Wiring Installations
		IS: 694-1990	PVC Insulated cables for working voltages up to and including 1100 V
		IS: 2036-1995	Phenolic Laminated Sheets - Specification
		IS: 2667-1988	Fittings for rigid steel conduits for electrical wiring
		IS: 3043-1987	Code of practice for earthing
		IS: 7689-1989	Guide for the control of undesirable static electricity
		IS: 8623 - 1993	Specification for Low-Voltage Switchgear and Control gear Assemblies
		IS: 10422-1982	Requirement and test methods for safety of data processing equipment
		IS: 12640-2008 (Part 1)	Residual Current Operated Circuit - Breakers for Household and Similar Uses: Part 1 Circuit-Breakers Without Integral Overcurrent Protection (RCCBs)
		SP: 30-1984	Special Publication - National Electrical Code
		IS: 5216-1982 (relevant	Recommendations on Safety Procedures and Practices

S. N.	Material/Work Type	IS Code	IS Code Name
		parts)	in Electrical Work
28	Building measurement methods	IS: 2-1960	Rules for Rounding off Numerical Values
		IS: 1200 (relevant parts)	Measure of method of building and civil engineering works
		SP: 27-1987	Handbook on method of measurement of building works

B. Technical Specifications

Note: Whenever required during the execution, the amendments issued for respective specifications of HPPWD and CPWD as applicable shall supersede the current specifications given in the bid document.

a) Civil Works

For Civil Works, HPPWD Specifications for Civil Works (Vol. I), 1990 is being adopted. Where specifications are not available in the said HPPWD Specifications, specifications are adopted from CPWD Specifications, 2009 (Vol. 1 or 2 as applicable) or specifications from market for the non-schedule items in the said sequence of preference for specifications shall be followed.

1. EXCAVATION

1.1 General

All excavations shall be carried out in conformity with directions laid herein under and in a manner approved by the Engineer. The work shall be done that the suitable materials available from excavation are satisfactorily utilized as decided upon beforehand.

While planning or executing excavations, the Contractor shall take all adequate precautions against soil erosion, water pollution etc.

The excavations shall conform to the lines, grades, side slopes and levels shown on the drawings or as directed by the Engineer. The Contractor shall not excavate outside the slopes or below the established grades or loosen any material outside the limits of excavation. Subject to the permitted tolerances, any excess depth excavated below the specified levels on the roadway shall be made good at the cost of the Contractor with suitable material of similar characteristics to that removed and compacted to the requirements of ISI Specifications.

All debris and loose material on the slopes of cuttings shall be removed. No backfilling shall be allowed to obtain required slopes excepting that when boulders or soft materials are encountered in cut slopes these shall be excavated to approved depth on instructions of the Engineer and the resulting cavities filled with suitable material and thoroughly compacted in an approved manner.

Roadway and drain excavation shall consist of excavation, removal and satisfactory disposal of all materials necessary for the construction of road-way, side ditches and waterways, in accordance with the requirements of these specification and the lines, grades and cross-sections shown in the drawings or indicated by the Engineer. This work shall include the hauling and stacking of or hauling to sites of embankment construction, of suitable cut materials as required, as also the disposal of unsuitable cut materials in specified manner and the trimming and finishing of the roadway.

The classification of earth work shall be done by the Engineer and the intermediate classification like P.J./J.B./P.J.B. etc. shall be paid proportionately.

All excavation shall be done as per the profile indicated by the Engineer.

Excavation shall be carried out to the required lines and levels, widths and depths, so that dimensions of the permanent work shall not be less than what is indicated.

The whole of the excavated material shall be brought to the surface and disposed off as directed.

Selected and approved excavated stuff required for filling etc. shall be kept separated for reuse as directed.

The phasing and method of excavations for all foundation and earthwork shall be to the approval of the Engineer.

No permanent construction shall be started over the excavated surface until and unless approved by the Engineer.

Excavations taken wider or deeper than required to contain the permanent work shall be filled in at the Contractor's expense. (However, exceptions may be specially permitted in certain situations as indicated here-in-after).

Excavations taken wider than required shall be filled back with selected material thoroughly compacted in layers of 150 mm thickness.

Back filling of wrongly excavated trenches shall be done with lean cement concrete or other material if so indicated under the respective situations, described in subsequent paragraphs of this specification, so as to bring it back to the appropriate section.

1.2 Classification of Excavated Material

All materials used in excavation shall be classified by the Engineer in the following groups.

1.2.1 Ordinary Soil

Shall comprise vegetable or organic soil, turf, sand, silt, loam, clay, mud, peat, black cotton soil, soft shale or loose moorum, a mixture of these and similar materials which yields to the ordinary application of pick and shovel, rake phawrahs or other ordinary digging implement. Removal of gravel or any other nodular material having diameter in anyone direction not exceeding 75 mm occurring in such strata shall be deemed to be covered under this category. Generally this type of soil has dry bulk density less than 1.6 gm/cc.

1.2.2 Hard Soil

Any soil which generally requires the close application of picks or jumpers or scarifiers to loosen it. Stiff Clay, Gravel and Cobble Stone etc. fall under this category. This shall include:

i) Stiff heavy clay, hard shale, or compact moorum requiring grafting tool or pick or both and shovel, closely applied;

ii) gravel and cobble stone having 'maximum diameter in any one direction between 75 and 300 mm;

iii) soling of roads, paths etc., and hard core;

iv) macadam surfaces such as water bound, and bitumen/tar bound;

v) lime concrete, stone masonry in lime mortar and brick work in lime/cement mortar, below ground level;

vi) soft conglomerate, where the stones may be detached from the matrix with picks; and

vii) generally any material which requires the close application of picks, or scarifiers to loosen and not affording resistance to digging greater than the hardest of any soil mentioned in (i) to (vi) above.

Generally such type of soil has bulk density 1.6 gm/cc and above except Sandy soils.

1.2.3 Ordinary Rock (not requiring blasting)

This shall include:

i) Limestone, sandstone, laterite, hard conglomerate or other soft or disintegrated rock which may be quarried or split with crowbars;

ii) Unreinforced cement concrete which may be broken up with crowbars or picks and stone masonry in cement mortar below ground level;

iii) Boulders which do not require blasting. having maximum diameter in any direction of more than 300 mm, found lying loose on the surface or embedded in river bed soil, talus, slope wash and terrace material of dissimilar origin; and

iv) Any rock which in dry state may be hard requiring blasting, but which when wet becomes soft and manageable by means other than blasting.

1.2.4 Hard Rock (requiring blasting)

This shall comprise:

i) any rock or cement concrete for the excavation of ,which the use of mechanical plant or blasting is required;

ii) reinforced cement concrete (reinforcement cut through but not separated from the concrete) below ground level; and

iii) boulders requiring blasting.

1.2.5 Hard Rock (blasting prohibited)

Hard Rock requiring blasting as described under Clause 2.2.1 (d) below but where blasting is prohibited for any reason and excavation has to be carried out by chiselling, wedging or any other agreed method.

1.2.6 Marshy Soil

This shall include soils excavated below the original ground level of marshes and swamps and soils excavated from other areas requiring continuous pumping or bailing out of water.

1.3 Authority for Classification

The classification of excavation shall be decided by the Engineer and his decision shall be final and binding on the Contractor. Merely the use of explosives in excavation will not be considered as a reason for higher classification unless blasting is clearly necessary in the opinion of the Engineer.

1.3.1 Spade Work

In case of Spade Work the application of spade/phawrah, rake etc., is required. Blasting is not required under this work.

1.3.2 Pick Work

In case of Pick Work the application of pick axes, shovels, etc. is required. Blasting is not required for this work.

1.3.3 Jumper Work

In case of Jumper Work application of crowbars, pick axes etc. is required. The Jumper Work also requires mild blasting work. The rates for the explosives such as Special Gelatine 80%, Detonators, Safety fuse coil and labour such as Driller, Blaster and Beldars have been included in the rate of Jumper Work. The rates for the drilling equipment have also been included.

1.3.4 Chiselling/Wedging out of Rock

Where the blasting is prohibited and soft or hard rock is to be removed the chiselling has to be resorted to. Chiselling may be done in soft rock or hard for which different rates are applicable. The excavation has to be done by Chiselling/Wedging or by any other suitable method. The rates for Chiseller/Breaker, Black Smith and Beldars have been included in the case of the Chiselling of Soft Rock as well as that of Hard Rock.

1.4 Construction Operations

1.4.1 Setting out

After the site has been cleared, the limits of excavation shall be set out true to lines, curves, slopes, grades and sections as shown on the drawings or as directed by the Engineer. The Contractor shall provide all labour, survey instruments and materials such as strings, pegs, nails bamboos, stones, lime, mortar, concrete, etc., required in connection with the setting out of works and the establishment of bench marks. The Contractor shall be responsible for the maintenance of bench marks and other marks and stakes as long as in the opinion of the Engineer they are required for the work.

1.4.2 Stripping and Storing top Soil

When so directed by the Engineer, the top soil existing over the sites of excavation shall be stripped to specified depths and stored at designated locations for reuse in covering embankment slopes, cut slopes, berms and other disturbed areas where re-vegetation is desired.

1.4.3 Rock Excavation

Rock, when encountered in roadway excavation, shall be removed upto the sub grade level or as otherwise indicated on the drawings. Where, however, unstable shales or other similar materials are intersected at the subgrade level, these shall be excavated to the extent of 500 mm below the subgrade level or as otherwise specified. In all cases, the excavation operations shall be carried out that at no point on cut formation the rock protrudes above the specified levels, provided, however, that a negative tolerance of 150 mm shall be permissible.

Where excavation is done to levels lower than those specified, the excess excavation shall be made good by hand packing with rubble and chips to the designated level and compacting to the satisfaction of the Engineer.

Slopes in the rock cutting shall be finished to uniform lines corresponding to slope lines shown on the drawing or as directed by the Engineer. Notwithstanding the foregoing all loose pieces of rock on excavated slope surface which move when prised by a crowbar shall be removed.

1.4.4 Marsh Excavation

The excavation of marches/swamps shall be carried out as per programme laid down by the Engineer.

Excavation of marshes shall begin at one end and proceed in one direction across the entire marsh immediately ahead of back-filling. The method and sequence of excavating and back filling shall be such as to assure, to the extent practicable, the complete removal

or displacement of all muck from within the lateral limits called for on the drawings or as stated by the Engineer, and to the bottom of the marsh, firm support or levels indicated.

1.4.5 Excavation of road shoulders for widening of pavement

In works involving of existing pavements unless otherwise specified, the shoulders shall be removed to their full width and to levels shown on the drawings or as indicated by the Engineer. While doing so, care shall be taken to see that no portion of the existing pavement designated to be retained is loosened or disturbed.

1.4.6 Dewatering

If water is met within the excavations due to springs, seepage, rain or other causes, it shall be removed by suitable diversions, pumping or bailing out and the excavation kept dry whenever so required or directed by the Engineer. Care shall be taken to so discharge the drained water as not to cause damage to the works, crops or any other property.

1.4.7 Disposal of excavated materials

All the excavated materials shall be the property of the Government. The operations shall be so arranged that the capacity of cutting, haulage and compaction is nearly the same.

All hard materials, such as hard moorum, rubble etc. not intended for use in the bank, shall be stacked neatly on Government land as directed by the Engineer, within the lead specified for the item, for future use such as pitching. Unsuitable and surplus materials not intended for use in any part of the road shall be disposed off as directed by the Engineer.

1.5 Useful Materials and Finds

Any useful material obtained from the excavation shall be stacked separately in regular stacks as directed by the Engineer and shall remain the property of the Government. Any finds such as relics of antiquity, coins, fossils or other articles of value shall delivered to the Engineer and shall also remain the property of the Government.

1.6 Earthwork for Levelling the Area

1.6.1 Setting out and making profiles

1.6.1.1 Masonry pillars will erected at suitable points in the area to serve as bench marks for the execution of the work. These bench marks shall be connected with G.T.S or any other bench mark approved by the Engineer. Necessary profile with pegs, bamboos and strings of "Burjis" shall be made to show the correct formation levels before the work is started. The Contractor shall supply labour and materials for setting out and making profiles and "Burjis" for the work at his own cost. The profiles and "Burjis" shall also be maintained by him during the execution of work.

1.6.1.2 The ground levels shall be taken at 5 to 15 metres intervals in level on uniformly sloping ground and, at closer intervals where local, mounds pits or undulations are met with, as directed by the Engineer. The ground levels shall be recorded in field books and plotted on a plan, which shall be signed by the Contractor and the Engineer before earth work is started and labour required for taking levels shall be supplied by the Contractor at his own cost.

1.6.2 Rough Excavation

1.6.2.1 Excavation not requiring dressing of sides and bottom and reduction to exact levels, such as winning earth from borrow pits, hill side cutting etc. shall be described as "Rough Excavation" and given in cubic metres.

1.6.3 Cutting and Filling

1.6.3.1 Cutting shall be done from top to bottom. Under-mining or under-cutting shall not be allowed. The earth from cutting shall be directly used for filling and no claim of double handling of earth shall be entertained. Filling shall be done in regular layers, each layer not exceeding 20 cms in depth. The earth used for filling shall be free from all roots, grass and rubbish and all lumps and clods exceeding 8 cms in any direction shall be broken down. Each layer shall be consolidated by breaking clods and ramming. Watering shall be done, if so stipulated and as required. The top surface of the finally finished area shall be neatly dressed.

1.6.3.2 Where consolidation of filling or banking is specified each layer of earth shall be adequately watered to aid compaction. It shall then be rolled with roller of minimum half tonne weight not less than five times till it gets evenly and densely consolidated. Where roller cannot work, the earth shall be consolidated with wooden or steel rammers of seven to ten kilograms weight having a base of 20 cms square of 20 cms diameter. The labour for ramming shall be at least one rammer to six diggers. Every third layer of earth and the

topmost layer shall be well consolidated with power roller of minimum eight tonne weight, not less than five times till the soil behaves as an elastic material and gets compressed under the load of roller. Before placing the next layer, the surface of the under layer shall be moistened and scarified with pick axes or spades, so as to provide a satisfactory bond with the next layer. The top surface of the finally finished area shall be neatly dressed.

1.6.3.3 All cutting shall be done to the required levels. Should cutting be taken deeper, such extra excavation shall not be measured for payment. Further the bottom of excavation shall be brought to required levels by filling in with suitable earth duly consolidated at the Contractor's cost. However in case of hard rock. Where blasting operations have been resorted to, cutting shall be measured to the actual levels, provided the Engineer is satisfied that the Contractor has not gone deeper than what was unavoidable.

1.6.3.4 The finished formation levels, in case of filing shall be kept higher than the required levels by making and allowance of 10% of depth of filing for future settlement in case of ordinary consolidated fills; 5% in case where the consolidation is done by heavy mechanical means.

1.6.3.5 During the execution of work, the natural drainage of the area shall be maintained by the Contractor.

1.7 Plying of Construction Traffic

Construction traffic shall not use the cut formation without the prior permission of the Engineer. Any damage arising out of such use shall be made good by the Contractor at his own expense.

1.8 Preservation of Property

The Contractor shall undertake all reasonable precautions for the protection and preservation of any or all existing roadside trees, drains, sewers to other sub-surface drains, pipes, conduits and any of the structure under or above ground, which may be affected by construction operations and which in the opinion of the Engineer shall be continued in use without any change. Safeguards taken by the Contractor in this respect, shall be got approved by him from the Engineer. However, if any of these objects is damaged by reason of the Contractor's negligence, it shall be replaced or restored to the· original condition at his expense.

1.9 Measurements for Payments

Roadway and drain excavation shall be measured by taking cross-sections at suitable intervals in the original position before the work starts and after its completion and computing the volumes in cubic metres by the method of average end area. Where it is not feasible to compute volumes by this method because of erratic location of isolated deposits) the volumes shall be computed by other accepted methods.

At the option of the Engineer, the Contractor shall leave depth indicators during excavations of such shape and size and in accurately as directed so as to indicate the original ground level as accurately as possible. The Contractor shall see that these remain intact till the final measurements are taken.

For rock excavation the overburden shall be removed first so that necessary cross section could be taken for measurement. Where cross sectional measurements could not be taken due to irregular configuration or where the rock is admixed with other classes of materials, the volumes shall be computed as per the direction of Engineer.

The Lead and lift shall be measured from the centre of gravity of the excavated earth to that of the placed earth, for such measurements the earth work proposed to be worked upon shall be demarcated in sections economically for placement of Excavated Earth. The mean lead and lift shall be Calculated Separately for such sections.

When earth has to be carried over a spoil bank and dumped beyond it, the mean lift would be the difference in level between centre of gravity of the excavated earth and top of the spoil bank omitting the dowel.

The rates provided for additional leads are valid for distances upto 300 metres for disposals done manually. However, the most economical mode i.e. manual (including the use of wheel barrows), animal transport or mechanical transport shall be decided by the• Engineer and paid as such according to the relevant schedule of rates for manual, animal or mechanical transport.

1.10 Rate

The rates for the items of excavation shall be paid for carrying out the required operations as described for the individual items. These rates do not include the cost of pumping out of water which shall normally be done departmentally. Whenever work is to be get done by

contract, the rate shall be settled before execution on the merits of the individual case. The labour rates do not include the expenses on account of Compressor. The rates include all labour, materials, tools, safe guards and incidentals necessary to complete the work to the specifications within specified leads and lifts. Contractor's profit @ 10% and overhead changes @ 5% have been included in the rate.

2. EXCAVATION FOR FOUNDATION, DRAINS, CHANNELS, PIPES AND CABLES

2.1 Description

Excavation for structures shall consist of the removal of material for the construction of foundations for bridges, culverts, retaining ,walls, headwalls, cut of walls, pipe culverts and other similar structures in accordance with the requirements of these specifications and the lines and dimensions shown on the drawings or as indicated by the Engineer. The work shall include construction of the necessary cofferdams and cribs and their subsequent removal; all necessary sheeting, shoring, bracing, draining, and pumping; the removal of all logs, stumps, grubs and other deleterious matter and obstructions necessary for placing the foundations; trimming bottoms of excavations; backfilling and clearing up the site, and the disposal of all surplus material.

2.2 Classification of Excavated Material

2.2.1 All materials involved in excavation shall be classified by the Engineer in the following groups:

(a) Ordinary Soil

This shall comprise vegetable or organic soil, turf, sand, silt, loam, clay, mud, peat, black cotton soil, soft shale or loose moorum a mixture of these and similar material which yields to the ordinary application of pick and shovel, rake or other ordinary digging implement. Removal of gravel or any other nodular material having diameter in any one direction not exceeding 75 mm occurring in such strata shall be deemed to be covered under this category.

(b) Hard Soil

This shall include:

i) stiff heavy clay, hard shale or compact moorum requiring grafting tool or pick or both and shovel, closely applied;

ii) gravel and cobble stone having maximum diameter in any one direction between 75 and 300 mm;

iii) soling of road, paths, .etc., and hard core;

iv) macadam surface such as water bound, and bitumen/tar bound;

v) lime concrete, stone masonry in lime mortar and brick work in lime/cement mortar, below ground level;

vi) soft conglomerate, where the stones may be detached from the matrix with picks; and

vii) generally any material which requires the close application of picks, or scarifiers to loosen and not affording resistance to digging greater than the hardest of any soil mentioned in (i) to (vi) above.

(c) Ordinary Rock (not requiring blasting)

This shall include:

i) limestone, sandstone, laterite, hard conglomerate or other soft or disintegrated rock which may be quarried or split with crowbars;

ii) unreinforced cement concrete which may be broken up with crowbars or picks and stone masonry in cement mortar below ground level;

iii) boulders which do not require blasting having maximum diameter in any direction of more than 300 mm, found lying loose on the surface or embedded in river bed, soil, talus, slope wash and terrace material of dissimilar origin; and

iv) any rock which in dry state may be hard, requiring blasting,· but which when wet becomes soft and manageable by means other than blasting.

(d) Hard Rock (requiring blasting)

This shall comprise:

i) any rock or cement concrete for the excavation of which the use of mechanical plant or blasting is required;

ii) reinforced cement concrete (reinforcement cut through but not, separated from the concrete) below ground level; and

iii) boulders requiring blasting.

(e) Hard Rock (blasting prohibited)

Hard rock requiring blasting as described under Clause 2.2.1 (d) above but where blasting is prohibited for any reason and excavation has to be carried out by chiselling wedging or any other agreed method.

(f) Marshy Soil

This shall include soils excavated below the original ground level of marshes and swamps and soils excavated from other areas requiring continuous pumping or bailing out of water.

2.2.2 Authority for Classification

The classification of excavation shall be decided by the Engineer and his decision shall be final and binding on the Contractor. Merely the use of explosives in excavation will not be considered as a reason for higher classification unless blasting is clearly necessary in the opinion of the Engineer.

2.3 Construction Operations

2.3.1 Setting Out

After the site has been cleared, the limits of excavation shall be set out true to lines, curves and slopes.

2.3.2 Excavation

Excavation shall be taken to the width of the lowest step of the footing and the sides shall be left plumb where the nature of soil allows it. Where the nature of soil or the depth of the trench does not permit vertical sides, the Contractor at his own expense shall put necessary shoring, strutting and planking or cut slopes to after angles/or both with due regard to the safety of personnel and works and to the satisfaction of the Engineer.

The depth to which the excavation is to be carried out shall be as shown on the drawings, unless the type of material encountered is such as to require changes, in which case the depth shall be as ordered by the Engineer.

2.3.3 Dewatering and protection

Where water is met within excavation due to stream flow, seepage, springs, rain or other reasons, the Contractor shall take adequate measures such as bailing, pumping, constructing diversion channels, drainage channels, bunds, cofferdams and other necessary works to keep the foundation trenches dry when so required and to protect the green concrete/masonry against damage by erosion or sudden rising of water level. The methods to be adopted in this regard and other details thereof shall be left to the choice of the Contractor but subject to approval of the Engineer. Approval of the Engineer shall, however, not relieve the Contractor of the responsibility for the adequacy of dewatering and protection arrangements and for the quality and safety of the works.

Where cofferdams are required, these shall be carried out to adequate depths and heights, be safely designed and constructed and be made as watertight as is necessary for facilitating construction to be carried out inside them. The interior dimensions of the cofferdams shall be such as to give sufficient clearance for the construction and inspection and to permit installation of pumping machinery, etc. inside the enclosed area.

Pumping from the interior of any foundation enclosure shall be done in such a manner as to preclude the possibility of the movement of water through any fresh concrete. No pumping shall be permitted during the placing of concrete or for any period of at least 24 hours thereafter, unless it is done from a suitable sump separated from the concrete work by a watertight wall or other similar means.

At the discretion of the Contractor, cement grouting or other approved methods may be used to prevent or reduce seepage and to protect the excavation area.

The Contractor shall take all precautions in diverting channels and in discharging the drained water as not to cause damage to the works, crops or any other property.

2.3.4 Preparation of foundation

The bottom of the foundation shall be levelled both longitudinally and transversely or stepped as directed by the Engineer. Before footing is laid, the surface shall be slightly watered and rammed. In the event of excavation having been made deeper than that shown on the drawings or as otherwise ordered by the Engineer, the extra depth shall be made up with concrete or masonry of the foundation grade at the cost of the Contractor. Ordinary filling shall not be used for the purpose to bring the foundation to level.

When rock or other hard strata is encountered, it shall be freed of all soft and loose material, cleaned and cut to a firm surface either level, stepped or serrated as directed by the Engineer. All seams shall be cleaned out and filled with cement mortar or grout to the satisfaction of the Engineer.

When foundation piles are used, the excavation of each pit shall be substantially completed before beginning pile-driving operations therein. After pile driving operations in a given pit are completed; all loose and displaced materials therein shall be removed to the elevation of the bottom of the footings.

2.3.5 Slips and blows

If there are any slips or blows in the excavation, these shall be removed by the Contractor at his own cost.

2.3.6 Public safety

Near towns, villages and all frequented places, trenches and foundation pits shall be securely fenced, provided-with proper caution signs and marked with red lights at night to avoid accidents. The Contractor shall take adequate protective measures to see that the excavation operations do not affect or damage adjoining structures.

2.3.7 Backfilling

Backfilling shall be done with approved material after concrete or masonry is fully set and carried out in such a way as not to cause undue thrust on any of the structure. All space between foundation masonry or concrete and the sides of excavation shall be refilled to the original surface, making due allowance for settlement, in 200 mm loose layers, which shall be watered and compacted.

2.3.8 Disposal of surplus excavated materials

Clause 1.4.7 above shall, apply.

2.4 Precautions

All materials and labour required for fencing in and protecting against risk or accidents due to open excavation shall be provided by the Contractor.

2.5 Pumping

The Contractor shall arrange bailing out water in the foundations or trenches accumulated due to rains. The pumping out of water caused by springs, sub-soil water, canal or river seepage, and broken water mains or drains for which the Contractor is not responsible shall be arranged by the Department and the cost for the same is not included in the rate.

2.6 Rock Foundation

If rock foundation is secured, the excavation shall be done in such a manner as to allow the rock to be exposed; prepared for receiving the concrete or masonry. All loose and disintegrated rock or thin strata shall be stripped to a clean bed acceptable to the Engineer.

All seams or crevices shall be cleaned out and filled with concrete or mortar which shall be paid for separately.

2.7 Completion

The Contractor shall report in writing the completion of the foundation trenches to the Engineer, and no concrete or masonry may be commenced without that Officer's sanction in writing.

2.8 Measurements

Excavation for structures shall be measured in cubic metres for each class of material encountered, limited to the dimensions shown on the drawings or as directed by the Engineer. Excavation over increased width, cutting of slopes, shoring shuttering and planking shall be deemed as convenience for the Contractor in executing the work and shall not be measured and paid.

2.9 Rate

The rate includes all the operation as described in the items of work.

3. FILLING EXCAVATED EARTH IN FOUNDATION TRENCHES AND PLINTH OR UNDER FLOORS AND SAND FILLING IN PLINTH

3.1 Excavation in Earth Work and Filling

3.1.1 General

For excavation, reference may be made to specifications in section 1 and 2 above. The earth from cutting shall be directly used for filling and no claim for double handling of earth shall be entertained. Filling shall be done in regular horizontal layers each not exceeding 15 cm. in depth. Normally, excavated earth from same area shall be used for filling.

3.1.2 Earth

The earth used for filling shall be free from salts, roots, grass, rubbish or other foreign & organic matter. Lumps & clods exceeding 8 cms in any direction shall be broken or removed.

3.1.3 Filling Sides of Trenches

As soon as the work in foundation has been completed and measured, the sides of foundations shall be cleared of all debris, brick-bats, mortar droppings etc., and filled with earth in layers not exceeding 15 cms, each layer shall be adequately watered, rammed and consolidated before the succeeding one is laid. Earth shall be rammed with iron rammers where feasible, and with the butt ends crowbars where rammer cannot be used, No filling shall be commenced without the permission of the Engineer which must be obtained in writing.

3.1.4 Plinth Filling i.e. Filling under Floors

The plinth shall be similarly filled with earth in layers not exceeding 15 cms adequately watered and consolidated by ramming with iron or wooden rammer. When filling reaches the finished level, the surface shall be flooded with water for at least 24 hours, allowed to dry and then rammed and consolidated in order to avoid any settlement at a later stage. The finished level of filling shall be kept to slope intended to be given to the floor.

Where there is black cotton soil, this shall be removed to a depth of 60 cms as it is liable to absorb moisture and thus ruin a floor.

3.1.5 Measurements

Depth of consolidated earth fillings shall be measured for the purpose of payment. The dimensions of the filling shall be measured correct to the nearest cm and cubical contents worked out in cubic metres correct to two places of decimal.

3.1.6 Rate

The rate includes cost of all operations described above. This includes the excavation in earth work and filling in 15 cm layer, ramming, watering and consolidating upto a lead of 20m and lift up to 1.5m have been included in the rates. Water charges, contractor's profit @ 10% and over-head charges @ 5% have also been included in the rates.

3.2 Filling in Plinth with Sand under Floors including Watering, Ramming, Consolidating and Dressing Complete

Sand

Sand shall be clean and free from dust organic and foreign matter and corresponding to grading Zone V or IV.

Filling

Sand filling shall be done in a manner similar to earth filling as specified in 3.1.4 above. The surface of the consolidated sand shall be dressed to required level or slope. Concreting of floor shall not be started till the Engineer has inspected and approved the sand filling.

Measurements

Volume of consolidated filling shall be measured. The dimensions shall be measured correct to the nearest cm and cubical contents worked out in cubic metre correct to two places of decimal.

Rate

The rate includes cost of materials and labour involved in all operations described above. Carriage of material by mechanical transport upto one km and head load upto 100 m have been included in the rates. In addition to this, water charges, contractor's profit @ 10% and over-head charges @ 5% have also been included in the rates.

4. LEAD, LIFT, AND SURFACE DRESSING

4.1 Lead

4.1.1 Lead shall be measured from the centre of gravity of excavated earth. For measurements, the earth work proposed to be worked upon shall be demarcated in sections economically for placement of excavated earth. The mean lead shall be calculated separately for such sections.

4.1.2 The extra rates are applicable in different type of works for a lead of 20 metres or part thereof. The rates include contractor's profit @ 10% and overhead charge @ 5%.

4.2 Lift

4.2.1 The lift shall be measured from centre of gravity of excavated earth to that of the placed earth. For such measurements, the earth work proposed to be worked upon shall be demarcated in sections economically for placement of excavated earth. The mean lift shall be calculated separately for such sections.

For converting lift into horizontal lead, the lift up to 4 metres will be multiplied by 10 and from above 4 metres to 6 metres, it will be squared and then multiplied by 3.25 and beyond 6 metres it will be multiplied by 20.

When earth has to be carried over a spoil bank and dumped beyond it, the mean lift would be the difference in level between the centre of gravity of the excavated earth and top of the spoil bank omitting the dowel.

4.3 Dressing

4.3.1 Surface dressing shall include removing vegetation of cutting and filling up to depth of 25 cms. High portions of ground shall be cut down and, hollow and depression filled up to the required level with the excavated earth so as to give an even, neat and tidy look to the site. The cutting and filling shall be so balanced that no carriage of earth is involved either from or the site in question.

4.3.2 Measurements

The area of the ground dressed shall be measured in sqm. Length and breadth shall be measured correct to the nearest cm. Area shall be measured correct to two places of decimals.

4.3.3 Rate

The rate includes cost of labour involved in all the operations described above. This also includes 10% contractor's profit and 5% over-head charges.

5. PLANKING AND STRUTTING FOR EARTH WORK IN EXCAVATION

5.1 General

When the depth of trench in soft/loose soil exceeds 2 metres, stepping, sloping, or planking and strutting of sides shall be done. In case of loose and slushy soils, the depths at which these precautions are to be taken shall be determined by the Engineer according to the nature of soil.

Planking and strutting shall be 'close' or 'open' depending on the nature of soil and the depth of trench. The type of planking and strutting shall be determined by the Engineer. It shall be the responsibility of the Contractor to take all necessary steps to prevent the sides of trenches from collapse.

5.1.1 Close planking and strutting

Close planking and strutting shall be done by completely covering the sides of the trench, generally with short, upright & members called 'poling boards.' These shall be 250x38mm in section or as directed by the Engineer. The boards shall generally be placed in position vertically in pairs, one board on either side of cutting. These shall be kept apart by horizontal walling of strong wood at a minimum spacing of 1.2 m cross strutted with ballies or as directed by the Engineer.

The length and diameter of the ballie struts shall depend upon the width of the trench. Typical sketch of close timbering is given in Fig. 1. Where the soil is very soft and loose the boards shall be placed horizontally against the sides of the excavator and supported by vertical 'wallings' which shall be strutted to similar timber pieces on the opposite face of the trench. The lowest boards supporting the sides shall be taken in the ground for a minimum depth of 75mm. No portion of the vertical side of the trench shall remain exposed, so that the earth is not liable to ship out.

The withdrawal of the timbers shall be done very carefully to prevent collapse of the trench. It shall be started at one end and proceed systematically to the other end. Concrete or masonry shall not be damaged while removing the planks. No claim shall be entertained for any timber, which cannot be withdrawn and is lost or buried, unless required by the Engineer to be left permanently in position.

5.1.2 Open planking and strutting

In case of open planking and strutting, the entire surface of the side trench is not required to be covered. The vertical boards of 250 x 38 mm width shall be spaced sufficiently apart to leave unsupported strips of 50 cm average width. The detailed arrangement, sizes of the timber and the distances apart shall be subject to the approval of the Engineer. In all other respect, specifications for close planking and strutting shall apply to open planking and strutting. Typical sketch of open planking and strutting is given in Fig. 1.

5.1.3 Measurements

The dimensions shall be measured correct to the nearest cm and the area of the face supported shall be worked out in sqm correct to two places of decimal.

5.1.3.1 Work shall be grouped according to the following:

(a) Depth not exceeding 1.5 m.

(b) Depth exceeding 1.5 m in stages of 1.5m.

5.1.3.2 Planking and strutting to the following shall be measured separately:

(a) Trenches.

(b) Areas (the description shall include use and waste of raking shores).

(c) Shafts, walls, cesspits, manholes and the like.

(d) Where tightly driven close butt jointed sheeting is necessary as in case of running sand, the item shall be measured separately and packing of cavities behind sheeting with suitable material included with the item.

(e) Planking and strutting required to be left permanently in position shall be measured separately.

5.1.4 Rate

The rate shall include use and waste of all necessary timber work as mentioned above including fixing and subsequent removal.

5.1.5 Safety measures as detailed in Indian Standard Safety Code for excavation work (IS: 3764-1992 as amended from time to time) shall be adhered to.

5.1.6 Whenever there is disagreement between the Contractor and the Engineer regarding the necessity or otherwise of timbering or other safety measures, the Contractor shall be responsible to obtain the decision of the Engineer in writing, failing whish the contractor shall be liable for the damages caused, due to non-adoption of proper timbering methods.

5.1.7 Poling Boards

These are used to support the sides of excavation in which the ground can stand upto a vertical phase of one metre or more. (Long enough to enable poling boards to be placed). Poling boards are short upright members of 250 x 38 mm section or as otherwise directed by the Engineer. The boards shall generally be placed in position vertically, in pairs one board on each side of cutting and shall be kept apart by horizontal walling of strong wood, at a minimum spacing of 1.2 metres cross strutted with ballies. The length of the ballie strut shall depend upon the width of the trench.

5.1.8 Horizontal strutting

In cases where the soil is found to be soft & loose or where the ground is heavily surcharged, the timber boards shall be placed horizontally against the sides of the excavation and supported by vertical wallings which in turn shall be strutted by cross ballies.

5.1.9 Runners

5.1.9.1 This type of timbering is used in bad ground which requires support during the whole period of excavation. These are driven down slightly in advance of the digging and the ends are kept 'toed in' to the bottom of the excavation to prevent loss of ground.

5.1.9.2 Runners are usually square edged but V-jointed runners are used to make tight job and to prevent as far as possible, the infiltration of water, silt etc. The lower ends shall be sharpened to a chisel edge and splayed.

5.1.9.3 If hard driving is anticipated the lower ends shall be iron. Shed and the heads shall be ringed or bound heads with hoop iron. Payment for each such item shall be made extra over the ordinary runner work (without iron shed end) described above.

5.1.10 Open timbering in trenches including use of and waste of all necessary timber work including walls, struts, open poling boards/horizontal sheeting/runners etc. as may be necessary and fixing and removal complete (measurements to be taken of the face area).

5.1.10.1 Open planking and strutting

This shall be as per Clause 5.1.2 above.

5.1.10.2 Measurements

The dimension shall be measured correct to the nearest cm and the area of the faces supported shall be worked out correct to two places of decimal in sqm. The type of timbering shall be clearly described in the bill of quantities. The area shall be measured for different depths as mentioned in the schedule.

Where tightly driven close butt jointed sheeting is necessary as in the case of running sand, the item shall be measured separately and the packing of cavities behind sheeting with suitable material shall be included in the description of the item.

5.1.10.3 Rate

The rate shall include use and waste of all necessary timber work as mentioned above including fixing and subsequent removing. The rate includes the cost of materials such as poling boards, walling ballies and struts etc. The carriage of material upto one km. by mechanical transport and up to 100 mtrs by head load has been included in the rates. Contractor's profit @ 10% and over-head charges @ 5% have been included in the rates.

5.1.11 Close timbering in trenches including use and waste of all necessary timber work including walls, struts, close poling board/horizontal sheeting/runner etc. as may be necessary shoring and packing cavities (Wherever required) and fixing and removal complete (measurements to be taken of the face area timbered).

5.1.11.1 Close planking and strutting

This shall be as per Clause 5.1.1 above.

5.1.11.2 Measurements

For measurements, specification 5.1.10.2 above shall be referred to.

5.1.11.3 Rate

For rates, specification 5.1.10.3 above shall be referred to.

6. REMOVAL OF SLIPS

6.1 Removal of slips in all kinds of soil (including saturated soil (including saturated soil but excluding boulder and rocky portion requiring blasting).

6.1.1 In this case the serviceable material should be stacked at safe place so that it may not cause hindrance to traffic. The unserviceable material should be disposed of and a lead of 20 metres has been included in the rates. The rate includes removal of saturated soil also. Every effort should be made to remove as big boulders as is possible with manual labour and without resorting to blasting. For the removal of boulders and rocks, the help of crowbars must be taken. Where the crowbars are available in short supply at the site where the slips are to be removed, the uses of wooden poles have also been found out to be useful.

6.2 Removal of boulders or rocky portion of slips.

6.2.1 Wherever it is not possible to remove the boulders and rocks manually, blasting shall be resorted to. For carrying out the blasting, when permitted, reference may be made to relevant HPPWD Specifications (Vol. I), 1990, under Chapter 7 - Earth Work. The rate includes removal of boulders or rocky portion up to a distance of 20 metres. Disposal of unserviceable materials stacking serviceable materials and neatly dressing the surface have been included in the rates.

6.3 Measurements

The cross-sections at suitable intervals as per the direction of the Engineer shall be plotted on the M.B.'s before actually removing the slips. Permanent pegs or bench marks may be fixed in order to plot the cross-sections. The slips should be measured in cubic metres. Convenient method may also be used in case of calculating the volumes of boulders and or rocks.

6.4 Rate

The rates include cost of all materials and equipment. The rates also include the labour involved in various operations for the removal of this item as mentioned in the schedule of rate. This also includes contractor's profit @ 10% and over-head charges @ 5%.

7. FORM WORK WITH STEEL PLATES AND TIMBER BATTENS, BALLIES ETC.

7.1 General

Form work shall include all temporary or permanent forms required for forming the concrete, together with all temporary construction required for their support.

Forms for concrete shall be constructed of timber, plywood or metal or PGI sheets and be of substantial and rigid construction true to shape and dimensions shown on the drawings. Where metal forms are used all bolts and rivets shall be counter sunk and well ground to provide smooth plain surface. Forms shall be so constructed as to be removable in sections in the desired sequence, without damaging the surface of concrete or disturbing other sections. For easy removal, bolted and wedged connection should be preferred to nailed joints. Wherever nailed joints are provided, just sufficient number of nails should be used and indiscriminate use of nails shall be avoided.

7.2 Materials

7.2.1 Timber, planks, scantlings and battens

Timber planks, scantlings and battens shall conform to specifications as given below.

7.2.1.1 Timber shall be of good quality and well-seasoned. It shall have uniform colour, reasonably straight grains and shall be free from dead knots, cracks, shakes, sap-wood, heart-rot, sap rot boxed heart, pitch (resinous) pockets or streaks in exposed edges, worm holes, splits and wraps etc. Specified variety of timber shall be used in the work. Timber shall be sawn in direction of grains. Sawing should be truly straight and square. The timber for use in structures constantly in contact with water or damp earth shall be treated with suitable preservative laid down in IS: 401-2001 so as to resist fungi in termites and marine borers.

Timber consisting of sap-wood can also be used with the permission of the Engineer-in-Chief/Chief Engineer provided:

1) Its use is economical as compared to timber consisting of heart wood only and;
2) It is chemically impregnated with a suitable preservative as per recommended practice laid down in IS: 401-2001.

7.2.1.2 Kail Wood

7.2.1.2.1 1st Class Kail Wood

The timber shall .be of very good quality, well-seasoned and free from defects such as dead knots, cracks, sapwood etc. No individual hard and sound knot shall exceed 6 sqcm in size and the aggregate area of such knots shall not be more than 1% of the area of the piece. There shall not be less than 5 growth rings per cm width in cross-section.

7.2.1.2.2 2nd Class Kail Wood

The timber shall be of good quality, well-seasoned and generally free from defect such as dead knots, cracks, shakes, sapwood etc. However, traces of sapwood shall be allowed. No individual sound and hard knot shall exceed 15 sqcm in size and the aggregate area of such knots shall not exceed 2% of the area of the piece. There shall not be less than 2 growth rings per cm width in cross-section.

The timber used in shuttering shall not be so dry as to absorb water from concrete and swell and bulge, nor, so green or wet as to shrink or wrap after erection. Kail wood or such other soft wood, which is not affected appreciably by its contact with water, shall be used. It shall be free from shakes, loose knots, wormholes or other defects. The planks, scantlings and battens shall be accurately sawn and planned on the side and the surface coming in contact with concrete. The dimensions of scantlings and battens shall conform to the design. The strength of the wood shall not be less than that assumed in the design.

7.2.1.3 Sal Wood

Sal is about 30 percent heavier than teak, 50 percent harder, and about 20 to 30 percent stronger. In shock resistance it is about 45 percent above teak. Its heart wood is a naturally durable wood, and usually remains immune to attack by white ants and fungi for a long period, while its sapwood is very perishable and should not be used. Well dried Sal is not a really easy wood to saw and work. It is a rough constructional wood than a carpentry

timber. No individual hard and sound knot shall exceed 25 mm in diameter and the aggregate area of all the knots shall not exceed 1% of the area of the piece.

It can be used for a variety of purposes, such as for beams, rafters, flooring, piles, bridging, tool handles, picker arms and tent pegs etc.

7.2.2 Ballies

7.2.2.1 Ballies shall satisfy the requirements of IS specification No. 3337-1978. Ballies of various sizes and species of timber are extensively used for the construction of scaffolding and for the erection of temporary and semi-permanent structures. Ballies are also used in large quantities for fencing work, pile foundation, supports for shuttering and for flood protection works in the form of permeable spurs bank piling for preventing erosion. This standard has, therefore, been prepared with the object of providing guidance on the sizes and requirements of Ballies for general purposes.

7.2.2.2 Manufacture

Unless otherwise specified, the bark shall be completely removed and all branches and excrescences shall be dressed down flush with the surface. The top and bottom ends shall be cut square.

7.2.2.3 Requirements

Ballies shall be air-dried to a moisture content not exceeding 20 percent within a depth of 12 mm from the surface when measured at one-third length of the Ballies from its butt end.

Ballies shall be reasonably straight, and shall be free from cut across the grain, live insect attack, any kind of decay (rot), pronounced spiral or twisted grain, hollow heart and dead knots exceeding 5 cm in diameter.

7.2.2.4 The ballies shall be of Sal and of the variety popularly known as 'gollas'. The diameter specified shall be the mean diameter. This mean diameter shall be the average of three diameters measured at the centre and the two ends. The following tolerances shall be permitted:

S.	Length	Mean diameter or diameter at the centre	Tolerances in diameter at the thinner end
1.	Ballies not exceeding 3 m length.	Not less than the specified diameter.	The diameter at the thinner end shall not be less than specified diameter by more than 10 mm.
2.	Ballies exceeding 3 m length.	Not less than the specified diameter.	The diameter at the thinner end shall not be less than specified diameter by more than 20 mm.

Ballies to be used as props shall have 100 mm minimum diameter, measured at mid length and 80 mm at thin end. Ballies shall be reasonably straight (the centre line joining any two points on the actual axis 3 meter apart shall not deviate from any point on the actual line of axis of the ballies by more than 50 mm in a length of 3m); and shall be free from cuts across the grain, large cracks, live insect attack, any kind of decay (rot) pronounced spiral or twisted grain, hollow heart and dead knots exceeding 50 mm in diameter. The top and bottom ends shall be cut square and shall be free from cracks.

For any further details on timber and ballie specifications, provisions of Chapter 2 of HPPWD Specifications (Vol. I), 1990 shall be followed.

7.2.3 P.G.I. Sheets

When the formwork with sheathing of steel sheets is to be done, it must be ensured that the minimum thickness of plain galvanized iron sheet is 1 mm. The steel sheets shall be placed on planks. In addition to planks, the battens etc. should also be provided to the satisfaction of Engineer. The battens should be horizontal well as vertical. The battens should be provided as per the design equipment. In case of vertical surface, the sheathing or iron sheets shall be adequately fixed. While fixing the sheathing with the planks, it must be ensured that head of the nails do not protrude above the plate. The steel plate sheet thickness shall be as specified in the Work item.

7.2.4 Oil for Forms

Unless some other form of oil is specified, refined pale paraffin mineral oil, raw linseed oil shall be used for wood forms. For steel forms the oil shall consist of refined mineral oil/raw linseed oil suitably compounded with one or more ingredients which are approved for the purpose.

7.2.5 Soap Solution for surface treatment

Soap solution for surface treatment of formwork shall be prepared by dissolving yellow soap in water to get the consistency of paint.

7.2.6 Nails

Mild Steel wire nails, shall be bright finished and of adequate strength. The type and size (length or designation) shall be as indicated or directed by the Engineer. Mild Steel wire nails shall conform to IS: 723-1972 Specification for Steel Countersunk Head Wire Nails (as amended from time to time).

7.2.7 Rope

Rope for use in formwork and centring shall consist of good quality munj ban or other equal and approved quality. It shall be new and stout.

7.3 Workmanship

7.3.1 Classification of Form Work

Formwork shall be classified depending upon the type of finish required for a particular work and will fall in any of the following four categories:

i) Formwork for Rough Finish: Formwork required to give a concrete surface which is either hidden from view or requires to be separately finished with plastering or rendering.

ii) Formwork for Fair Finish: Formwork required to give a concrete surface free from joint marks, honey combing etc. and is presentable without further treatment.

iii) Formwork for Medium Smooth Finish: Form work required to give a concrete surface which may show some joint marks which may not be objectionable (on account of forming a pattern, by itself or otherwise not objectionable).

iv) Formwork for Textured or Decorative Fine Finish for Architectural Concrete: Formwork required to give a surface with a clear impression of lines according to the pattern specified by the Architect in the drawings, without requiring any treatment. This type of formwork will be further classified as under:

a) Formwork with ordinary timber planking,

b) Formwork with wr0ught timber i.e. sheathing having planed surface,

c) Formwork with sheathing having tongued and grooved board/plywood lining/ steel sheets, and

d) Formwork with sheathing having special lining formed by providing formwork with smooth surface in bands of required sizes and at the required place as per the pattern specified in the architectural drawings.

7.3.2 General Requirements

7.3.2.1 The form work shall be rigid and so constructed as to retain the shape and dimensions of the member being cast. It shall have sufficient strength and rigidity to withstand the load of concrete, and vibrations, movement of men, materials and plants and any other incidental loads without excessive deflection beyond permissible limits.

7.3.2.2 The form work shall be so constructed as to be removable in sections by unscrewing or otherwise loosening them without hammering or levering with force. Only wedges, clamps, bolts or screws etc. shall be used in preference to nails or spikes. All side pieces shall be easily removable without disturbing the bottom pieces. Where however, use of nails and spikes become unavoidable, these shall be left projecting so that they can easily be withdrawn.

7.3.2.3 If at any stage of work during or after placing concrete in the structure, the form work sags or bulges out beyond the required shape of the structure, the concrete shall be removed and work must be redone with fresh concrete and adequately rigid form work at the cost of the Contractor. Details of shuttering and centring shall be subject to the approval of the Engineer.

7.3.3 Propping of Centering

7.3.3.1 The props shall consist of ballies or brick masonry pillars laid in mud mortar. Ballies shall be placed at a spacing of 1 to 1.2 metres and shall rest squarely on wooden sole plates of 40 mm thickness and with a minimum bearing area of 0.1 sq. metres. Double wedges shall be provided between the sole plate and the wooden prop so as to facilitate tightening and easing of shuttering without jarring the concrete. In case brick masonry pillars are used as

props, the wooden sole plates shall be provided at the top of pillars and double wedges inserted between the sole plate and the bottom of shuttering.

7.3.3.2 In case of structures with two or more floors, the weight of concrete and centering and shuttering of any upper floor shall be suitably supported on at least two floors below the same. In such cases the props of upper floors must necessarily come over the props of the lower floors. The formwork and concreting of the upper floors shall not be done until the concrete of the lower floor has set for at least 14 days.

7.3.4 Shuttering

7.3.4.1 Shuttering shall be either of wooden planking of 38mm minimum thickness with or without steel sheet lining or of steel plates stiffened suitably by steel angles and would be such as to give the required type of finish on the surface. The shuttering shall hive smooth and even surface and the joints shall not permit any leakage of cement grout or slurry.

7.3.4.2 Unless otherwise desired, all angles in concrete work shall be sharp and well defined. Where, however, a rounded edge, bevelled edge or moulding is required the provision shall be made in the form itself. Openings for fan clamps and other fittings connected with services shall be provided in the shuttering as directed by the Engineer.

7.3.4.3 Form lining shall be such as would not discolour the concrete nor would interfere with the normal chemical reaction of cement. When steel sheets are used for lining, the sheets shall be placed and mounted on the forms with minimum amount of kinks and other imperfections.

7.3.5 Surface treatment for shuttering

7.3.5.1 Forms shall be cleaned of all dust, wood shavings, dirt and other matter by washing with water. The process is facilitated by providing draining holes in the shuttering. The surface shall then be coated with soap solution applied before concreting is done. Soap solution for the purpose shall be prepared by dissolving yellow soap in water to get consistency of paint. Alternatively coats of raw linseed oil/refined pale paraffin mineral oil or form oil of approved manufacture may be applied. In case steel shuttering is used, soap solution or raw linseed oil shall be applied after thoroughly cleaning the surface.

7.3.5.2 The oil or coating shall be applied with a brush or sprayed so as to cover the entire surface evenly. Care shall be taken that the coating, does not get on construction joint surfaces and reinforcement bars. It shall also not cause softening or permanent staining of concrete surface nor shall impede the wetting of surfaces to be water cured.

Special care shall be taken in case of small grooves. The form strips shall be oiled or coated thoroughly so as to prevent swelling of the forms and consequent damage to the concrete on removal of forms.

7.3.6 Camber

The shuttering for beams and slabs shall have camber of 4 mm per metre (1 in 250) or as directed by the Engineer, so as to offset the subsequent deflection. For cantilevers, the camber at free end, shall be 1/50th of the projected length or as directed by the Engineer.

7.3.7 Erection or Assemblage of Forms

Formwork shall be erected true to line, vertical or battered to proper slope as required and free from twist. It shall be so assembled as to facilitate easing and removal of the various parts in proper sequence without jarring the concrete. The completed form work shall be inspected and approved by the Engineer before placing reinforcement and laying concrete.

7.3.8 Ties

Metal rods or bolts are used as form-ties to hold the forms in position and to prevent bulging during concreting. Normally mild steel bolts are used varying in diameter from 10 mm to 20 mm, the smaller sizes being generally sufficient for bolts in direct tension in column and wall shuttering while the larger sizes are used for bolts subject principally to transverse loading. The threads of the bolts should be well-greased and any adhering concrete spilling cleaned from them as often as practicable. The diameter of holes through the timber should not be more than 1.5 mm greater than the diameter of the bolt. The bolts are removed when the forms are struck. Removal of bolts passing through set concrete can be made easier by well greasing the bolt or by giving the bolt half a turn while the concrete is only partly set. These bolts to be used as ties should be ordered in generous overall lengths with ample threaded length. Excess length can be readily taken up by packing and this enables us to use the bolts in any type of work. Sometimes wire ties are also used but their use is restricted to such places where the concrete surface is to be covered by subsequent finishing materials as the ends of wire are liable to give

objectionable rust stains if concrete surface is left uncovered. The wire ties are drawn tight without exhibiting spring and are left in the concrete, the projecting ends being clipped off after removing shuttering. Wire ties are made of black annealed iron wire No. 9-16 gauge.

7.3.9 Spreader

7.3.9.1 Spreaders are provided in the forms to prevent the sides being forced in when the ties are tightened. There are many types of spreaders and most common of these are old fashioned wooden spreaders made by ripping of 25 rnm boards. Wooden spreaders are removed as the concreting proceeds. Concrete spreaders are also quite common and these are cast in lengths equal to the thickness of wall, column or beam. They are usually 50 mm x 50 mm in cross-section and have a hole in the centre to allow the tie bolt to pass through. The advantage of these spreaders is that they need not be removed while the concreting proceeds and the removal of tie is very easy.

Where walls are subjected to water pressure on one side and are required to be water-tight, the ties are not removed and they are so provided that the clearance between their ends and the concrete surface is not less than 32 mm.

7.3.9.2 Arrangement of ties and spreaders

Different arrangements of ties and spreaders are shown in the sketches given in Fig. 2.

Type-I is the common form of threaded rod provided with a nut and plate at each end. Wooden spreader is used and the rod is entirely withdrawn from the wall when the forms are stripped.

Type-II shows a tie consisting of standard threaded rod provided with a nut and plate at each end like Type-I but with a concrete spreader.

Type-III shows a tie consisting of straight unthreaded pencil rod with "buttons" or clamps which arc slipped over the rod and bear against walls. The clamps grip the rod by means of a set screw which puts a crimp in the rod to prevent the form from spreading. A wooden spreader is used with this kind of tie, which is removed as the concreting proceeds. The rods are entirely withdrawn from the wall when the form is struck.

Type-IV shows a tie consisting essentially of two lag screws which are removed from the wall when the forms are stripped and a part that remains in the wall into which the lag screw are threaded. This inner part must be short enough so that no metal will remain closer than 40 mm of the outside wall surface when the lag screws are removed. A wooden spreader must be used with this tie which is withdrawn as the concreting proceeds. The holes left by the removal of lag screws are immediately rammed with suitable toothed reamers, so as to leave the surface of the holes clean and rough. The holes are then completely filled with mortar and the surface is finished to match the adjacent concrete.

7.3.10 Striking/Removal of Forms

Forms shall be removed gently. They shall be eased carefully in order to prevent the load being suddenly transferred to concrete. Form work shall not be struck and removed until the concrete has attained strength to take at least twice the stress to which concrete may be subjected at the time of removal. The period that shall elapse after the concrete bas been laid and before easing and removal of centring and shuttering is undertaken shall be as follows:

S. N.	Part of structure	Periods*
1.	Slides of foundations, columns and walls.	48 hours
2.	Underside of slabs up to	
	a) 4.5 m span.	7 days
	b) Over 4.5 m span.	14 days
3.	Under side of beam soffits and arches up to	
	a) 6 m span.	14 days
	b) Over 6 m span & upto 9 m.	21 days
	c) Under side of beams and arches over 9 m.	28 days
4.	Domes, shells vaults, folded plates & structures of special nature	As per written instructions of Engineer.

* This period is given for concrete work using Ordinary Portland Cement. For rapid hardening cement, a period equal to $3/7^{th}$ of the above period will be sufficient in all cases except vertical sides of slabs beams etc. in which case it shall be 24 hours. In case of frost or bad weather the periods may be suitably increased at the discretion of Engineer.

In slab and T-beam construction, sides shall be stripped first, then the underside of slab and lastly that of the beam.

In case of cantilever slabs and beams, centering shall remain till structures for counter acting or holding down have been erected and have attained sufficient strength.

The periods as mentioned in the above table are for normal weather conditions in plains when temperature is above 21^0 C (70^0 F). In cold weather conditions, when temperature is below 10^0 C (50^0 F), the above periods may be doubled. For a temperature of 10^0 C to 21^0 C (50^0 F to 70^0 F), the above periods may be increased proportionately.

For pre-stressed units the side forms shall be released as early as possible after 12 hours and soffit forms shall permit without restraint deformation of the member when pre-stress is applied.

All form work shall be removed without using any damage to the concrete. Centering shall be gradually and uniformly lowered in such a manner as to avoid any shock or vibrations. Supports shall be removed in such a manner as to permit the concrete to take stresses due to its own weight uniformly and gradually. Any work damaged through premature or careless removal of form shall be reconstructed at the cost of the Contractor.

The Engineer shall be informed in advance by the Contractor of his intention to strike any form work.

While fixing the time for form work, due consideration shall be given to the local conditions, character of the structure, weather and other conditions that influence setting of concrete and the materials used in the mix.

7.4 Measurements

Form work shall be measured as the area in square metres of shuttering in contact with concrete except in the case of inclined slab, and portion of curved shells requiring shuttering both on the underside and upper side in which case only area of underside shall be measured for payment. Dimensions shall be measured correct to a centimeter and areas shall be worked out correct to two decimal places.

No deductions shall be made for openings up to 0.4 m^2 in area.

Formwork to secondary beams shall be measured up to the sides of main beams but no deduction shall be made from the form work of the main beam at the intersection point. No deduction shall be made from the form work of a column at intersection of beams.

Where it is not specifically stated in the description of the item that formwork shall be paid for separately, the rate of R.C.C. items shall be deemed to include the cost of form work. Items involving height of propping and centering in excess of between supporting floor and ceiling shall be measured separately for different heights as under:

i) Height between 4 m to 5 m.

ii) Height between 5 m to 6 m.

iii) Height between 6 m to 7 m.

The edges of slabs and beams in floors and walls shall be measured in running metre correct to the nearest cm.

7.5 Rate

7.5.1 Unless otherwise stated, the labour rates include handling of all materials within 100 m.

7.5.2 These rates are applicable for form work comprised of ordinary timber planking unplaned so as to give a rough finish. In case of planks are planed so as to give a medium smooth finish, the labour rates shall be increased by 3% and through rates shall also be increased corresponding to this increase in the labour rates. In case the timber planking having special lining is used so as to give the exposed concrete work the textured or decorative even surface for architectural purposes, the labour and through rates shall be increased by 5%. The increase of 3% to 5% is applicable only on the rates as per item No. 8.1 of the HPPWD Schedule.

7.5.3 The rates are applicable to all conditions of working and at all floors. Nothing extra shall be payable on account of extra lift of materials involved. The rates shall include the cost of materials and labour for various operations involved such as:

(a) Splayed edging and notching, allowances for overlaps and passing at angles, centring, shuttering, strutting, propping, bolting, nailing wedging, easing, striking and removal.

(b) Filleting.

(c) Dressing with oil.

(d) Raking or circular cutting.

7.5.4 (a) The rates are applicable for four metres height of propping and centering below supporting floor. For heights between 4 metres to 7 metres extra rates as per schedule shall be paid. These extra rates are exclusive of the cost of supporting brick/stone/C.C. Pillars if required at site. In case, these are used additional rates for these shall be paid after recovering the cost of salvaged materials.

In case the supporting brick/stone/C.C. pillars are required at site and extra rate for the same is to be given to the Contractor, then extra rates should be given for the net increase in height after deducting the height of the brick/stone/C.C. pillars. The provision of brick/stone/C.C pillars has not been taken into consideration up to a height of 4 metres, and these need not be constructed up to a height of 4 metres except otherwise the Engineer so directs.

(b) In case the supporting brick/stone/C.C. pillars are required at site and extra rate for the same is to be given to the Contractor, then extra rates should be given for the net increase in height after deducting the height of the brick/stone/C.C. pillars. The provision of brick/stone/C.C. pillars has not been taken into consideration upto a height of 4 metres, and these need not be constructed up to a height of 4 metres except otherwise the Engineer so directs.

7.5.5 The rates include carriage by mechanical transport up to 1 km, and head- load up to 100 metres.

7.5.6 The wastage at the time of fixing of centering/shuttering has been taken into consideration. Also the rates include the wastage on account of repeatedly usage of the material.

7.5.7 Where the inclination to horizontal plane exceeds 300 the shuttering must be provided on both underside and upper side, the area of the underside only shall be measured for payment. The rate includes the provision of shuttering of both sides.

7.5.8 In case of arches, the rate includes provision of fittings such as straps, bolts etc. and their carriage. The rate includes labour such as Carpenter, Beldar for assembling erection, dismantling and cleaning.

8. CONCRETE WORK

[Note: Latest IS Codes including any amendments shall be followed over and above the HPPWD Specifications (Vol. I), 1990 and such code provisions shall supersede the following specifications, as applicable.]

8.1 Cement Concrete

8.1.1 General

These specifications cover the requirements of cement concrete for use in various components of structures.

For all items of concrete in any structural portion of the bridge or its components; controlled concrete shall be used unless otherwise specified when ordinary concrete of the mix shown on drawings or as directed by the Engineer may be used. These specifications shall apply to cement concrete for ordinary structures and not for dams or any other massive structures in which case the reference may be made to separate specifications. The essentials to make a good concrete are listed briefly as below:

i) Fresh cement, and enough of it.

ii) Not too much mixing water.

iii) Clean, hard sand and stone.

iv) A proper balance between the amounts of sand and stone-not too much of either.

v) Carefully measured materials for each batch.

vi) Thorough mixing.

vii) Careful and uniform placing of concrete.

viii) Concrete kept damp or covered for several days.

8.1.2 Materials

8.1.2.1 Cement

The type of cement to be used shall be subject to the approval of Engineer and it shall conform to specifications given below.

8.1.2.1.1 General

8.1.2.1.1.1 Unless otherwise specified cement shall conform to the following Indian Standard specifications:

(a) (i) Ordinary Portland cement, (ii) Rapid Hardening Portland Cement, and (iii) Low Heat Portland Cement shall conform to IS: 269-1989.

(b) Portland blast furnace slag cement shall conform to IS: 455-1989.

(c) Portland Pozzolana cement shall conform to IS: 1489-1991.

(d) Masonry cement shall conform to IS: 3466-1988.

(e) White Portland cement shall conform to IS: 8042-1989.

8.1.2.1.1.2 Supply

The cement shall be packed in bags (of gunny, malt-ply paper of cloth) net weight of each bag being 50 kg. Alternatively it may also be supplied at site in silos installed for the purpose of supply.

8.1.2.1.1.3 Stacking and Storage

Cement shall be stored at the work site in such a manner as to prevent deterioration due to moisture.

Cement shall be stored and stacked in bags in dry and water proof sheds. The bags shall be stacked at least 15 to 20 cm clear above the floors and 25 to 35 cm clear off the walls to prevent deterioration. Cement bags shall be kept free from the possibility of any dampness or moisture coming in contact with them. Cement shall be used in the order in which it is received. Each consignment of cement shall be stacked separately therein to permit easy access for inspection and facilitate removal. Cement bags shall not be stacked more than 12 bags high to avoid lumping up under pressure.

Storage of cement at site of work shall be at the Contractor's expense and risk in the event of any damage occurring to cement due to faulty storage or on account of negligence on his part. Such damage shall be the liability of the Contractor.

Where cement has been stored for over 6 months or for any reason the stored cement shows signs of deterioration or contamination, it shall be got tested before use, to ascertain its strength, setting time etc.

8.1.2.1.1.4 Limitation to use

The Contractor shall use all cement issued to him on the work for which it has been supplied. Cement surplus after the completion of the work shall not be disposed of without the previous consent of the Executive Engineer in writing.

8.1.2.1.1.5 Mode of Measurement

Cement shall be measured by weight in quintals, tonne/tons or in bags of 50 kg each, as the case may be.

8.1.2.1.1.6 Unless otherwise specified, 'cement' shall mean Ordinary Portland Cement for general use. Any type of cement which does not satisfy the conditions as per ISI Standards shall be rejected.

8.1.2.1.2 Classification

8.1.2.1.2.1 Portland Cement

8.1.2.1.2.1.1 Chemical Requirements

Ordinary and rapid hardening Portland cement shall comply with the following chemical requirements:

(a) Ratio of percentage of lime to percentages of silica, alumina, and iron oxide, when calculated by the formula:

$$\frac{CaO - 0.7\ SO_3}{2.8\ SiO_2 + 1.2\ Al_2O_3 + 0.65\ Fe_2O_3}$$

: Not greater than 1.02 and not less than 0.66.

(b) Ratio of percentage of alumina to that of iron oxide: Not less than 0.66.

(c) Weight of insoluble residue: Not more than 1.5 percent.

(d) Weight of magnesia: Not more than 5 percent.

(e) Total sulphur content, calculated as sulphuric anhydride (SO3): Not more than 2.75 percent,

(f) Total loss on ignition: Not more than 4 percent.

Low heat Portland cement shall comply with the following requirements as to its chemical composition given below:

The percentage of lime after deduction of the amount necessary to combine with sulphuric anhydride present shall be not more than 2.4 times the percentage of silica plus 1.2 times the percentage of alumina and plus 0.65 times the percentage of iron oxide; nor be less than 1.9 times the percentage of silica, plus 1.2 times the percentage of alumina plus 0.65 times the percentage of iron oxide. In all other respects, low heat Portland cement shall comply with the requirements specified under item 8.1.2.1.2.1.1 (b), (c), (d), (e) and (f).

8.1.2.1.2.1.2 Physical Property Standards

(i) Soundness

Expansion by the "Le Chatelier" test not more than 100mm or 5mm after 7 days aeration, time of boiling being 3 hours. Alternatively autoclave expansion shall not be more than 0.5 percent when tested according to IS: 269-1989.

(ii) Setting Time

The setting time of the cements shall conform to the following requirements:

Setting Time	**Cement Type**		
	Ordinary	**Rapid Hardening**	**Low Heat**
(a) Initial setting time not less than	30 **Minutes**	30 **Minutes**	60 **Minutes**
(b) Final setting time not more than	600 **Minutes**	600 **Minutes**	600 **Minutes**

(iii) Compressive Strength

The average compressive strength of at least three mortar cubes of the cement shall be as follows:

Compressive Strength	**Cement Type**		
	Ordinary (kg/sqcm)	**Rapid Hardening (kg/sqcm)**	**Low Heat (kg/sqcm)**
(a) 1 day (24 hours) not less than	-	115	-
(b) 3 days (72 hours) not less than	115	210	70
(c) 7 days (168 hours) not less than	175	-	115
(d) 28 days (672 hours) not less than	-	-	265

(iv) Tensile strength

When requested by the purchaser at the time of placing the order, the average tensile strength of six mortar briquettes shall be as follows:

Compressive Strength	**Cement Type**	
	Ordinary (kg/sqcm)	**Rapid Hardening (kg/sqcm)**
1 day (24 hours) not less than	-	20
3 days (72 hours) not less than	20	30
7 days (168 hours) not less than	25	-

Cement shall not be rejected on the basis of tensile test above and no tensile strength test shall be required in case of low heat Portland cement.

(v) Heat of Hydration

The heat of hydration of low heat Portland cement shall be as follows:

(a) 7 days – not more than 65 calories per gram.

(b) 28 days – not more than 75 calories per gram.

8.1.2.1.2.2 Portland Pozzolana Cement

8.1.2.1.2.2.1 Manufacture

Portland pozzolana cement shall be manufactured either by intimately intergrinding together Portland cement clinker and pozzolana or by intimately and uniformly blinding Portland cement and fine pozzolana. Grinding method is easier and should be preferred. Where the blinding method is to be restored to due to certain reasons, care should be taken to that the blinding is as intimate as possible. The pozzolana constituent shall not exceed 25 % by weight of the Portland cement.

8.1.2.1.2.2.2 Quality

Portland pozzolana cement shall conform to the relevant Indian Standard.

8.1.2.1.2.2.3 Uses

Portland pozzolana cement produces less heat of hydration and offers greater resistance to the attack of aggressive waters than normal Portland cement. Moreover it reduces the leaching of calcium hydroxide, liberated during the setting of cement. It is particularly

useful in marine construction and mass concrete structures. While Portland pozzolana cement can generally be used wherever ordinary Portland cement is used, it is important to appreciate its limitation that the addition of pozzolana does not contribute to strength at early ages; only at later ages can one expect strengths similar to those for ordinary Portland cement.

8.1.2.1.2.3 White Cement

Thy grey colour of ordinary cement is due to the presence of an impurity of iron oxide in the raw materials, which do not contain iron oxide will be white. Contamination is also avoided during burning by using oil fuel instead of coal. The other properties of this cement are the same as those of ordinary cement. Coloured cements are prepared from white cement except in the case of red or brown cements which can be prepared from grey Portland cement. The grey or white cement is mixed with 5 to 10% of a suitable and chemically inert colouring pigment during the grinding process.

White cement is used as a rendering to give white appearance to concrete & plaster in buildings or other structures; also in white terrazzo flooring and dados. It is also necessary to use white Portland cement for the lighter shades of coloured concrete mortars and terrazzo flooring. The whiteness is secured by reducing the iron oxide to a minimum.

8.1.2.2 Aggregate

Coarse aggregates of nominal size as specified and used for each item shall conform to specifications given below.

8.1.2.2.1 Aggregates

8.1.2.2.1.1 Description and Physical Characteristics of Aggregates

8.1.2.2.1.1.1 General

To enable detailed reports on aggregates to be framed on a comparable basis, the following general headings under which the appropriate information may be given are suggested as a guide:

(a) Trade Group: For example, granite, lime stone and sand stone.

(b) Petrological Name & Description: The correct petrological name should be used and should be accompanied by a brief description of such properties as hardness, colour, grain, imperfections etc.

(c) Description of the Bulk: The degree of cleanliness, that is, freedom from dust should be stated and reference made to the presence of any pieces not representative or the bulk, such as elongated or flaky pieces.

(d) Particle Shape.

(e) Surface Texture.

8.1.2.2.1.1.2 Nomenclature of Rock

The technical nomenclature of rocks is an extensive one and for practical purposes it is sufficient to group together with those rocks having certain petro-logical characteristics in common. Accordingly, the list of trade groups given is adopted for the convenience of producers and users of stone.

8.1.2.2.1.1.3 Trade Groups of Rocks used as Aggregates

Name of trade-groups: Granite, Gabbro, Aplite, Dolerite, Rhyolite, Basalt, Sand stone, Lime Stone, Granulite, Gneiss, Schist and Marble.

8.1.2.2.1.1.4 List of Rocks placed under the appropriate Trade Groups

The correct identification of a rock and its placing under appropriate trade-group shall be left to the decision of the Geological Survey of India or any competent geologist.

Igneous Rocks

Granite Group	
Granite	Granodiorite
Granophyre	Dorite
	Synite
Gabbro Group	
Gabbro	Peridiotite
Norite	Pyroxenite
Anorthosite	Epidiorite
Aplite Group	
Aplite	Quartzreef
Porphyry	

Dolerite Group	
Dolerite	Lamprophyre
Rhyolite Group	
Rhyolite	Felsite
Trachyte	Pumicite
Basalt Group	
Andesite	Basalt

Sedimentary Rocks

Sand Stone Group	
Sand Stone	Arkose
Quartzite	Graywacke
	Grit
Lime Stone Group	
Lime Stone	Dolomite

Metamorphic Rocks

Granulite and Gneiss Groups	
Granite Gneiss	Amphibolite
Composite Gneiss	Granulite
Schist Group	
Slate	Phylite
	Schist
Marble Group	
Marble	Crystaline
	Lime stone

8.1.2.2.1.1.5 Particle Shape and Surface Texture

(i) The external characteristics of any mixture or mineral aggregate include a wide variety of physical shape, colour and surface condition. In order to avoid lengthy descriptions, it may be convenient to apply to distinctive group types of aggregates some general term which could be adopted.

(ii) The simple system shown in tables below has, therefore, been devised and is put forward in the hope that it will facilitate defining the essential features of both particle shape and surface characteristics.

Particle Shape

Classification	Description	Example
1	**2**	**3**
Round	Fully water borne or completely shaped by attrition.	River or seashore gravels, desert, seashore and windblown sands.
Irregular or partly rounded	Naturally irregular, or partly shape by attrition, and having rounded edges.	Pit-sands and gravels; land or dug flints; cuboid rock.
Angular	Possessing well-defined edges formed at the intersection of roughly planar surfaces.	Crushed rocks of all types; talus; screed.
Flaky	Material, usually angular, of which the thickness is small relative to the width and/or length.	Laminated rocks.

Surface Characteristics of Aggregates

S. No.	Group Surface Texture	Example
1.	Glassy	Black flint.
2.	Smooth	Chert, slate, marble, some rhyolite.
3.	Granular	Sand stone, colites.
4.	Crystaline	*Fine:* Basalt, trachyte, keratophyre. *Medium:* Colerite, granophyre, granulite, microgranite, some lime stones, many dolomites. *Coarse:* Gabbro, gneiss, granite, granodiorite, syenite.
5.	Honey combed and porous	Scoriae, pumice, trass.

(iii) Surface characteristics have been classified under five headings or groups. The grouping is broad and is not supposed to be a precise petro-graphical classification, but is based upon a visual examination of hand specimens. With certain materials, however, it may be necessary to use a combined description with more than one group-number for an adequate description of the surface texture, for example, crushed gravel 1 and 2, colites 3 and 5.

8.1.2.2.1.2 Crushed Stones (One size)

8.1.2.2.1.2.1 Scope

This standard covers the requirements for aggregates, crushed or uncrushed, derived from natural sources, such as river terraces and river beds, glacial deposits, rocks boulders and gravels, for use in the production of concrete for normal structural purposes including mass concrete works, road works etc.

8.1.2.2.1.2.2 General

Aggregate most of which is retained on 4.75 mm I.S. Sieve and containing only as much final material as is permitted for the different types is described as coarse aggregates. This shall be broken from hard stone obtained from the approved quarry. The quarry shall be approved by the Executive Engineer. The aggregates shall be hard, strong, dense, durable clean, free from veins, adherent coatings, injurious amounts of disintegrated pieces, alkali, vegetable matter and other deleterious substances. As far as possible, flaky, scoriaceous and elongated pieces shall be avoided. It shall also be free from soft, friable, thin, elongated or laminated pieces and shall be roughly cubical in shape. It shall be clear from dirt. If coarse aggregates contain more than the prescribed limits of clay or mud etc., it shall be properly washed and dried before mixing with other ingredients to make concrete.

8.1.2.2.1.2.3 Deleterious Materials

Coarse aggregates shall not contain any harmful material such as iron pyrites, coal, mica, shale or similar laminated material, clay, alkali, soft fragments, sea shells, organic impurities etc., in such quantities so as to adversely affect the strength and durability of concrete. In addition to above in reinforced concrete, the aggregate shall not contain any material which might attack the reinforcement. The maximum quantities of deleterious materials in the coarse aggregate, when determined in accordance with IS: 2386-1963 (Part 2) "Method of test for Aggregates for Concrete", shall not exceed the limits (Percentage by weight) laid down in the following table. However, the Engineer, at his discretion, may relax some of the limits as a result of some further tests and evidence of satisfactory performance of the aggregates.

Limits of Deleterious Materials

S.	Deleterious Substance	Method of Test	Fine Aggregate (% by Weight – Max.)		Coarse Aggregate (% by Weight – Max.)	
			Uncrushed	Crushed	Uncrushed	Crushed
(i)	Coal & lignite	IS: 2386 (Part2) - 1963	1.00	1.00	1.00	1.00
(ii)	Clay lumps	-do-	1.00	1.00	1.00	1.00
(iii)	Materials finer than Sieve 75 micron	IS: 2386 (Part 1) - 1963	3.00	15.00	3.00	3.00
(iv)	Soft fragments	IS: 2386 (Part 2) - 1963	-	-	3.00	-
(v)	Shale	-do-	1.00	-	-	-
(vi)	Total of percentages of all deleterious materials (except mica) including S. No. (i) to (v) for Col. 4, 6 & 7 and S. No. (i) and (ii) for Col. 5 only.		5.00	2.00	5.00	5.00

Note 1: The presence of mica in the fine aggregate has been found to reduce considerably the durability and compressive strength of concrete and further investigations are underway to determine the extent of the deleterious effect of mica. It is, advisable, to investigate the mica content of fine aggregate and make suitable allowances for the possible reduction in the strength of concrete of mortar.

Note 2: The aggregate shall not contain harmful organic impurities (tested in accordance with IS: 2386 (Part 2)-1963 in sufficient quantities to affect adversely the strength and durability of concrete. A fine aggregate which fails in the test for organic impurities may be used, provided that when tested for the effect of organic impurities on the strength of mortar, the relative strength at 7 and 28 days in accordance with 7 of IS: 2386 (Part 6)-1963 is not less than 95 percent.

8.1.2.2.1.2.4 Aggregate Crushing Value

The aggregate crushing value, when determined in accordance with IS: 2386 (Part 4)-1963, shall not exceed 45 percent for aggregate used for concrete other than for wearing

surfaces, and 30 percent for concrete for wearing surfaces, such as runways, roads and pavements.

8.1.2.2.1.2.5 Aggregate Impact Value

As an alternative, the aggregate impact value may be determined in accordance with the method specified in IS: 2386 (Part 4)-1963. The aggregate impact value shall not exceed 45 percent by weight for aggregates used for concrete other than for wearing surfaces and 30 percent by weight for concrete for wearing surfaces, such as runways, roads and pavements.

8.1.2.2.1.2.6 Aggregate Abrasion Value

Unless otherwise agreed to between the purchaser and the supplier the abrasion value of aggregates, when tested in accordance with the method specified in IS: 2386 (Part 4)-1963 using Los Angeles machine, shall not exceed the following values:

(a)	For aggregates to be used in concrete for wearing surfaces.	30 percent
(b)	For aggregates to be used in other concrete.	50 percent

8.1.2.2.1.2.7 Soundness of Aggregate

For concrete liable to be exposed to the action of frost, coarse and fine aggregates shall pass a sodium or magnesium sulphate accelerated soundness test specified in IS : 2386 (Part 5)-1963, the limits being set by agreement between the purchaser and the supplier, except that aggregates failing in the accelerated soundness test may be used if they pass a specified freezing and thawing test satisfactory to the user.

8.1.2.2.1.2.8 Size and Grading of Aggregates

The coarse aggregates shall be supplied in the nominal size as given in the tables below.

Coarse Aggregates

I.S. Sieve Design-ation	**Percentage Passing for Single-sized Aggregate of Nominal Size**						**Percentage Passing for Graded Aggregate of Nominal size**			
	63 mm	**40 mm**	**20 mm**	**16 mm**	**12.5 mm**	**10 mm**	**40 mm**	**20 mm**	**16 mm**	**12.5 mm**
1	**2**	**3**	**4**	**5**	**6**	**7**	**8**	**9**	**10**	**11**
80 mm	100	-	-	-	-	-	100	-	-	-
63 mm	85 to 100	100	-	-	-	-	-	-	-	-
40 mm	0 to 30	85 to 100	100	-	-	-	95 to 100	100	-	-
20 mm	0 to 5	0 to 20	85 to 100	100	-	-	30 to 70	95 to 100	100	100
16 mm	-	-	-	85 to 100	100	-	-	-	90 to 100	-
12.5 mm	-	-	-	-	85 to 100	100	-	-	-	90 to 100
10 mm	0 to 5	0 to 5	0 to 20	0 to 20	0 to 45	85 to 100	10 to 35	25 to 55	30 to 70	40 to 85
4.75 mm	-	-	0 to 5	0 to 5	0 to 10	0 to 20	0 to 5	0 to 10	0 to 10	0 to 10

Coarse Aggregates for Mass Concrete

The following aggregates for mass concrete works shall be in the size as per the following table:

Class & Size	**I.S. Sieve Designation**	**Percentage Passing**
Very Large, 150 to 80 mm	150 mm	90 to 100
	80 mm	0 to 10
Large, 80 to 40 mm	80 mm	90 to 100
	40 mm	0 to 10
Medium, 40 to 20 mm	40 mm	90 to 100
	20 mm	0 to 10
Small, 20 to 4.75 mm	20 mm	90 to 100

Class & Size	I.S. Sieve Designation	Percentage Passing
	4.75 mm	0 to 10
	2.36 mm	0 to 2

8.1.2.2.1.2.9 When coarse aggregates brought to the site is ungraded, single size coarse aggregates of different nominal size shall be mixed at site with other ingredients of concrete, either directly in the mixture or on the platform in the proportion indicated in the following table:

Cement concrete mixture	Nominal size of graded aggregate required (mm)	Part of single size aggregate of sizes				
		50 mm	40 mm	20 mm	12.5 mm	10 mm
1:6:12	63	9	-	3	-	-
1:6:12	40	-	9	3	-	-
1:5:10	63	7.5	-	2.5	-	-
1:5:10	40	-	7.5	2.5	-	-
1:4:8	63	6	-	2	-	-
1:4:8	40	-	6	2	-	-
1:3:6	63	4.5	-	1.5	-	-
1:3:6	20	-	-	4.5	-	1.5
1:2:4	40	-	2.5	1	-	0.5
1:2:4	20	-	-	3	-	1
1:2:4	12.5	-	-	-	3	1
1:1-1/2:3	20	-	-	2	-	1

Note: The proportions indicated in table above are by volume. When considered necessary, these proportions may be varied marginally by Engineer after making sieve analysis of aggregate brought to site for obtaining required graded aggregate. No adjustments in rates shall be made for any variations in the proportions so ordered by the Engineer. If single size coarse aggregates are not premixed at site to obtain the graded coarse aggregate required for the mix, the volume of single size aggregates shall be suitably increased to account for reduction in total volume at the site of mixing.

8.1.2.2.1.2.10 Supply

The coarse aggregates proposed to be used for the concrete work shall be got approved from the Engineer before the start of the work. All subsequent supplies shall preferably be obtained from the same source.

8.1.2.2.1.2.11 Stacking

Only the aggregates, satisfying the specification requirements, shall be conveyed to the roadside and stacked. Each size of aggregate shall be stacked separately. Likewise, materials obtained from different quarry sources shall be stacked separately in locations not liable to inundation or foods.

The dimensions of the stacks and their location shall be as approved by the Engineer, Where the material is improperly stacked; the Engineer shall have the right to order complete re-stacking of the materials to specifications at the cost of the Contractor.

Mineral filler shall be supplied in dry state in bags or other suitable containers approved by the Engineer and shall be protected from weather, dampness, etc., so as to prevent deterioration in quality.

The coarse aggregates shall be supplied at site in regular stacks as mentioned below:

Size of stack (in meters)

Length	Breadth	Height
2.0	2.0	0.50
or 5.0	5.0	1.50
or 5.0	1.0	0.50

8.1.2.2.1.2.12 Storage

The materials shall be stored so as to prevent contamination and stagnation. If stored in piles on ground, the aggregate shall not be dumped on loam, mud or grass so that, on re-handling, dirt and rubbish are not carried to the concrete. If a clear and hard surface is not available, a platform of planks or a floor of bricks shall be prepared to receive the aggregates.

The aggregates shall be stored in such a way as to prevent admixture of foreign materials. Different sizes of fine or coarse aggregates shall be stored in separate stock-piles sufficiently away from each other to prevent intermixing of the materials at the edges of the piles.

8.1.2.2.1.2.13 Measurements

Coarse and fine aggregates supplied at site of works shall be paid for in cubic metres. The actual volume of the aggregates to be paid for shall be computed after deducting the following percentages from the volume computed by stack measurements:

S.	Standard size of aggregates	Percentage reduction in volume computed by stack measurements to arrive at the volume to be paid for
1.	75 mm and 63 mm	12.5
2.	40 mm and 25 mm	10
3.	20 mm, 12 mm, 10 mm & 6 mm	5
4.	Fine aggregate	Nil

Unless otherwise directed, measurements shall not be taken until sufficient material for use on the road have been collected and stacked. Immediately after measurement, the stacks shall be marked by whitewash or other means as directed by the Engineer.

8.1.2.2.1.3 All-in-Aggregates

8.1.2.2.1.3.1 General

For all common properties it shall conform to "Coarse Aggregate". All-in-aggregate shall be composed of fine and coarse aggregates collected directly from pit, river bed or crushing plants.

8.1.2.2.1.3.2 Grading of all-in-aggregates

If combined aggregate containing both fine and coarse aggregate are available, these need not to be separated into fine and coarse but necessary adjustments shall be made in the grading by addition of single-sized aggregates/fine aggregates to obtain the specified grading. For 40 mm and 20 mm nominal size of all-in-aggregate, the final grading shall be as under:

All-in-Aggregate

I.S. Sieve Designation	Percentage passing for all-in-aggregate of:	
	40 mm nominal size	20 mm nominal size
80 mm	100	-
40 mm	95 to 100	100
20 mm	45 to 75	95 to 100
4.75 mm	25 t0 45	30 to 50
600 micron	8 to 30	10 to 35
150 micron	0 to 6	0 to 6

8.1.2.2.1.3.3 Sample

Samples of all-in-aggregate proposed to be used for the concrete work shall be got approved from the Engineer before the start of work. All subsequent supplies shall preferably be obtained from the same source.

Note: All-in-aggregate is not recommended to be used in reinforced concrete work, as the grading is liable to vary and the wide range of sizes increases rate of segregation.

8.1.2.2.1.4 Water-Borne Stone aggregate (One Size)

Same as under section 8.1.2.2.1.2 above.

The fine aggregate used shall conform to specifications given below.

8.1.2.2.2 Sand

For Plasters, sand shall be used as per IS: 1542-1992, and for Masonry mortars the sand shall be used as per IS: 2116-1980, and sand of fine aggregate for Cement Concrete Work shall conform to IS: 383-1970. The quarry from which the sand is obtained shall be subject to the approval of the Executive Engineer.

8.1.2.2.2.1 General

Natural sand is found as a result of disintegration of rock, which is deposited by stream or glacial agencies. Sand may be obtained either from river bed or from pits.

Sand consists of cohesion less aggregates of rounded, sub-rounded, angular, sub-angular, or flat fragments of more or less unaltered rocks or minerals, 90 per cent of the particles being greater than 0.06 mm and less than 2 mm in size.

Sand which contains 90% of particles of size greater than 0.06 mm and less than 0.2 mm in fine sand.

Sand which contains 90% of particles of size greater than 0.6 mm and less than 2 mm is coarse sand.

8.1.2.2.2.1.1 Qualities of Sand

Sand shall be hard, durable, clean and free from adherent coatings and organic matter and shall not contain any appreciable amount of clay balls or pallets. Sand shall not contain harmful impurities such as iron pyrites, coal particles, lignite, mica, shale or similar laminated material, alkali and organic impurities in such form or quantities as to affect the strength or durability of concrete or mortar. Sand to be used for places where reinforcement is used shall not contain any material liable to attack the steel reinforcement.

8.1.2.2.2.1.2 Sand for Mortars

In addition to the requirements given in the foregoing Clause 8.1.2.2.2.1.1 unless otherwise specified by the Engineer, the maximum quantities of silt, in sand not exceed the following limits, determined by field test with measuring cylinder - 8%.

8.1.2.2.2.1.3 Grading of Coarse Sand

The grading of coarse sand shall be within the limits specified below:

I.S. Sieve Designation (IS: 460-1985)	Percentage by Weight Passing I.S. Sieve
4.75 mm	100
2.36 mm	90 – 100
1.18 mm	70 – 100
600 micron	30 – 100
300 micron	5 – 70
150 micron	0 – 15

Sand whose grading falls outside the above limits due to excess or deficiency of coarse or fine particles shall be processed to comply with the standard by screening through a suitably sized sieve and/or blending with required quantities of suitable size of sand particles.

8.1.2.2.2.2 Fine Sand for Mortars

8.1.2.2.2.2.1 General

Where coarse sand is not available or where its cost is prohibitive, fine sand, not conforming to the specifications of sand as given above, may be used if so specified by the Engineer after ascertaining the strength and suitability of mortar prepared out of fine sand. (Such detailed provision shall be clearly indicated in the general specifications in the tender documents.)

8.1.2.2.2.2.2 Qualities of Fine Sand

Fine sand shall be obtained from river beds not affected by tidal waters of the sea and shall be clean, sharp and free from excessive deleterious matter. The sand shall not contain more than 8 percent of mud and silt as determined by field test with a measuring cylinder. The method of determining silt content is given below:

A sample of sand to be tested shall be placed without drying in a 200 ml measuring cylinder. The size of sample shall be such that it fills the cylinder up to the 100 ml mark.

Clean water shall be added up to 150 ml mark.

The mixture shall than be shaken vigorously and the contents allowed to settle for 3 hours.

The height of the silt visible as settled layer above the sand shall be expressed as percentage of the height of the sand below.

The sand containing more than the above allowable percentage of silt shall be washed so as to bring the silt contents within the allowable limits.

8.1.2.2.2.2.3 Fineness Modulus of Coarse/Fine Sand

This shall not be less than 2.5 and 1 (respectively for coarse fine sand as determined by the following method:

The fineness modulus of sand shall be determined by taking 500 grams of it from representative sample of sand and passing it successively through the six Indian Standard sieves No. 4.75 mm, 2.36 mm, 1.18 mm, No. 600 microns, 300 microns and No. 150 microns. The percentage of sand retained on each sieve successively shall be noted and the cumulated percentage retained on each sieve computed. The total of cumulative percentages retained on the six sieves divided by 100 shall give the fineness modules of

sand. The following example illustrates the computation of finesses modulus of a sample of sand:

Sieve description as per I.S.	Percentage retained on each sieve respectively	Cumulative Percentage retained on successive sieves
4.75 mm	0	-
2.36 mm	1.0	1.0
1.18 mm	10.5	11.5
600 microns	49.0	60.5
300 microns	33.5	94.0
150 microns	5.0	99.0
Pan	1.0	266.0
Total	100.0	266.0
	Fineness Modulus	*= 266.0 / 100.0 =2.66*

8.1.2.2.2.3 Bulking of Sand

In the nominal mortar mixes specified by volume sand is assumed to be dry. Dry and saturated sand almost have the same volume but damp sand increases in volume (Bulking), depending upon moisture content. Due allowance for bulking of sand shall be made while preparing the mortar mixes based on volume measurements the actual amount of bulking varies with the grading of the sand. Bulkage of sand shall be determined by the methods prescribed below.

Bulking of Fine aggregate Sand (Field Methods)

Two methods are suggested for, determining the bulking of sand/fine aggregate. The procedure may be suitably varied, if necessary. Both depend on the fact that the volume of inundated sand/fine aggregate is the same if the sand/fine aggregate were dry.

Method 1: Put sufficient quantity of sand loosely into a container until it is about two third full. Level off the top of the sand and pushing a steel rule vertically down through the and at the middle to the bottom, measure the height. Suppose this is 'X' cm,

Empty the sand out of the container into another container where none of it is lost. Half fill the first container with water. Put back about half the sand and rod it with a steel rod, about 6 mm in diameter, so that its volume is reduced to a minimum, Then add the remainder and level the top surface of the inundated sand. Measure its depth at the middle with the steel rule. Suppose this is 'Y' cm.

The percentage of bulking of the sand due to moisture shall be calculated from the formula:

Percentage bulking = ((X/Y) - 1) x 100

Method 2: In a 250 ml measuring cylinder pour (consolidated by staking) until it reaches the 200 ml mark.

Then fill the cylinder with water and stir the sand well (the water shall be sufficient to submerge the sand completely). It will be seen that the sand surface is now below its original level. Suppose the surface is at the mark 'Y' ml, the percentage of bulking of sand due to moisture shall be calculated from the formula:

Percentage bulking = ((200/Y) -1) x 100

The allowance for bulking for any samples of sand shall be got determined [as per IS: 2386 (Part 3)-1963 Appendix A]. The following table gives the relation between the moisture content and percentage of bulking, which may be used as a rough guidance.

Moisture content (Percentage by weight)	Bulking percent (Volume)
2	15
3	20
4	25
5	30

8.1.2.2.2.4 Stacking and Storage of Sand

Sand shall be stacked in regular stacks (refer table given below) on a hard surface or platform so as to prevent the admixture or clay, dust, vegetable and other foreign matter.

S.	Material	Size of stack (in meters)		
		Length	Breadth	Height
1.	Sand	2.0	2.0	0.50
		or 5.0	5.0	1.00
		or 5.0	1.0	0.50

8.1.2.2.2.5 Mode of Measurement

Sand shall be measured in m^3 after making due allowance for the bulking due to moisture.

Allowance for bulking due to moisture shall be made as per actual test. However in the absence of actual test results the bulking percentage given under table under section 8.1.2.2.2.4 above may be used at the discretion of the Engineer.

8.1.2.3 Water

Water used shall conform to specifications given below.

8.1.2.3.1 The water used for concrete work, masonry work, making mortars, bricks etc. shall be clean and free from injurious amount of deleterious materials such as oils, acids, alkalis, salts, suspended material, vegetable or organic impurities. As a rule, water that is clear and potable shall be considered satisfactory for all these purposes. Where water can be shown to contain any sugar or an excess of acid, alkali or salt, the Engineer, may refuse the permit of its use.

The water used for curing concrete and brick work as well as for soaking bricks shall also be free from above impurities, as turbid or unclean water is likely to impart its own colour to concrete, bricks or masonry.

In case of large important concrete structures such as dams, water shall be subjected to chemical analysis with respect to its acceptability for use in mixing and curing concrete and its corrosive action on concrete. When water is to be used in compaction for soil for earthen embankment etc. it shall be free from harmful salts and also from solid materials such as roots, grass or wood, the presence of which may be likely to render difficult the formation of a compact homogeneous mass.

8.1.2.3.2 Storage

Wherever water is to be stored for construction purposes, this shall be done in proper storage tanks to prevent any organic impurities getting mixed up with it. The container for transport, storage and handling water shall be clean so as not to cause contamination or deterioration in the quality of the water.

8.1.2.3.3 Permissible Limits

As a guide, the following concentration represents the maximum permissible values of deleterious materials in water:

(i) Not more than 2 ml of 0.1 normal NaDH be required to neutralise 200 ml of the sample.
(ii) Not more than 10 ml of 0.1 normal HCl shall be required to neutralise 20 ml of sample.
(iii) Percentage of salts shall not exceed the following:

Organic	0.20%
Inorganic	0.03%
Sulphates	0.05%
Alkali-Chlorides	0.10%

8.1.3 Grades of Concrete

8.1.3.1 Controlled Concrete

For controlled concrete, design of the mix shall be arrived at after preliminary tests and in its production all necessary precautions shall be taken to ensure that the required works cube strength is attained and maintained. The controlled concrete shall be in eight grades designated as M 100, M 150, M 200, M 250, M 300, M 350, M 400 and M 450 with the suffix 'Controlled' added to it.

The proportions for ingredients chosen shall be such that concrete has adequate workability for conditions prevailing on the work in question, and can be properly compacted with the means available.

Except where it can be shown to the satisfaction of the Engineer that supply, of properly graded aggregate of uniform quality can be maintained till then, completion of work, grading of aggregate should be controlled by obtaining the coarse aggregate in different sizes and blending them in the right proportions as required. Different sizes. however, shall be stocked in separate stock piles. Required quantity of material shall be stock-piled several hours, preferably a day, before use. Grading of coarse and fine aggregate shall be checked as frequently as possible, frequency for a given job being determined by the Engineer to ensure that the suppliers are maintaining the uniform grading as approved for samples in the preliminary tests.

In proportioning concrete, the quantity of both cement and aggregate shall be determined by weight. Where the weight of cement is determined by accepting the maker's weight per bag, a reasonable number of bags shall be weighed separately to check the net weight. Where cement is weighed from bulk stocks at site and not by bags, it shall be weighed separately from the aggregates. Water shall either be measured by volume in calibrated tanks or weighed. All measuring equipment shall be maintained in a clean and serviceable condition. Their accuracy shall be periodically checked.

It is most important to keep the specified water cement ratio content and at its correct value. To this end, moisture content in both tine and coarse aggregates shall be determined as frequently as possible, frequency for a given job being determined by the Engineer according to the weather conditions. The amount of mixing water shall then be adjusted to compensate for variations in the moisture content. For the determination of moisture content in the aggregates, IS: 2386 (Part 3) shall be referred to. Suitable adjustments shall also be made in the weights of aggregates to allow for the variation in weight of aggregates due to variation in their moisture content.

Minimum quantity of cement to be used in controlled concrete shall not be less than 210 kg/m^3 in plain concrete and not less than 300 kg/m^3 in reinforced concrete structural members, The minimum quantity of cement for pre-stressed concrete work shall not be less than 360 kg/m^3 of concrete nor shall it be more than 540 kg/m^3 of concrete.

8.1.3.2 Ordinary Concrete

In case of ordinary concrete, mix is not required to be designed by preliminary tests and proportions of cement, fine aggregates and coarse aggregates are specified by volume. The ordinary concrete shall be in four grades designated as M 100, M 150, M 200 and M 250. It can also be specified by volume as given in table below.

In the designation of a concrete mix, letter 'M' refers to the mix and the number to the specified 28 days works cube compressive strength of that mix on 150 mm cubes, expressed in kg/cm^2 .

The ordinary concrete mix shall generally be specified by volume. For cement which normally comes in bags and is used by weight, volume shall be worked out taking 50 kg of cement as 0.035 m^3 in volume. While measuring aggregate by volume, shaking, ramming or hammering shall not be done. Proportioning of sand shall be as per its dry volume and in case it is damp, allowance for 'bulking' shall be made as per IS:2386 (Part 3).

Ingredients required for ordinary concrete containing one 50 kg bag of cement for different proportions of mix shall be as given in table below.

Grade of Concrete	**Mix by volume**	**Total quantity of dry aggregates by volume per 50 kg of cement, to be taken as the sum of the individual volumes of fine & coarse aggregates**	**Proportion of the aggregate of coarse aggregate**	**Quantity of water per 50 kg of cement (max.)**
1	**2**	**3**	**4**	**5**
M100	1:3:6	300 cm^3	Generally 1:2 for fine	34 Liters
M150	1:2:4	220 cm^3	Aggregate to coarse	32 Liters
M200	1:1.5:3	160 cm^3	Aggregate by volume	30 Liters
M250	1:1:2	100 cm^3	But subject to a upper limit of 1:1½ & lower limit of 1:3*	27 liters

**Note 1: The proportions of the aggregates shall be adjusted from upper limit to lower limit progressively as the grading of the fine aggregates becomes finer and the maximum size of coarse aggregate becomes larger.*

Example: For an average grading of fine aggregate (that is Zone II of IS: 383-1970) the proportions shall be 1:1½ , 1:2 and 1:3, for maximum size of aggregates 10 mm, 20 mm and 40 mm respectively.

Note 2: A mix leaner than M 100 (1:3:6) may be used for non-structural parts of the bridges, if specified on the drawing or provided in the Contract. In such case grading of aggregates shall be as specified in the Contract or on the drawings. Other requirements for mixing, placing and curing shall be the same as specified in this Section.

8.1.4 Strength Requirement of Concrete

Where ordinary Portland cement conforming to IS: 269 or Portland blast furnace cement conforming to IS: 455 is used, the compressive strength requirements for various grades of concrete controlled as well as ordinary shall be as given in tables below. Where rapid hardening Portland cement is used, the 28 days compressive strength requirements specified in tables below shall be met at 7 days.

For controlled concrete, the mix shall be so designed as to attain in preliminary tests a strength at least 33 % higher than that required on work tests. Preliminary tests need not be made in case of ordinary concrete.

Strength Requirements of Concrete (all values in kg/cm^2)

Grade of concrete	Compressive strength of 15 cm Cubes at 28 days	
	Preliminary Test (Min.)	Works Test (Min.)
1	2	3
M 100	135	100
M 150	200	150
M 200	260	200
M 250	320	250
M 300	380	300
M 350	440	350
M 400	500	400

Note 1: Preliminary Test: A test conducted in a laboratory on the trial mix of concrete produced in the laboratory with the object of:

a) designing a concrete mix before the actual concreting operation starts,
b) determining the adjustments required in the designed mix when there is a change in the materials used during the execution of work, or
c) verifying the strength of concrete mix.

Note 2: Works Test: A test conducted either in the field or in a laboratory on the specimens made on the works out of the concrete being used on the works.

Note 3: Size of cubes: In the working test, with the approval of the Engineer, 10-cm cubes may be used in place of 15-cm cubes provided the maximum nominal size of aggregate does not exceed 20mm. Even the use of 15 cm cubes should normally be restricted to concretes having a maximum nominal size of aggregate not exceeding 40 mm. Where concrete with aggregates larger than 40 mm size is required to be tested, the size of cubes should be specified by the Engineer, keeping in view that generally the length of side of the cube should be about four times the maximum nominal size of aggregate in the concrete constituting the cube specimen.

Note 4: Strength in Relation to size of the Cube: Where 10-cm cubes are used, the values obtained from tests on 10-cm cubes shall be reduced to the extent established by comparative preliminary tests with 10 and 15 cm cubes, or in the absence of such comparative tests, by 10 percentage of the value determined from the tests, in order to give the equipment strength for 15 cm cubes. Where cubes larger than 15-cm are adopted, generally no modification is necessary unless otherwise specified by the Engineer.

Note 5: Cylinder strength: Compressive strength tests may, with the approval of the Engineer, be concluded on 15 cm diameter and 30 cm high cylinders instead of on cubes. Where cylinder strength figures are adopted, the compressive streng.th figures given above shall be modified according to the formula:

Minimum cylinder comparative strength required=0.8 compressive strength specified for 15-cm cubes.

Optional Work Test Requirements of concrete (all values in kg/cm^2)

Grade of concrete	Compressive strength on 15 cm cubes (min. at 7 days)	Modules of Rupture by Beams Test, Min	
		At 72 ± 2 hours	At 7 days
1	2	3	4
M 100	70	12	17
M 150	100	15	21
M 200	135	17	24

Grade of concrete	Compressive strength on 15 cm cubes (min. at 7 days)	Modules of Rupture by Beams Test, Min	
		At 72 ± 2 hours	At 7 days
1	2	3	4
M 250	170	19	27
M 300	200	21	30
M 350	235	23	32
M 400	270	25	34

Note: Notes 3 to 5 under earlier table are also applicable to this table.

For Permissible Stresses in Concrete, reference may be made to ISI Code 456.

8.1.5 Admixtures

No materials other than the essential ingredients i.e. cement, aggregate and water, shall ordinarily be used in the manufacture of concrete or mortar. But the Engineer may permit the use of approved admixtures for imparting special characteristics to the concrete, on satisfactory evidence that its use does not in any way adversely affect the properties of concrete particularly its strength, volume changes, durability and has no deleterious effect on the reinforcement.

8.1.6 Size of coarse aggregates

Following shall be the maximum nominal size of coarse aggregate for the different items of work:

S. N.	Items of construction	Maximum nominal size of coarse aggregate
i)	RCC well curb RCC well steining and RCC piles.	40 mm
ii)	PCC well steining.	63 mm
iii)	Well cap or pile cap solid type piers abutments and wing walls; & their pier caps.	40 mm
iv)	RCC work in cross girders, deck slab, wearing course, kerb, light posts, ballast wall approach slab, etc. and hollow type piers, abutments, wings walls and their pier caps.	20 mm
v)	RCC bearings.	20 mm
vi)	For any other item of construction not covered by items (i) to (v) above.	As specified on the drawing or as desired by the Engineer in case it is not specified on drawing.

For heavily, reinforced concrete members as in the case of ribs of main beams, nominal maximum size of aggregate shall usually be restricted to 5 mm less than the minimum lateral clear distance between the main bars or 5 mm less than the minimum cover to the reinforcement, whichever is the smaller.

8.1.7 Proportioning

Proportioning shall be done by volume. Boxes of suitable size shall be used for measuring sand aggregate. The size of the boxes (material) shall be 35x25 cm and 40 cm deep. The unit of measurement for cement shall be a bag of cement weighing 50 kgs and this shall be as 0.035 m^3. While measuring the aggregate and sand, the boxes shall be filled without shaking, ramming or hammering. The proportioning of sand shall be on the basis of its dry volume and in case of damp sand, allowances for bulkage shall be made which shall be determined by the method as given in Clause 8.1.2.2.2 above.

8.1.8 Concrete mixes used for various types of work

Concrete mix shall be as specified in the Contract. If nothing is mentioned in the Contract, it shall be as specified by the Engineer in writing. A rough guide regarding the use of nominal mixes is given below:

Nominal Size	Type of work for which used
1:8:16	Foundations of buildings and light structures, and base course of floors.
1:6:12	
1:5:10	Foundations of heavy buildings, plum concrete, hearting of abutments and piers and retaining walls with stone faces in hilly areas.
1:4:8	Mass concrete and foundations of hydraulic works and heavy buildings
1:3:6	Mass concrete, bed plates, concrete blocks, canal lining.

Nominal Size	Type of work for which used
1:2:4	General R.C.C. Buildings and similar works namely beams, slabs panel walls, stairs, columns retaining walls pavements, floors, bed plates etc.
1:1-1/2:3	Important RCC structures piles, arches, impermeable construction against water heads.

8.1.9 Form Work

This shall comply with specification as given in Section 7 above.

8.1.10 Consistency

Quantity of water shall be just sufficient to produce dense concrete of required workability for the job. Accurate and strict control shall be kept on the quantity of mixing water. For ordinary concrete mix, the quantity of water required shall generally be equal to 5% by weight of aggregate plus 30% by weight of cement. From this theoretical quantity of water, deduction shall be made for the surface water present in the aggregate which may be estimated from the table given below:

Aggregate	Approximate quantity of surface water Ltrs. Cum
Very wet sand	120
Moderately wet sand	80
Moist sand	40
*Moist gravel or crushed rock	20 to 40

*The coarser the aggregate the less water it will carry.

The actual quantity of water required to be added in the field will vary with the quantity of aggregate, consistency required and surface water present in the aggregate. Therefore, the amount of water required shall be determined in the field by carrying out slump/Vee Bee Consistometer Test as described below.

Determination of Consistency of Concrete by Slump Test

1.	Scope
1.1	This method covers test for determining the consistency of concrete samples from concrete being used in construction.
2.	Specimen
2.1	The test specimen shall be formed in a mould in the form of the frustum of a cone with internal dimensions as follows: a) Bottom diameter 20 cm, b) Top diameter 10 cm, and c) Height 30 cm. The bottom and the top shall be open, parallel to each other and at right angles to the axis of the cone. The mould shall be provided with suitable foot pieces and handles. The internal surface shall be smooth.
2.2	Care shall be taken to ensure that a representative sample is taken.
3.	Sampling of Concrete
3.1	Samples of concrete for test specimens shall be taken at the mixer, or in the case of ready-mixed concrete, from the transportation vehicle during discharge. The sample of concrete from which test specimens are made shall be representative of the entire batch. Such samples shall be obtained by repeatedly passing a scope or pail through toe discharging stream of concrete, starting the sampling operation of the beginning of discharge and repeating the operation until the entire batch is discharged. The sample thus obtained shall be transported to the place of moulding of the specimen, and to counteract segregation, the concrete shall be mixed with a shovel until it is uniform in appearance. The location in the work of the batch of concrete thus sampled shall be noted for future reference. In the case of paving concrete, samples may be taken from the batch immediately after depositing on the sub-grade. At least five samples shall be taken from different portion of the pile and these samples shall be thoroughly mixed before being used to form the test specimen.
4.	Moulds

4.1	The internal surface of the mould shall be thoroughly clean dry and free from set cement before commencing the test.
5.	Procedure
5.1	The mould shall be placed on a smooth flat, non-absorbent surface. The operator should hold the mould firmly in place, while it is being filled, by standing on the foot-pieces. The mould shall be filled to about one-fourth of its height with the concrete which shall then be tamped, using 25 strokes of 16 mm diameter steel rod, 0.6m long and bullet pointed at the lower end. The filling shall be completed in successive layers similar to the first, and the top struck off so that the mould is exactly filled. The mould shall then be removed by rising vertically immediately after filling. The moulded concrete shall then be allowed to subside, and the height of the specimen measured after coming to rest.
5.2	The consistency shall be recorded in terms of millimeters of subsidence of the specimen during the test which is known as the Slump.

Determination of Consistency of Concrete by Vee-Bee Consistometer Method

1.	Scope
1.1	These sub-section deals with the determination of consistency of concrete using a Vee-Bee Consistometer, which determines the time required for transforming by vibration, a concrete specimen in the shape of a conical frustum into a cylinder.
2.	Apparatus
2.1	The Vee-Bee Consistometer consists of: a) A vibrator table resting upon elastic support. b) A metal pot. c) A sheet metal cone, open at both ends; and d) A standard iron rod.
2.2	The vibrator table (G) is 380 mm long and 260 mm wide and is supported on rubber shock absorbers at a height of about 305 mm above floor level. The table is mounted on a base (K) which rests on three rubber feet, and is equipped with an electrically operated vibrometer mounted under it operating on 65 volts or 220 volts, three phase, 50 cycles alternating current. A sheet metal cone (B) open at both ends is placed in the metal pot (A) and the metal pot is fixed on to the vibrator table by means of two wing nuts (H). The sheet metal cone is 30 cm high and its bottom diameter is 20 cm and top diameter 10 cm. A swivel arm holder (M) is fixed to the base and into this is telescoped another swivel arm (N) with funnel (D) and guide sleeve (E). The swivel arm can be readily detached from the vibrating table. The graduated rod (J) is fixed on the swivel arm and at the end of the graduated arm a glass disc (C) is screwed. The graduation of the scale on the rod records the slumps of the concrete cone in centimeters, and the volume of concrete after vibration of the cone in the pot. The standard iron rod is 20 mm in diameter and 500 mm in length. The electrical equipment mounted on the base of the Consistometer consists of a fixed plug and connector for the electric supply cable, plug and socket connection for the detachable cable connected to the vibrometer and a control switch.
3.	Procedure
3.1	A Slump test as described above is performed in the sheet metal cylindrical pot of Consistometer. The glass disc attached to the swivel arm is moved and is placed just on top of the slump cone in the pot and before the cone is lifted up the position of the concrete cone is noted by adjusting the glass disc attached to the swivel arm. The cone is then lifted up and the slump is noted on the graduated rod by lowering the glass disc on top of the concrete cone. The electrical vibrator is then switched on and the concrete is allowed to spread out in the pot. The vibration is continued until the whole concrete surface uniformly adheres to the glass disc as indicated in figure and the time taken for this to be attained is noted with a stop-watch. The time is recorded in seconds.
4.	Result
4.1	The consistency of the concrete is expressed in Vee-Bee degrees which are equal to the time in seconds under 3.1 above.
4.2	The required slump is obtained on the basis of the consistency scale given in table below.
4.2.1	The curve in Fig. 3 indicates the relationship between slump in cm and the degrees covered by the consistency scale given in table below:

Consistency	No. of Vee-Bee Degrees	Characteristics
Moist Earth	40 to 25 to 20	Particles of coarse aggregate in the concrete are adhesive but concrete does not clot. Risk of segregation.
Very Dry	20 to 15 to 10	Concrete has the consistency of very stiff porridge, forms a stiff mound when dumped, and barely tends to shake or roll itself to form an almost horizontal surface when conveyed for a long time, in say a wheel barrow.
Dry	10 to 7 to 5	Concrete has the consistency of stiff porridge forms a mound when dumped and shakes or rolls itself to form a horizontal surface when conveyed for a long time in, say, a wheel barrow.
Plastic	5 to 4 to 3	Concrete can be shaped into a ball between the palms of the hands and adheres to the skin.
Semi-fluid	3 to 2 to 1	Concrete cannot be rolled into a ball between the palms of the hands, but spreads out even though slowly, and without affecting the cohesion of the constituents so that segregation does not occur.
Fluid	More fluid than 1	Concrete spreads out rapidly and segregation takes place.

The following slumps are adopted for different works.

S. N.	Type of work	Slumps	
		When vibrators are used	When vibrators are not used
1	Mass concrete in foundations, footings, retaining walls and pavements.	10 mm to 25 mm	30 mm to 75mm
2	Thin flooring of less than 74 mm thickness.	25 mm to 40mm	75 mm to 10mm
3	Reinforced cement concrete work	See under Sub-section 8.2 RCC.	

8.1.11 Mixing of Concrete

Mixing of cement concrete shall, as a rule, be done in a mechanical mixer. However, the Engineer may permit hand mixing in specific cases where in his opinion it is not practicable to resort to mechanical mixing, either on account of the quantity of cement concrete required is small or for any other reason. In such cases he should ensure that the inferior quality of concrete produced by hand mixing will not adversely affect the structure.

8.1.11.1 Mechanical Mixing

Measured quantity of aggregate, sand and cement required for each batch shall be poured into the drum of the mechanical mixer while it is continuously running after about half a minute of dry mixing, measured quantity of water required for each batch of concrete mix shall be added gradually and mixing continued for another one and a half minute. It shall be ensured that total mixing time for each batch shall be at least two minutes. The mixed concrete from one drum shall then be discharged completely and the drum re-charged as before for the next batch mix. The mixed concrete shall be used within 30 minutes from the time of adding water. The mixer shall be cleaned thoroughly before suspending the work each time, revolving the drum with plenty of water.

8.1.11.2 Hand Mixing

A heap of convenient size shall be formed by packing the calculated quantity of aggregate sand and cement (in that order) in layers. The ingredients shall be mixed, dry thoroughly by turning them over and over again. The calculated quantity of water then shall be added gradually and the whole thing slowly and thoroughly mixed again.

8.1.12 Transport, placing and compaction

The method of transporting and placing concrete shall be approved by the Engineer. Concrete shall be so transported and placed that no contamination, segregation or loss of its constituent materials takes place.

All form work shall be cleaned and made free from standing water, snow or ice immediately before placing of concrete.

No concrete shall be placed in any part of the structure, until the approval of the Engineer has been obtained.

If concreting is not started within 24 hours of the approval being given, it shall have to be obtained again from the Engineer. Concreting then shall proceed continuously over the area between constructions joints. Fresh concrete shall not be placed against concrete which has been in position for more than 30 minutes unless a proper construction joints formed.

Concrete when deposited shall have a temperature of not less than 4.5^0 C and not more than 38^0 C. It shall be compacted in its final position within 30 minutes of its discharge from the mixer unless carried in properly designed agitators, operating continuously, when this time shall be within 2 hours of the addition of cement to the mix and within 30 minutes of its discharge from the agitator.

Except where otherwise agreed to by the Engineer, concrete shall be deposited in horizontal layers to a compacted depth of not more than 0.45 m when internal vibrators are used and not exceeding 0.30 m in all other cases.

Unless otherwise agreed by the Engineer concrete shall not be dropped into place from a height exceeding 2 m. When trucking or chutes are used they shall be kept clean and used in such a way as to avoid segregation.

When concrete is conveyed by chute, the plant shall be of such size and design as to ensure practically continuous flow. Slope of the chute shall be so adjusted that the concrete flows without the use of an excessive quantity of water and without any segregation of its ingredients. The delivery end of the chute shall be as close as possible to the point of deposit. The chute shall be thoroughly flushed with water before and after each working period and the water used for this purpose shall be discharged outside the form work.

When concreting has to be resumed on a surface which has hardened, it shall be roughened, swept clean, thoroughly wetted, and covered a 13 mm thick layer of mortar composed of cement and sand in the same ratio as in the concrete mix itself This 13 mm layer or mortar shall be freshly mixed and placed immediately before placing of new concrete.

Where concrete has not fully hardened, all laitance shall be removed by scrubbing the wet surface with wire of bristle brushes, care being taken to avoid dislodgement of any particles of coarse aggregate. The surface shall then be thoroughly wetted, all free water removed, and then coated with net cement grout. The first layer of concrete to be placed on this surface shall not exceed 150mm in thickness, and shall be well rammed against old work, particular attention being given to corners and close spots.

All concrete shall be compacted to produce a dense homogenous mass with the assistance of vibrators. Unless otherwise permitted by the Engineer for exceptional cases, such as concreting under water, where vibrator in serviceable condition shall be kept at site so that so that spare equipment is always available in the event of breakdowns.

Internal vibrators shall be capable of producing not less than 10,000 cycles/minute and external of form vibrators not less than 3,000 cycles/minute.

8.1.13 Mechanical Vibration

8.1.13.1 General

Use of mechanical vibrators for compacting concrete is recommended, provided that the reduced water content recommended under paragraph 8.1.10 above is adopted. The number and type vibrations shall be subject to the approval of the Executive Engineer. If nothing is specified, only, vibrations of the internal type of shall be used. Mechanical vibrator shall be adequately powdered and capable of transmitting vibrations of the required frequency to the concrete. A sufficient number of mechanical vibrators shall be provided on the batch so that each batch may be thoroughly compacted immediately after placing and that there will be no delay in placing and compacting of ensuing batches. The intensity and duration of vibration shall be sufficient to ensure complete settlement and compaction without any stratification of the successive layers or separation of ingredients. Preliminary experiment in vibrating shall be conducted under actual conditions of mixed and placement in order to determine the optimum duration and method of vibration.

Vibrations should be continued till the concrete is thoroughly compacted and the voids filled as indicated by the appearance of mortar or paste at the exposed surface or at faces of contact with the forms.

8.1.13.2 Type of Vibrators

Vibrators are of the following four general types:

a) Internal vibrators: Which consist of metal spud or rod which is inserted into newly placed concrete and which vibrates while it is being withdrawn.
b) External or 'form' vibrators: Which are attached to form work and external shuttering of walls, column etc. Forms transmit the vibrating action to the concrete.
c) Surface vibrators: Which are mounted on screeds or platforms and which are chiefly used for consolidating road slab, floors etc.
d) Vibration tables: Which are used for making precast products.

8.1.13.2.1 Internal Type Vibrators

Internal vibrators shall be allowed to penetrate as deeply as possible under their own weight and shall so consolidate the successive layers as to breakup effectively all strata or seam. The vibrators shall be inserted and withdrawn slowly in such a manner as not to leave voids in the plastic concrete. The entire operation shall be conducted in a systematic matter and each course or layer vibrated uniformly. The method of dumping or depositing the loads shall be so arranged as to keep the vibrators working continuously during placing operations. The course shall be kept approximately level, and the concrete, even when deposited in thin layers, shall be as stiff as can be satisfactorily worked. Care shall be taken not to disturb a set of partially set layer. The vibrations shall be held vertical as far as possible.

Under no condition shall internal vibrations strike the face of the forms, nor shall reinforcement steel or embedded metal be jarred with sufficient force to impair the bond between the concrete and the metal.

8.1.13.2.2 External or Form Vibrators

These are particularly effective on columns and in the citing of pre-cast units such as pipes, slabs, piles, etc. The machine should be fastened to a wale or gut and transmission of the vibration around perimeter of the member should be further assisted by means of encircling chain where this is practicable. Forms vibrators shall also be used on thin wall sections where reinforcement, ties and spreaders interfere too much with internal vibrators.

8.1.13.2.3 Surface Vibrators

While using surface vibrators, care shall be taken to ensure that the surface vibrator compacts the layer being placed to its full depth. If this requirement is not met, either the depth of the layer shall be reduced or a more powerful machine shall be used.

8.1.13.2.4 Vibrating Tables

Vibrating tables are used for precast units which are made in moulds fastened to the table. Tables are available in various sizes and are usual equipped with adjustable eccentrics so that both the speed and amplitude can be adjusted.

8.1.14 Concreting under water

When it is necessary to deposit concrete under water, the methods equipment, material and properties of the mix to be used shall be got approved from the Engineer before any work is started. Such concrete shall not be considered as 'Concrete.'

Concrete shall not be placed in water having a temperature below 4.5^0 C. The temperature of the concrete, when deposited, shall be not less than 16^0 C, nor more than 38^0 C. The material shall be so proportioned as to produce a concrete having a slump of not less than 10 mm and not more than 180 mm. The slump shall be tested as per IS: 516.

Coffer-dams or forms shall be sufficiently tight, to ensure still water conditions if practicable, and in any case to reduce the flow of water to less than 3 metres per minute through the space into which concrete is to be deposited. Coffer-dams or forms in still water shall be sufficiently tight to prevent loss of mortar through the joints in the walls. Pumping shall not be done while concrete is being placed, or until 24 hours thereafter.

Concrete shall be deposited continuously until it has been brought to the required height. While depositing the top surface shall always be kept as level as possible and formation of seams avoided. For depositing concrete anyone of the following methods may be used:

(a) Tremic - When concrete is to be deposited under water by means of a tremic, the top section of the tremic shall be a hopper large enough to hold full batch for the mix of the entire contents of the transporting bucket if any. The tremic pipe shall not be less than 200 mm in diameter, and shall be large enough to allow a free flow of concrete and strong enough to with stand the external pressure of the water in which it is suspended, even if a partial vacuum develops inside the pipe. Preferably, flanged steel pipe of adequate strength for the job shall be used. A separate lifting device shall be provided for each tremic pipe with its hopper at the upper end. Unless the lower end of

the pipe is equipped with an approved automatic check valve, the upper end of the pipe shall be plugged with a wadding of gunny sacking or other approved material before delivering the concrete to the tremic pipe through the hopper so that when the concrete is forced down from the hopper to the pipe it will force the plug (and along with it any water in the pipe) down the pipe and out of the bottom end, thus establishing a continuous stream of concrete. It will be necessary to raise slowly the tremic in order to allow a uniform flow of concrete, but it shall not be emptied so that water enters above the concrete in the pipe. At all the times after the placing of concrete is started and until all the required quantity has been placed, the lower end of the tremic pipe shall be kept below the top surface of the plastic concrete. This will cause the concrete to build up from below instead of flowing out over the surface, and thus avoid formation of layers of laitance. If the charge in the tremic is lost while depositing the tremic shall be raised above the concrete surface, and unless sealed by a check valve it shall be re-plugged at the top end, as at the beginning, before refilling for depositing further concrete.

(b) Drop/Bottom Bucket: The top of the bucket shall be closed. The bottom doors shall move freely downward and outward when tripped. The bucket shall be filled completely and lowered slowly to avoid backwash. It shall not be dumped until it rests on the surface upon which the concrete is to be deposited and when discharged shall be withdrawn slowly until well above the concrete.

To minimize the formation of laitance, great care shall be exercised not to disturb the concrete as far as possible while it is being deposited.

8.1.15 Working in extreme weather

Where concrete is to be deposited at or near freezing temperatures, precautions shall be taken to ensure that at the time of placing it has a temperature of not less than 4.5^0 C and that this temperature after it has been placed and compacted is maintained until it has thoroughly hardened. When necessary the ingredients shall be heated before mixing and concrete carefully protected after placing; in general, heating mixing water alone to about 60^0 C may be sufficient for this purpose. Dependence shall not be placed on salt or other chemicals for the prevention of freezing. Calcium chloride upto 1½% by weight of the cement can be used to accelerate the rate of hardening. Use of calcium chloride in excess of this percentage is considered harmful. No frozen material or materials containing ice shall be used. All concrete damaged by frost shall be removed. It is recommended that concrete exposed to freezing whether shall have entrained air and the water content of the mix shall not exceed 30 liters per 50 kg of cement.

When depositing concrete in very hot weather, precautions shall be taken to that the temperature of wet concrete does not exceed 38^0 C while placing. This shall be achieved by stacking aggregate under the shade and keeping them moist, using cold water, reducing the time between mixing and placing to the minimum, cooling formwork by sprinkling water, starting curing before concrete dries out and restricting concreting, as far as possible, to mornings and evenings.

8.1.16 Construction joints

Concreting shall be carried out continually upto the construction joints, the position and details of which shall be as shown on approved drawings or as directed by the Engineer. Such joints shall, however, be kept to the minimum.

For a critical construction joint, a stopping board shall be fixed previously at the pre-determined position and shall be properly stayed for sufficient lateral rigidity to prevent its displacement or plugging when concrete is compacted against it. Concreting shall be continued right up to the board. The board shall not be removed before the expiry of the specified period for removal of vertical forms.

Before resuming work at any construction joint when concrete has not yet fully hardened, all laitance shall be removed thoroughly, care being taken to avoid dislodgement of coarse aggregates.

When work has to be resumed on a surface which has hardened it shall be thoroughly hacked, swept clean, wetted and covered with a layer of neat cement grout. The neat cement grout shall be followed by a 13 mm thick layer of mortar mixed in the same proportion as in concrete and concreting resumed immediately thereafter. The first batch of concrete shall be rammed against the old work to avoid formation of any stone pockets, particular attention being paid to corners and close spots.

8.1.17 Use of Plums in Ordinary Concrete

Stone plums shall not be used unless specified on the drawings. When used the size of stone plums may be from 150 to 300 mm. The maximum dimension of these stones or plums shall not exceed 1/3rd the least dimension of the members.

All plums shall be hard, durable, clean and free from soft materials or loose pieces or deleterious substance in them and shall not have sharp corners.

During concreting the first layer of concrete of the specified mix shall be laid to a thickness of the maximum size of plums to be used. The plums shall then be laid while the top portion of this concrete is still green but sufficiently stiff to prevent compete submergence of the plums under their own weigh. These plums shall be about half embedded in the concrete and the remaining part exposed so as to form a key with the next layer of concrete. No plums shall be used for concrete laid under water.

While placing the plums, care shall be taken to see that the clear distance between any to plums is not less than either the width or thickness of either of the plums. The distance from plums to the outer surface or from any steel reinforcement shall be equal to greatest width of the plum.

If plums of stratified stone are used, they shall be laid on their natural bed. Stones with concave faces shall be laid with the concave upwards.

The thickness of the next and successive layers of concrete shall be at least twice that of the largest plums.

The total volume of plums shall not exceed 15 percent of the volume of the finished concrete.

8.1.18 Finishing

Immediately after the removal of forms, all exposed bars or bolts passing through the Reinforced Cement Concrete member and used for shuttering or any other purpose shall be cut inside the Reinforced Cement Concrete member to a depth of at least 25 mm below the surface of the concrete and the resulting holes be closed by cement mortar. All fins caused by form joints, all cavities produced by the removal of form ties and all other holes and depressions, honeycomb spots, broken edges or corners, and other defects, shall be thoroughly cleaned, saturated with water, and carefully pointed and rendered true with mortar of cement & fine aggregate mixed in the proportions used in the grade of concrete that is being finished and of as dry a consistency as is possible to use. Considerable pressure shall be applied in filling and pointing to ensure thorough filling in all voids. Surfaces which have been pointed shall be kept moist for a period of twenty four hours.

All construction and expansion joints in the completed work shall be left carefully tooled and free from any mortar and concrete. Expansion joint filler shall be left exposed for its full length clean and true edges.

If rock pockets/honey-combs, in the opinion of the Engineer are of such an extent or character as to affect the strength of the structure materially or to endanger the life of the steel reinforcement, he may declare the concrete defective and require the removal and replacement of the portions of the structure affected.

8.1.19 Curing of Concrete

8.1.19.1 Protection and water curing

Immediately after compaction, concrete shall be protected against harmful effects of weather, including rain, running water, shocks, vibration, traffic, rapid temperature changes, frost and drying out process. It shall be covered with wet sacking, hessian or other similar absorbent material approved by the Engineer soon after the initial set, and shall be kept continuously wet for a period of not less than 14 days from the date of placement. Masonry work over the foundation concrete may be started after 48 hours of it's laying but the curing of concrete shall be continued for a minimum period of 14 days.

8.1.19.2 Steam curing

Where steam curing is adopted it shall be ensured that it is done in a suitable enclosure to contain the live steam in order to minimize moisture and heat losses. The initial application of the stream shall be from two to four hours after the final placement of concrete to allow the initial set of the concrete to take place.

Where retarders are used, the waiting period before application of the steam shall be increased from four to six hours.

The steam shall be at 100 % relative humidity to prevent loss of moisture and to provide excess moisture for proper hydration of the cement .The application of steam shall not be

directly on the concrete, the ambient air temperature shall increase at a rate not exceeding 5^0 C per hour until a maximum temperature of 60^0 C-70^0 C is reached. The maximum temperature shall be maintained until the concrete has reached the desired strength.

When steam curing is discontinued the ambient air temperature shall not drop at a rate exceeding 5^0 C per hour until a temperature of about 10^0 C above the temperature of the air to which, the concrete, will be exposed, has been reached.

The concrete shall not be exposed to temperature below freezing for at least six days after casting.

Care shall be exercised to protect the concrete from all shakings, jarring and other disturbance during the period of curing.

8.1.20 Tests and Standard of Acceptance

8.1.20.1 Preliminary tests for Controlled Concrete

For controlled concrete preliminary test shall consist of three sets of separate tests, and in each set, tests shall be conducted on six specimens. Not more than one set of six specimens shall be made on any particular day. On the six specimens in each set, three shall be tested at seven days and the remaining three at 28 days. The preliminary tests at 7 days are intended only to indicate the strength likely to be attained at 28 days.

8.1.20.2 Works Strength Tests for Controlled and Ordinary Concrete

Works strength tests shall be made in accordance with IS: 516. Each test shall be conducted on ten specimens, five of which shall be tested at seven days and the remaining five at 28 days. The samples concrete shall be taken on each day of concreting and cubes shall be made at the rate of one for every 5 cubic metre of concrete or a part thereof. However, if concreting done in a day is less than 15 cubic metres, the minimum number of cubes can be reduced to 6 with the specific permission of the Engineer.

Similar works tests shall be carried out whenever the quality and grading of materials is changed irrespective of the quantity of concrete poured. The number of specimens may be suitably increased as deemed necessary by the Engineer, when procedure of tests given above reveals a poor quality of concrete and in other special cases.

All work shall be carried out under the supervision of a qualified and a competent Engineer who will supervise proportioning, placing and compacting of concrete at all stages.

All necessary labour, materials, equipment, etc., for sampling, preparing test cubes, curing etc. shall be provided by the Contractor. Testing of the materials and concrete may be arranged by the Engineer in an approved laboratory are the cost of the Contractor.

8.1.20.3 Standard of Acceptance

The average strength of the group of cubes cast for each day shall not be less than the specified works cube strength. 20 % of the cubes cast for each batch may have values less than the specified strength, provided the lowest value is not less than 85 % of the specified strength.

A register for work test of concrete must be maintained as record which is given as given in table below.

Register of Work Test of Concrete

Name of Work	Concrete Mix	Compressive Strength
Name of Contractor.	M 100	As given in the two tables under section 8.1.4 above.
Agreement No.	M 150	
Sample No.	M 200	
Identification mark.	M 250	
Portion of work and quantity represented sample.	M 300	
Date and time of casting cubes.	M 350	
Proportion of mix.	M 400	

7 days test	Cube No.		
	1	2	3
1. Due date of test.			
2. Actual date of test.			
3. Actual compressive strength. (a) Minimum (b) Maximum (c) Average			
4. Is average compressive strength, equal to or more than specified compressive strength?	Yes/No	Yes/No	Yes/No

7 days test	Cube No.		
	1	2	3
5. Is minimum compressive strength equal to or more than specified compressive strength?	Yes/No	Yes/No	Yes/No
6. 15% of average strength.			
7. Difference between 3 (a) & 3 (b).			
8. Is 7 less than 6?	Yes/No	Yes/No	Yes/No
9. If answer to (4 & 8) are yes, or answer to 5 is yes.	Acceptable	Acceptable	Acceptable
10. If answers to 4 and/ or 8 are/ is No, or answer to 5 and 8 are No.	Not acceptable	Not acceptable	Not acceptable
11. If answer to 9 is acceptable.	28 days test not required.		
12. If answer to 10 is not acceptable.	28 days test required.		
JE / AE/AEE	EE		
Note: Units for S. No. 3a, b, c, 6, 7 & 8 are kg per square cm.			

28 days test	Cube No.		
	4	5	6
1. Due date of test			
2. Actual date of test			
3. Delay in testing			
4. Increase in strength @ 1.50 kg/ cm^2, per day of delay.			
5. Anticipated compressive strength (Min. specified + 4)			
6. Actual compressive strength. (a) Minimum (b) Maximum (c) Average			
7. Is average compressive strength, equal to or more than specified / anticipated compressive strength?	Yes/ No	Yes/ No	Yes/ No
8. If answer to 7 is yes.	Accept at full rates.		
9. If answer to 7 is No.	See last table in this Sub-section under item 5.4 b & c.		
JE / AE/AEE	EE		
Note: Units for S. No. 5, 6 a, b, c are kg per square cm.			

For preliminary test, work test and additional test, reference may be made to the three tables as given below respectively.

Preliminary Test for Compression Strength of Concrete

1.	Scope
1.1	This method covers compression test on concrete made in a laboratory where accurate control of quantities of materials and test conditions is possible.
2.	Test Specimen
2.1	Test specimens shall be either cubes or cylinders whose size shall be as given in table below:

SIZES OF TEST SPECIMENS

Maximum size of coarse aggregates	Size Of Specimens (in cm)		
	Cubes	Cylinder	
	cm.	Dia.	ht
Not exceeding 20mm.	10x10x10	15	30
Greater than 20mm. hut not exceeding 38mm.	15x15x15	15	30
Greater than 38mm after wet screening or hand picking aggregates greater than 38mm.	15x15x15	15	30
The size of the cubic specimen shall be generally (15x15x15cm) and this size shall be preferred to (10x10x10cm). Where prior consent of the Engineer has been obtained, the size of the specimen may be (10x10x10cm).			

2.2	Moulds for test specimens shall be rigid and of metal, with inner surfaces accurately machined. Each mould shall be provided with a metal base having a smooth machined surface. Means shall be provided for securing the base plate to the mould.

3.	Materials
3.1	The materials and proportions used in making the test specimens including the water content shall be similar in all respects to those to be used in the works. The cement on arrival at the laboratory shall be mixed dry either by hand or in a suitable mixer so as to ensure uniformity, care being taken to avoid the intrusion of foreign matter, and then stored in airtight containers.
3.2	All material shall be brought to a temperature of 81º F ± 40º F (27º C ± 2º C) before beginning the tests. The aggregate shall be dry.
3.3	The quantities of cement, aggregate and water for each batch shall be determined by weight to an accuracy of 1 in 1000.
4.	Preparation of Test Specimen
4.1	The concrete shall be mixed by hand, or in a small batch mixer in such a manner as to avoid loss of water. If the concrete is mixed by hand, the cement and fine aggregate shall be first mixed dry until the mixture is uniform in colour. The coarse aggregate shall then be added and mixed with the cement and fine aggregate. Water shall be then be added and the whole mixed thoroughly until the resulting concrete is uniform in colour, and in no case for less than two minutes. If a batch mixer is used, all materials may be placed together in the mixer and mixed thoroughly until the resulting concrete is uniform in colour, and in no case for less than two minutes.
4.2	The interior surface of the mould and base plate shall be lightly oiled before the concrete is placed in the mould. Test specimens shall be moulded by placing the fresh concrete in the mould in three layers, each approximately one third the volume of the mould. In placing each scoopful of concrete, the scoop shall be moved round the top edge of the mould as the concrete slides from it in order to ensure symmetrical distribution of concrete within the mould. Each layer shall be rodded 25 times with 16 mm rod, 0.6 m in length, bullet point at the lower end. The strokes shall be distributed in a uniform manner over the cross section of the mould and shall penetrate into the under laying layer. The bottom layer shall be rodded throughout its depth. After the top layer has been rodded, the surface of the concrete shall be struck off with a trowel and covered with a glass plate at least 6 mm thick, or with a machined metal plate, which may be later used in capping the test specimen. The whole process of moulding shall be carried out in such a manner as to preclude the alternation of the water cement ratio of the concrete by the loss of water either by leakage from the bottom or overflowing from the top of the mould.
4.2.1	Where it is proposed to use mechanical vibrators for compacting the concrete at the site of work and to allow increased stresses the test specimens may be compacted with a mechanical vibrator.
4.3	Capping of Cylindrical Test Specimen
4.3.1	Two to four hours after moulding the cylindrical test specimen, if made in metal moulds, may be capped with a thin cap of neat cement paste. The cap shall be formed by means of a piece of plate glass 6 mm thick, or a machined metal plate 13 mm thick and of a size 50 to 75 mm larger than that of mould. The plate shall be worked on the cement paste until the plate rests on top of the mould. The cement for capping shall be mixed to a stiff paste from about 2 to 4 hours before it is to be used in order to avoid the tendency of the cap to shrink. Adhesion of the concrete to the top and bottom plates may be avoided by coating them with heavy oil or grease.
4.3.2	If cylindrical specimens are not capped with neat cement paste, they shall be capped before testing in such a manner that the ends are perfectly plane and at right angles to the axis of the cylinder. The material used for capping and the thickness of the cap shall be such that the capping will now flow or fracture under the load.
4.3.3	It is desirable that the capping material should have a value for modulus of elasticity equal to or greater than that of the concrete under test.
5.	Curing and storage of test specimen
5.1	Immediately the moulding is completed the moulds, containing the test specimens shall be placed in moist air of at least 90 percent relative humidity and at a temperature of $81^0 \pm 4^0$ F ($27^0 \pm 2^0$ C) for 24+½ hour.

	After 24 hours, the test specimens shall be removed from the moulds, marked and placed in saturated lime solution at a temperature of $81^0 \pm 4^0$ F ($27^0 \pm 2^0$ C) until required for rest.
6.	Method of testing
6.1	The tests shall be made at the age of concrete corresponding to that for which the strengths are specified.
6.2	Compression tests shall be made immediately upon removal of the concrete test specimen from the curing room i.e., the test specimens shall be loaded in damp condition. The dimensions of the test specimens shall be measured in millimeters accurate to 0.5 mm.
6.3	The metal bearing plates of the testing machine shall be placed in contact with the each of the testing specimens. Cushioning materials shall not be used. In the case of cubes, the test specimens shall be placed in the machine in such a manner that the load is applied to the sides of the specimens as cast. An adjustable bearing block shall be used to transmit the load to the test specimen. The size of the bearing block shall be the same or slightly larger than that of the test specimen. The upper or lower section of the bearing block shall be kept in motion as the head of the testing machine is brought to a bearing on the test specimen.
6.3.1	The load shall be applied axially without shock at the rate of approximately 140 kg/sq.cm. per minute. The total indicated by the testing machine at failure of the test specimen shall be recorded and the unit compressive strength calculated in kg/sq. cm. using the area computed from the measured dimensions of the test specimen. The type of failure and appearance of the concrete shall be noted.
7.	Standard of Acceptance
	This shall be as per Clause 8.1.20.3 above.

Works Test for Compression of Concrete

1.	Scope
1.1	This method is intended to apply to the moulding, storing and testing of compression test specimen of concrete samples from concrete being used in construction.
2.	Specimen
2.1	Test specimens shall either be cubes or cylinders whose sizes shall be as given in following table below:

SIZES OF TEST SPECIMENS

Maximum size of coarse aggregates	SIZE OF SPECIMENS		
	Cubes	Cylinders	
	cm.	Dia. cm.	ht cm.
Not exceeding 20 mm.	10x10x10	15	30
Greater than 20 mm but not exceeding 40mm.	15x15x15	15	30

2.2	The moulds for test specimen shall be made of non-absorbent material and shall be substantial enough to hold their form during the moulding of the test specimens. They shall not vary from standard dimensions given under 2.1 above by more than one percent. The moulds shall be so constructed that there will be no leakage of water from the test specimen during mouldings. Note: Satisfactory moulds can be made from machined iron or steel castings, machined steel wire pipe, cold drawn steel tubing, rolled metal plate or galvanized iron.
2.2.1	Each mould shall be provided with a base plate having a plane surface and made of non-absorbent material. This plate shall be large enough in diameter to support the moulds property without leakage. Glass plate shall not be less than 6.5 mm thick or planed metal not less than 12 mm thick shall be used for this purpose. A similar plate shall be provided for covering the top surface of test specimen when moulded.
3.	Sampling of concrete
3.1	Samples for concrete for test specimen shall be taken at the mixer or in the case of ready mixed concrete from the transportation vehicle during discharge. The sample of concrete from which test specimens are made shall be representative of the entire batch. Such samples shall be obtained by repeatedly passing a scoop or pail through the discharging stream of concrete, stacking the sampling operation until the entire batch is discharged. The sample thus obtained shall be transported to

	the place of moulding of specimen and to counteract segregation the concrete shall be mixed with a shovel until it is uniform in appearance. The location in the work of the batch of concrete, thus samples shall be noted for further reference. In the case of paving concrete, samples may be taken from the batch immediately after deposition on the subgrade. At least five samples shall be taken from different positions of the pile and these samples shall be thoroughly mixed before being used to form the test specimen.
4.	Preparation of test specimens
4.1	The interior surface of the mould and base plate shall be lightly oiled before the concrete is placed in the mould. From the samples of concrete obtained as described under 3.1 above, the test specimen shall be immediately moulded by one of the following method:
(a)	When the job concrete is compacted by ordinary methods, the 1st specimen shall be moulded by placing the test concrete in the mould in these layers each approximately one-third of the volume of the mould in placing each scoopful of concrete, the scoop shall be moved around the top edge of the mould as the concrete there slides from it, in order to ensure a uniform distribution of concrete within the mould. Each layer shall be rodded 25 times with a 16 mm rod 60 cm in length, bullet point at lower end. The strokes shall be distributed in a uniform manner over the cross section of the mould and shall penetrate into the under lying layer. The bottom layer shall be rodded throughout its depth. After the top layer has been rodded, the surface of the concrete shall be struck off with a trowel and covered with a glass plate at least 6.5 mm thick or a machined metal plate which may later be used in capping the cylindrical test specimens. The whole process of moulding shall be carried out in such a manner as to preclude the alternation of the water-cement ratio of the concrete by loss of water either by leakage from the bottom or over flow from the mould.
(b)	When the job concrete is placed by vibration and the consistency of the concrete is such that the 1st specimen cannot be properly moulded by hand rodding as directed under (a) above, the specimens shall be vibrated to give a compaction corresponding to that of the job concrete. The fresh concrete shall be placed in the mould in two layers, each approximately half the volume of the mould. In placing each scoopful of concrete, the scoop shall be moved around the top edge of the mould as the concrete there slides from it, in order to ensure a symmetrical distribution of concrete within the mould. Either internal or external vibrators may be used. The vibration of each layer not be continued longer than is necessary to secure the required density. Internal vibrators shall be of appropriate size and shall penetrate only the layer to be compacted. In compacting the first layer, the vibrators shall not be allowed to rest on the bottom of the mould. In placing the concrete for the top layer, the mould shall be filled to the extent that there will be mortar loss during vibration. After vibrating the second layer enough concrete shall be added to bring the level above the top of the mould. The surface of the concrete shall then be struck off which a trowel and covered with a glass or steel place as specified under (a) above. The whole process of moulding shall be carried out, in such a manner as to preclude the alternation of the water-cement ratio of the concrete by loss of water either by leakage from the bottom or overflow from the top of the mould.
4.2	Capping of Cylindrical Test Specimen
4.2.1	Two to four hours after moulding, the cylindrical test specimens, if made in metal moulds, may be capped with a thin cap of neat cement paste. The cap shall be formed by means of a piece of plate glass 6.5 mm thick, or a machined metal plate 12 mm thick and of a size 50 to 75 mm larger than that of mould the plate shall be worked on the cement paste until the plate rests on top of the mould. The cement for capping shall be mixed to a stiff paste 2 to 4 hours before it is to be used in order to avoid the tendency of the cap to shrink. Adhesion of the concrete to the top and bottom plates may be avoided by coating them with heavy oil or grease.
4.2.2	If the cylindrical specimens are not capped with neat cement paste, they shall be capped before testing in such a manner that the ends are perfectly plane, and at right angles to the axis of the cylinder. The material used for capping and the thickness of the cap shall be such that it will not flow or fracture under the load.
4.2.3	It is desirable that the capping material should have a value for modulus of elasticity equal to or greater than, that of the concrete under test.

5.	Curing and Storage of Test Specimens
5.1	In order to afford reasonably uniform temperature and moist conditions during the first 24 hours for curing specimens and to protect them from damage, the moulds shall be covered with wet straw or gunny packing and placed in a storage box so constructed and kept in such a position on work that its air temperature when containing concrete specimens, shall remain between 22^0 C - 33^0 C. Other suitable means which provide such temperature and moisture conditions may be used. Note: It is suggested that the storage box be made of 25 mm dressed tongued and grooved timber, well braced with battens to avoid warping. The box should be well painted inside and outside, and should be provided with a hinged cover and padlock. The test specimens shall be removed from the moulds at the end of 24 hours and stored in a moist condition at a temperature within the range of 24^0 C-30^0 C until the time of test. If storage in water is desired, a saturated lime solution shall be used.
6.	Method Testing
6.1	The specimens shall be tested in accordance with procedure described under:
6.1.1	Method of Testing
6.1.1	The tests shall be made at the age of the concrete corresponding to that for which the strengths are specified.
6.1.1	Compression tests shall be made immediately upon removal of the concrete test specimens from the curing room i.e. the test specimens shall be loaded in damp condition. The dimensions of the test specimens shall be measured in millimeters accurate to 0.5 mm.
6.1.1	The metal bearing plates of the testing machine shall be placed in contact with the ends of the specimens. Cushioning materials shall not be used. In the case of cubes the test specimens shall be placed in the machine in such a manner that the loads applied to the sides of the specimen as cast. An adjustable bearing block shall be used to transmit the load to the test specimen. The size of the bearing block shall be same or slightly larger than that of the test specimen. The upper or lower section of the bearing block shall be kept in motion as the head of the testing machine is brought to a bearing on the test specimen.
6.1.1	The load shall be applied axially without shock at the rate of approximately 140 kg/sq.cm. per minute. The total load indicated by the testing machine at failure of the test specimen shall be recorded and the unit compressive strength calculated in kg per sq.cm., using the area computed from the measured dimensions of the test specimen. The type of failure and appearance of the concrete shall be noted.
7.	Standard of Acceptance
	This shall be as per Clause 8.1.20.3 above.

Additional Tests for Concrete

In case the concrete fails when tested as per the method prescribed in preceding table above, one or more of the following check tests may be carried out at the discretion of Engineer to satisfy the strength of the concrete laid. All testing expenditure shall be borne by the Contractor. The number of additional tests to be carried out shall be determined by the Engineer. He shall be the final authority for interpreting the results of the additional tests and shall decide upon the acceptance or otherwise. His decision in this regard shall be final and binding. For purpose of payment the cube results only shall be the criteria. Some of the test outlined below:	
1.	Curing Cores: This method involves drilling and testing cores from the concrete for determination of compressing strength. In suitable circumstances the compressive strength of the concrete in the structure may be assessed by drilling cores from the concrete and testing. The procedure used shall comply with the requirements of IS: 1199-1959 and IS: 516-1959. The points from which cores shall be taken shall be representative of the whole concrete and at least three cores shall be obtained and tested. If the average of the strength of all the cores cut from the structure is less than the specified strength, the concrete represented by the cores shall liable to rejection and shall be rejected if a static load test (C-5) either cannot be carried out or is not permitted by the Engineer.
2.	Ultrasonic Test: If an ultrasonic apparatus is regularly used by trained personal, and continuously maintained individual charts are kept showing a large number of readings; the relation between the reading and strength of cubes made from the

	same batch of concrete, such charts may be used to obtain approximate indications of the strength of concrete in the structures. In cases of suspected lack of compaction or low cube strength, the results obtained from the ultrasonic test results on adjacent acceptable sections of the structures may be used for the purpose of assessing the strength of concrete in the suspected portion.
3.	Rebound Hammer Test: If a rebound hammer is regularly used personal and continuously maintained individual charts are kept showing a large number of readings, the relation between the reading and strength of concrete cubes made from the same batch of concrete, such charts may be used in conjunction with hammer reading to obtain an approximate indication of the strength of concrete in a structure or element. If calibration charts are available from manufacturers it can be used. When making rebound hammer tests each result should be the average of at least six readings. Readings should not be taken within 25 mm of the edge of concrete members and it may be necessary to distinguished between reading taken on a troweled face and those on a moulded face. When making the tests on precast units, special case should be taken to bed them firmly against the impact of the hammer.
4.	Load Test on Individual Precast Units: The load tests described in this clause are intended as check on the quality of the units and should not be used as a substitute for normal design procedures. Where members require special testing such special testing procedures shall be in accordance with the specification. The test loads shall be applied and removed incrementally.
4.1	Non-Destructive tests: The unit shall be supported at its designed points of support and loaded for five minutes with a load equal to the sum of the characteristic dead load plus one and a quarter time the characteristic imposed load. The deflection is then recorded. The maximum deflection measured after application of the load shall be in accordance with the requirements defined by the Engineer. The recovery is measured five minutes after the removal of the load then re-imposed. The percentages recovery after the second loading shall be not less than that after the first loading nor less than 90 percent of the deflection recorded during the second loading. At no time during the tests, shall the unit show any sign of weakness or faulty construction as defined by the Engineer in the light of a reasonable interpretation of relevant data.
4.2	Destructive tests: The units loaded while supported at its design point of support and must not fail at its design load for collapse, within 15 minutes of the time when the test load becomes operative. A deflection exceeding 1/40 of the test span is regarded as failure of the unit.
4.3	Special tests: For very large units or units not reading amenable to the above tests e.g. columns, the precast parts of composite beams and members designed for continuity or fixity, the testing arrangement shall be agreed upon before such units are cast.
5.	Load test of structures or parts of structures
	The test described in this clause are intended as a check on structures, where there is doubt regarding structural strength. Test loads are to be applied and removed incrementally.
5.1	Age of tests: The test is to be carried out as soon as possible after the expiry of 21 days from the time of placing of the concrete when the test is for a reason other than the quality of the concrete in the structure being in doubt, the test may be carried out earlier provided that the concrete has already reached its specified characteristic strength.
5.2	Test load: The test loads to be applied, for the limit states of deflection and local damage, are the appropriate design loads, i.e. the characteristic dead and superimposed loads. When the limit state of collapse is being considered the test load shall be equal to the sum of the characteristic dead load plus one and a quarter times the characteristic imposed load and shall be maintained for a period of 24 hours. If any of the final dead loads is not in position on the structure, compensating loads shall be added as necessary. During the tests temporary supports of sufficient strength to take the whole load shall be placed in position underneath but not in contact with the member being tested. Sufficient precautions must be taken to safeguard persons in the vicinity of the structure.
5.3	Measurements during the test: Measurements of deflection and crack width shall be taken immediately after the application of the load and, in the case of 24 h sustained

	load test, at the end of 24 h loaded period, after removal of the load and after the 24 h recovery period. Sufficient measurement shall be taken to enable side effects to be taken into account. Temperature & weather conditions shall be recorded during tests
5.4	Assessment of results: In assessing the strength of a structure, or a part of structure following a loading test, the possible effects of variation in temperature and humidity during the period of the test shall be considered.
	The following requirements shall be met: a) The maximum width of any crack measured immediately on application of the test load for local damage, is to be not more than 2/3 of the value of the appropriate limit state requirement. b) For members spanning between two supports, the deflection measured immediately on application of the test load for deflection is to be not more than 1/500 of the effective span. Limits shall be agreed upon before testing cantilevered portions of structures. c) If the maximum deflection in mm shown during a 24 h under load is less than 40 L2/D where L is effective span in m and D is the overall depth of construction in mm, it is not necessary for the recovery to be measured and the requirement (d) does not apply, and d) If within 24 hours of the removal of the test load for collapse as calculated in clauses (a) a reinforced concrete structure does not show a recovery of at least 75 % of the maximum deflection shown during the 24 h under load, the loading should be repeated. The structure should be considered to have failed to pass the rest if the recovery after the second loading is not at least 75 % of the maximum deflection shown during the second loading.

8.1.21 Measurements

The cement concrete shall be measured in cum. The slab shall be measured as running continuously through and the beam as a portion below the slab. The measurement shall be done separately as follows:

1) Foundations and plinths.
2) Walls including attached pilasters, buttresses, and their caps and bases and string courses etc.
3) Suspended beams, columns and pillars.
4) Kerbs, steps and the like.
5) String courses, copings, bed plates, anchor blocks, plain window sills and the like.
6) Small arched lintels not exceeding 1.5 m clear span over sailing copings and the like requiring form work to suspended portions.
7) Mouldings as in cornices window sills etc. exceeding 15 cm. in girth.
8) Mouldings as in cornices window sills etc. not exceeding 15 cm in girth.

No deductions shall be made for the following:

Small voids such as the shaded portions in Fig. 4 when each do not exceed 40 sqcm. in section.

The work under following categories shall be measured separately:

i) From foundations to plinth level.

ii) From plinth level to floor two level;

iii) Form floor two level to floor three level and so on; and

iv) Concrete work in the parapet shall be measured together with the corresponding work in the wall of the storey next below.

The measurements shall be taken as given below:

The consolidated cubical contents of cement concrete shall be measured in cubic metres nearer to two places of decimal. Concrete laid in excess of sections shown in the drawing or as determined by the Engineer shall not be measured.

All measurements shall be taken to the nearest centimetre, except that thickness of slabs, partitions in case of posts, columns, beams and the like shall be taken to the nearest half centimetre.

No deductions shall be made for:

i) Ends of dis-similar materials (e.g. joists beams, posts girders. rafters, purlins, trusses, corbels and steps etc.) upto 500 sq.cm. in section; and
ii) Opening upto 0.1 sqm.

8.1.22 Rate

The rate is inclusive of the cost of labour and materials involved in all the operations described under various paras pertaining to this item. Contractor's profit @ 10% and over-head charges @ 5% has separately been added in the rates. In case water borne aggregates are used instead of crushed stone aggregates, the rates may be reduced as mentioned in the schedule.

Extra for additional lift over rates upto floor level two for all concrete work above floor level two, the rates as mentioned in the schedule of rates may be taken into consideration.

The rate for laying cement concrete:

a) in or under water excluding cost of pumping or bailing out water but including removing slush and;

b) in or under liquid mud including cost of removing slush etc. complete and;

c) in or under foul conditions,

shall be paid extra as mentioned in the latest applicable HPPWD Schedule of Rates.

8.2 Reinforced Cement Concrete

8.2.1 General

Reinforced cement concrete work may be cast-in-situ or precast as may be directed by the Engineer according to the nature of work. Reinforced cement concrete work shall comprise of the following, which may be paid separately or collectively as per description of the item of work.

(a) Form work.
(b) Reinforcement.
(c) Concreting.

8.2.2 Materials

8.2.2.1 Cement

The cement used for R.C.C. work shall comply with specification given in section 8.1.2.1 above.

8.2.2.2 Coarse Aggregates

The coarse aggregates used for R.C.C. work shall comply with specification given in section 8.1.2.2.1 above.

8.2.2.3 Fine Aggregates

Fine aggregates used for R.CC work shall comply with specification given in section 8.1.2.2.2 above.

8.2.2.4 Water

Water used for R.C.C. work shall comply with specification given in section 8.1.2.3 above.

8.2.2.5 Cement Mortar

The cement mortar used for R.C.C. work shall comply with specifications as mentioned below, while the materials used in cement mortar shall be as per specifications under above sections 8.1.2.1, 8.1.2.2.1 and/or 8.1.2.2.2, and 8.1.2.3.

8.2.2.5.1 Mixing

The mixing of mortars shall be done in mechanical mixer. The Engineer, may, however, relax the condition at his discretion, taking into account the nature, magnitude and location of the work, practicability of the use of these machines etc. or where items involving small quantities are to be done or if, in his opinion, the use of these mixers is not otherwise feasible. In cases, where mixers are not to be used, the Contractor shall take prior permission of the Engineer in writing before the commencement of work.

8.2.2.5.1.1 Mixing in Mechanical Mixer

Cement and sand in the specified proportions shall be fed into the mixer and mixed dry thoroughly, in the mixer. Water shall then be added gradually and the wet mixing continued for at least 3 minutes after the addition of water. Care shall be taken, not to add more water than that which shall bring the mortar to the consistency of a stiff paste. Only that quantity of mortar, which can be used within 30 minutes of its mixing, shall be prepared at any time. When mixing is stopped, the stages of the machine shall be cleaned each time.

8.2.2.5.1.2 Hand Mixing

The requisite and measured quantity of sand shall be leveled on clean watertight masonry platform and cement bags emptied on top. The cement and sand shall be thoroughly mixed dry to a homogenous mixture of uniform colour by being turned over and over, backwards and forwards several times.

8.2.2.5.2 Re-tempering of Mortar

In case of mortar using cement, the mortar that has stiffened because of evaporation of water from the mortar, may be re-tempered by adding water as frequently as needed to restart the requirements of consistency but this re-tempering shall be permitted only upto two hours from the time of addition of cement. Mortar unused for more than 2 hours shall be rejected and removed from the site of work.

8.2.2.5.3 Freshness

As a rule, mortar shall be used on the day it is made. After the close of each day's work, mixing trough pans shall be thoroughly washed and cleaned. Mortars shall not be allowed to dry and shall be kept damp with wet sacks or by any other suitable means.

The quantity of dry mix, which can be used within 30 minutes, shall then be mixed in water-tight masonry troughs with just sufficient quantity of water to bring the mortar to the consistency of a stiff paste by hoeing back and forth for about 10 minutes after the addition of water.

8.2.2.5.4 Measurements

Mortars shall be measured in cubic metres.

8.2.2.5.5 Rate

The rate for mortar shall be inclusive of the cost of the materials and labour involved in all the operations. Carriage of one kilometer by mechanical transport and 100 mtrs by head load has been taken into consideration.

The rates are exclusive of contractor's profit and overheads but include octroi, royalty etc. Water charges have not been allowed on the cost of the mortar under basic rates but this has been allowed in the analysis of complete item in which these mortars are used.

In addition to this, labour for measuring, carrying, depositing and mixing has been included in the rate.

8.2.2.6 Bitumen

Bitumen and bitumen products used for R.C.C. work shall comply with specifications given below.

8.2.2.6.1 General

According to IS: 334, Bitumen is defined as a Non- Crystalline Solid or Viscous material having adhesive properties, derived from Petroleum either by natural or refinery process substantially soluble in Carbon Di-sulphide. Bitumen are Black or Brown in colour. They may occur naturally but are usually made as end products from distillation of or as extract from Selected Petroleum Oils.

Bitumen obtained from distillation of crude petroleum is known as "straight-run" bitumen, When straight-run bitumen is further treated by blowing air through it, it attains a rubbery consistency and is known as "blown" bitumen. When straight-run bitumen is blended with a volatile or party volatile solvent, it is known as "Cut-back" bitumen. The straight-run bitumen emulsified with water is called "bitumen-emulsion.''

8.2.2.6.2 Types and Specifications

Some relevant bitumen types and specifications are given below. For any details of other bitumen work related materials and specifications the provisions in Chapter 2 of HPPWD Specifications (Vol. I), 1990 shall be followed.

8.2.2.6.2.1 Bitumen Pre-moulded Joint Filler

It shall conform to IS: 1838-1983 (Part 1) & IS: 1838-1984 (Part 2) and in which the details regarding performed fillers for expansion joints in concrete non-extruding and resilient type (Bitumen-Impregnated-fibre) has been given. It specifies requirement and tests for material, manufacturing, recovered, compression, extrusion, weathering, penetration and recovered bitumen, dimension and Bitumen content. The thickness shall be 12 mm, 18 mm or 25 mm as specified and shall be of maximum available standard length. During the casting of the slab, Pre-Moulded joint filler shall be placed adequately in position against the finished end of concrete slab. The filler shall remain 20 mm below the top surface of the pavement and shall expand up to the sub-grade.

Fibre used may be of soft board, fibre board or other suitable fibre (natural or artificial) of cellular nature and shall be securely bonded together and uniformly impregnated bitumen.

Pre-formed strips of expansion joint filled shall not be deformed by twisting, bending or other handling when exposed to atmospheric conditions. The prices of the joint filler that have been damaged shall not be paid.

It is used for expansion joints in concrete rods, run-ways, bridges and other structures. The tolerance is of ± 1.5 mm in thickness, ± 3 mm in depth and ± 5 mm in length shall be permitted.

8.2.2.6.2.2 Bitumen Solution Primer

It shall conform to IS: 3384-1986. This pertains to bitumen primer for use in water proofing and damp proofing. It prescribes requirements for viscosity, distillation, friction of test and residue. It also gives manufacturing and sampling. The primer shall be heated to the temperature as recommended by the manufacturers except in the case of emulsion, be applied uniformly to the base at the rate of 5 to 7.5 kg/10 sqm for bitumen treated surface and 7.5 to 10 kg/10 sqm for untreated water bound macadam surface.

Bitumen primer shall be applied just ahead of spreading of pre-mixed macadam.

8.2.2.6.2.3 Bitumen Hot Sealing Compound

It shall conform to IS: 1834-1984, which is the specification for Hot Applied Sealing Compound for joints in concrete.

IS: 1834-1984 specifies Hot Applied Sealing Compound intended for use in Sealing Joints in concrete roads, runways, bridges and other structures. The material covered by this standard is suitable only for longitudinal joints and transverse joints not more than 10 metres apart.

Joint sealing compounds, composed of suitable mixtures of materials, shall form a resilient and adhesive barrier in concrete joints and shall be capable of resisting the infiltration of water and the ingress of solid particles. They shall not be unduly affected by temperature variation, and shall resist any tendency to flow out of the joint or be picked up by vehicle tyres under hot weather conditions. They shall not become brittle or suffer loss of resiliency during cold weather conditions.

On heating in suitably designed kettles they shall be capable of acquiring a pouring consistency enabling them to be run molten in a uniform manner into all types of horizontal joints without difficulty.

Suitable primers may be first applied to the vertical faces of the concrete joint before the pouring of sealing compounds order to improve the adhesive qualities of the latter.

After the curing work is over, the joint portion of the filled board shall be cleaned thoroughly as directed by the Engineer. The joint shall be field with Hot Applied Sealing Compound. Grade (type) A (normal) for concrete construction other than those which are subjected to spillage of Kerosene or other heavy petroleum oils and Grade (type) B (Jet-Fuel resistant for concrete construction of Runways for Jet Aircrafts.

The physical requirements of sealing compound shall conform to the requirements given in the table below.

Physical requirements of Sealing Compounds of Grade A and B

S. N.	Characteristic	Require-ment	Method of Test
1	**2**	**3**	**4**
i)	Pour point (Max.)	180^0 C	Appendix A of IS: 1834-1984
ii)	Softening point (Min.)	75^0 C	*IS: 1205-1978
iii)	Increase in softening point after heating to 20^0 C above pour point for 3 hours (Max.)	5^0 C	
iv)	Flow test, percentage (Max.)	5	Appendix B of IS: 1834-1984
v)	Extensibility (Min.)	6 mm	Appendix C of IS: 1834-1984
vi)	Fuller settlement, difference from mean percent (Max.)	10	Appendix D of IS: 1834-1984
vii)	Resistance to grit penetration on impact test at 35^0 C, in tenths of a mm (Max. for Grade A only)	20 or less	Appendix E of IS: 1834-1984
viii)	Flash point (Min.)	200^0 C	*IS: 1209-1978
ix)	Penetration at 25^0 C 100g, 5s, 1/100	15 Min.	*IS: 1203-1978

S. N.	Characteristic	Require-ment	Method of Test
1	2	3	4
		50 Max.	
x)	Jet fuel resistance		
	a) Increase in penetration as measured in (ix) after 7 days immersion in #Jet Fuel (max. for Grade B only)	15	Appendix F of IS: 1834-1984 and *IS: 1203-1978
	b) Change in weight, after 7 days immersion in Jet Fuel, percent (Max.)	1	Appendix G of IS: 1834-1984

* See IS: 1201 to IS: 1220, Methods for Testing Tar and Bitumen.

It shall conform to IS: 1588-1967, Specification for Aviation Turbines Fuels, wide cut gasoline Type.

8.2.2.6.3 Handling

As damage is likely to occur during the unloading of bitumen or tar drums from railway wagons and from lorries in case of transit by road from the rail-head, great care shall be exercised in the handling of drums during these operations. As far as possible, unloading of drums shall be done with the help of wooden skids on which they can be rolled from the wagons or lorries on to the ground safely. In case skids are not used, the drums may be unloaded on a mattress of straw packed in gunny bags. Under no circumstances shall drums be thrown overboard without either of these contrivances as they are very likely to get damaged by impact with the hard ground or hard surface.

8.2.2.6.4 Storage

Each consignment shall be kept separate until material has been accepted. Drums containing different grade shall be kept in separate lots and never intermingled and shall be stored in such a manner as to permit easy access for proper inspection and identification of each consignment, and in a suitable place that will not damage the containers whereby leakage of bitumen or intrusion of water and other foreign matter, may be caused.

The presence of pockets of water in bitumen or tar gives rise to frothing during heating.

Bitumen or tar drums shall not be stored in a low-lying area wherein rain-water is likely to collect around the drums and leak into the drums creating pockets of water inside the bitumen.

8.2.2.6.5 Measurements

The materials shall be recorded as per standard weights of different type of container as intimated by manufacturers. The material shall be weighed where containers are found leaking.

8.2.2.7 Steel

The steel shall be clean and free from loose rust and loose mill scale at the time of fixing in position and subsequent concreting.

Reinforcement shall not be bent or straightened in a manner likely to injure the material or reduce the section. Bars, with kinks or bends not shown on the drawings shall not be used. The reinforcement shall be bent cold. For bats of 40 mm dia. and above, the bending may be permitted by heating bars to a cherry red stage (temperature not exceeding 845^0 C or 1550^0 F, but it is imperative that hot bar should be allowed to cool slowly, quenching or immersion in water otherwise being prohibited.

The steel uses for R.C.C. work shall conform to specifications given below.

8.2.2.7.1 General

8.2.2.7.1.1 The following types of steel for reinforcement shall be used in reinforced concrete/pre-stressed concrete construction and these shall conform to Indian Standard as revised from time to time as mentioned against each.

S. N.	Types of Steel Product	Indian Standard
a)	For ordinary reinforced concrete work.	
1.	Mild steel and medium tensile steel bard and hard drawn steel wire for concrete reinforcement.	IS: 432-1982
2.	Deformed bars of concrete reinforcement, hot rolled mild steel and medium tensile steel.	IS: 1139-1966
3.	Cold twisted steel bars for concrete reinforcement.	IS: 1786-2008
4.	Hard drawn steel wire fabric.	IS: 1566-1982
b)	For Pre-stressed concrete work.	

S. N.	Types of Steel Product	Indian Standard
5.	High tensile steel bar for pre-stressed concrete.	IS: 2090-1983
6.	Plain hard drawn steel wire for pre- stressed concrete. Part 1: Cold drawn stress relieved Part 2: As drawn wire.	 IS: 1785-1983 IS: 1785-1983
7.	Indented wire for pre-stressed concrete.	IS: 6003-1983
8.	Uncoated stress relieved strand for Pre-stressed concrete.	IS: 6006-1983

For all ordinary RCC works to be executed in all the above projects, Fe 500 grade of steel as per IS 1786-2008 (with latest amendments) shall be used (TATA/JSW/JSPL/SAIL or equivalent).

8.2.2.7.1.2 The composition of steel shall conform to IS: 226-1975.

8.2.2.7.1.3 Steel shall be supplied by the department, where so stipulated in the Contract. But where Contractor has to arrange these steel products he shall produce to the Engineer a copy of the manufacturer's test certificate, indicating the Indian Standard to which the particulars steel conforms and the grade if any before it is incorporated in the work.

8.2.2.7.1.4 Standard Size

The standard nominal size specified in IS: 432-1982 for mild and medium tensile steel bars shall be as follows:

Diameter of round bars or side of square bars – 5, 6, 8, 10, 12, 15, 20, 22, 25, 28, 32, 36, 40, 45 and 50 mm.

There is no objection to the use of bars of other sizes provided they comply with the physical, chemical and other requirements laid down in IS: 432-1982 (Part 1).

In the case of deformed bar, the nominal size is defined as that equivalent to the diameter or side of a plain bar having the same weight per meter run as the deformed bar.

8.2.2.7.2 Mild Steel

8.2.2.7.2.1 The physical requirements for mild steel, grade-I and II, and medium tensile steel bars are mentioned in table below.

Physical Properties of Bars

S. N.	Property	Nominal size of bars	Mild Steel		Medium Tensile Steel
			Gr. I	Gr. II	
1.	Ultimate tensile stress, kg/mm^2	All sizes.	42	38	55
2.	Yield stress, kg/mm^2 (Min.)	For bars up to & including 20 mm.	26	23.5	36
		For bars over 20 mm up to and including 40 mm.	24	21.5	34.5
		For bars over 40mm.	24	21.5	33
3.	Elongation-% (Min.) on gauge length 5.65, so where is the cross sectional area of the test piece.	For bars under 10 mm.	20	20	17
		For bars 10 mm and over.	23	23	20

Note:

1. Mild steel grade-II is available in two varieties designated as ST-42-0 and ST-32-0. ST-42-0 only shall be used subject to the above conditions. ST-32-0 shall not be used as reinforcement.
2. Grade-II mild steel bars shall not be used in the following conditions:
   i. Where the structures are located in earthquake zones subject to severe damage.
   ii. Where the structures are subjected to dynamic loading (other than wind loading) such as railway and highway bridges.
   iii. Where welding has to be employed for fabrication.
   iv. Where the design of the structures has been based on plastic theory.
3. Mild steel off grade: This variety of steel is not of uniform quality. Whenever this is to be used it should be subject to ultimate tensile strength and bending tests.

Weight: The tolerance on weight for round and square bars shall be the following percentage of the weight calculated on the basis that steel weighs 0.785 kg/cm^2 of cross-sectional area per meter run.

Nominal Size	Tolerance
Upto and including 8.0 mm	± 4 percent
Over 8.0 mm	± 2.5 percent

Tests: Unless otherwise specified, the requirements of IS: 226-1975 shall apply. All test pieces of bars shall be selected by the Engineer or his authorized representative either:

a) From the cutting of bars, or

b) If he so desires, from any bar on the coil after it has been cut to the required or specified length and test piece taken from any part of it.

In neither case, the test piece shall be detached from the bar or coil, except in the presence of Engineer or his authorized representative.

Tensile test	This shall be done as per IS: 226-1975 and IS: 1608-2005.
Bend Test	This shall be done as per IS: 1599-1985.
Re-test	This shall be done as per IS: 226-1975.

8.2.2.7.2.2 Hot Rolled Deformed Bars

The hot rolled mild steel and medium tensile steel deformed bars shall conform to IS: 1139-1966. The bars are provided with lugs, ribs or deformation on the surface of the bar to minimize the slippage of the bar in concrete when hot rolled from the steel billets.

The physical requirements are mentioned in table below.

S. N.	Property	Nominal size of bars	Mild Steel bars	Medium Tensile Steel bars
1.	Ultimate tensile stress, kg/mm^2	All sizes.	42	55
2.	Yield stress, kg/mm^2 (Min.)	For bars up to and including 20 mm.	26	36
		For bars over 20 mm up to and including 40 mm.	24	34.5
		For bars over 40 mm.	24	33
3.	Elongation percent,(Min.) on gauge length 5.65, so where is the cross sectional area of the test piece.	-	23	20

Weight: The tolerance on weight for round and square bars shall be the following percentage of the weight calculated on the basis that steel weighs 0.785 kg/cm^2 of cross-sectional area per meter run.

Nominal Size	Tolerance
Upto and including 8.0 mm	± 4 percent
Over 8.0 mm	± 2.5 percent

Tests:

Tensile test	This shall be done as per IS: 1139-1966.
Bend Test	This shall be done as per IS: 1599-1985.
Re-test	This shall be done as per IS: 1139-1966.

8.2.2.7.2.3 Other Structural Steel sections

(i) M.S. Flats and Plates

This shall conform to IS: 1730-1989.

(ii) Angle Iron Tee Joists and Channels

This shall conform to IS: 808-1989.

8.2.2.7.2.4 Holding Down Bolts

(i) Holding down bolts (upto 0.50m)

(ii) Holding down bolts (beyond 0.50m length).

Anchor bolts shall be placed in the concrete foundations. These should be held in positions with a wooden template. The anchor bolts shall be provided with suitable timber mould or pipe sheave to allow for adjustment. The timber mould or pipe shall be removed after initial set of concrete. The spaces left around anchor bolts shall have a sloping channel leading to the side of the pedestal and on the underside of the base plate to allow the spaces being grouted up after the base plate is fixed in the position along with column footing. Grouting shall be of cement mortar 1:3 (1 cement : 3 coarse sand) or as specified.

8.2.2.7.2.5 Rivets

Rivets shall be manufactured from rivet–bars of mild steel conforming to specification given in IS: 1148-1982. These rivets shall have snap head, flat counter sunk head, rounded counter sunk head or pan head as shown in drawing or as directed by the Engineer.

8.2.2.7.2.6 Bolts and Nuts

(a) *Black Bolts:* Also known as machine bolts, these bolts shall be made from rods and they come from the rolling mills and are not finished to exact size. A lower working stress is taken for these types of bolts than those of rivets and 'turned and fitted bolts'.

(b) *Turned and Fitted Bolts:* These bolts shall be made in an automatic lathe machine which turns the bolts to exact diameter for these bolts the same suitable stress are allowed as for rivets.

All bolt heads and nuts shall be hexagonal and of equal size, unless specified otherwise. The screwed threads shall conform to IS: 1363-2002 and the threaded surface shall not be tapered. The bolts shall be of such length as to project two clear threads beyond the nuts when fixed in position, and these shall fit in the holes without any shake. The nuts shall fit in the threaded ends of bolts properly.

Where turned and fitted bolt are required to be used in place of rivets, these shall be provided with washers not less than 6 mm thick, so that the nut when tightened, shall not bear on the unthreaded body of the bolt. Tapered washers shall be provided for all heads and nuts bearing on leveled surfaces. The threaded portion of the bolt shall not be within the thickness of the parts bolted together. The faces of bolt heads and nuts abutting against steel members shall be machine finished.

Where there is risk of the nuts being removed or becoming loose due to vibration or reversal of stresses, these shall be secured from slackening by the use of lock nuts, spring washers, cross cutting or hammering down of threads as directed by the Engineer.

The nominal length of the bolt shall be of the distance from the underside of the head to the head to the further end of the shank. The nominal diameter of the bolt shall be the diameter at the shank above the screwed threads.

Bolts, nuts and washers shall be thoroughly cleaned and dipped in double boiled linseed oil before use.

8.2.2.7.2.7 Tor Steel (Round)

Cold Twisted Bars shall conform to IS: 1786-2008. The physical properties for all sizes of twisted bars, whether plain or deformed are mentioned below:

1.	Tensile strength, kgf/mm^2, (Min.)	49.5
2.	0.2 percent proof stress kgf/mm^2 (Min.)	42.5
3.	Elongation, percent (Min.) on gauge length 5.65, so where is the cross sectional area of the test piece.	14.5

Weight: The tolerance on the weight of bars shall be the following percent – age of the weight calculated as above:

Nominal Size	**Tolerance**
Upto and including 8.0 mm	± 4 percent
Over 8.0 mm	± 2.5 percent

Tests: Selection and preparation of test samples, unless otherwise specified in this standard, the requirements of IS: 226-1975 shall apply. All test pieces shall be selected by the Engineer or his authorized representative either:

i) From the cuttings of bars, or

ii) If he so desires, from any bar after it has been cut to the required or specified size and the test piece taken from any part of it.

The test piece obtained in accordance with as above shall be full sections of the bars, as rolled and subsequently cold worked and shall be subjected to physical tests without any further modifications. No reduction in size by machining or otherwise shall be permissible. No test piece shall be annealed or otherwise subjected to best treatment. Any straightening which a test piece may require shall be done cold.

Tensile test	This shall be done as per IS: 226-1975 and IS: 1608-2005.
Bend Test	This shall be done as per IS: 1599-1985.
Re-bend test	This shall be done as per IS: 1786-2008.
Re-test	This shall be done as per IS: 1786-2008.

8.2.2.7.2.8 Storage of Reinforcement

Steel reinforcement shall be stored in such a way as to avoid distortion and prevent deterioration from corrosion. Where directed, the reinforcing bars shall be given a cement wash before stacking to prevent scale and rust.

Any reinforcement which has deteriorated or corroded or is considered defective by the Engineer shall not be used in the work.

8.2.2.7.2.9 Mode of Measurements

All the products of steel as mentioned in Clause 8.2.2.7.2 above shall be measured in 'quintals'.

8.2.3 Technical Specifications

8.2.3.1 Bending of Reinforcement

Reinforcing steel shall conform accurately to the dimensions given in the Bar Bending Schedules shown on relevant drawings.

Bars shall be bent cold to the specified shape & dimensions or as directed by the Engineer using a proper bar bender, operated by hand or power to attain proper radius of bends.

Bars shall not be bent or straightened in a manner that will injure the material.

Bars bent during transport or handling shall be straightened before being used on work, they shall not be heated to facilitate bending, unless permitted by Engineer.

Unless otherwise specified, a U-type hook at the end of each bar shall invariably be provided. The radius of the bend shall not be less than twice the diameter of the round bar and the length of the straight part of the bar beyond the end of the curve shall be at least four times the diameter of the round bar. In the case of bars which are not round and in the case of deformed bars, the diameter shall be taken as the diameter of a circle having an equivalent effective area.

The hook shall be suitably encased to prevent any splitting of the concrete.

A sketch of hook as shown as below:

Standard Hook

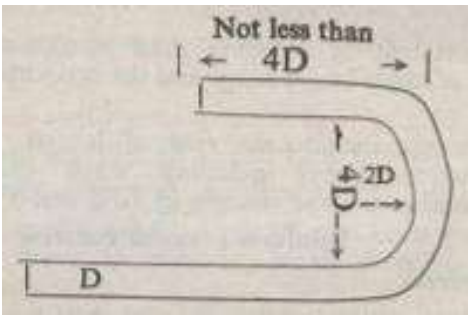

8.2.3.2 Placing of Reinforcement

All reinforcing bars shall be accurately placed in exact position shown on the drawings, and shall be securely held in position during placing of concrete by annealed binding wire not less than 1 mm in size and conforming to IS: 280 and by using stays blocks or metal chairs, spacers, metal hangers, supporting wires or other approved devices at sufficiently close intervals. Bars will not be allowed to sag between supports nor displaced during concreting or any other operation over the work. All devices used for positioning shall be of non-corrodible material. Wooden and metal supports will not extends to the surface of concrete, except where shown on the drawings. Placing bars on layers of freshly laid concrete as the work progresses for adjusting bar spacing will not be allowed. Pieces of broken stone or brick and wooden blocks shall not be used. Layers of bars shall be separated by spacer bars, precast mortar blocks or other approved devices.

Reinforcement after being placed in position shall be maintained in a clean condition until completely embedded in concrete. Special care shall be exercised to prevent any displacement of reinforcement in concrete already placed.

To protect reinforcement form corrosion, concrete cover shall be provided as indicated on the drawings. All bars protruding from concrete and to which other bars are to be spliced and which are likely to be exposed for an indefinite period shall be protected by a thick coat of neat cement grout.

In the case of columns and walls, vertical bars shall be kept in normal position with timber templates having slots accurately cut in for bar position. Such templates shall be removed after the concreting has progressed up to level just below them.

Bars crossing each other, where required, shall be secured by binding wire (annealed) of size not less than 1 mm and conforming to IS: 280 in such a manner that they do not slip over each other at the time of fixing and concreting.

As far as possible, bars of full length shall be used. In case this is not possible, overlapping of bars shall be done as directed by the Engineer. When practicable overlapping bars shall not touch each other, but be kept apart by 25 mm or 1¼ times the maximum size of the coarse aggregate whichever is greater, by concrete between them. Where not feasible, overlapping bars shall be bound with annealed steel wire, not less than 1 mm thickness twisted tight. The overlaps shall be staggered for different bars and located at points, along the span where neither shear nor bending moment is maximum.

8.2.3.3 Laps in Bars

The length of lap in bars shall not be less than:

(a) For bars in tension:

Bar diameter	Permissible stress
	Four times the bond stress given in table IS: 456 or 30 bar diameter, whichever is greater.

(b) For bars in compression:

Bar diameter	Permissible stress
	Five times the bond stress given in table IS: 456 or 24 bar diameter, whichever is greater.

8.2.3.4 Distances between Reinforcement Bars

(a) The distance between two parallel reinforcement bars shall be except as provided under (b) not less than the greatest of the following three distances:
   i) The diameter of either bar, if their diameters be equal.
   ii) The diameter of the larger bar, if the diameter be unequal.
   iii) 6 mm more than the nominal maximum size of the coarse aggregate comprised in such concrete.

   Note: A greater distance should be provided when convenient.

(b) The vertical distance between two horizontal main steel reinforcements, or the corresponding distance at right angles to two inclined main steel reinforcements shall be not less than 13 mm except at a splice or lap and except where one of such reinforcements is transverse to the other;

(c) The pitch of the main bars in a reinforced concrete solid slab shall not be more than four times the effective depth of such slab.

(d) The pitch of distributing bars in a reinforced concrete solid slap shall not be more than four times the effective depth of such slab.

8.2.3.5 Cover

Reinforcement shall have concrete cover, and the thickness of such cover (exclusive of plaster of other decorative finish) shall be as follows:

(a) at each end of a reinforcing bar not less than 25 mm nor less than twice the diameter of such rod or bar;

(b) for a longitudinal reinforcing bar in a column not less than 38 mm, nor less than the diameter of such rod or bar. In the case of columns of minimum dimension of 20 cm or under, whose bars do not exceed 13 mm diameter, 25 mm cover may be used;

(c) for a longitudinal' reinforcing bar in a beam not less than 25 mm nor less than the diameter of such rod or bar;

(d) for tensile, compressive, shear or other reinforcement in a slab, not less than 13 mm nor less than the diameter of such reinforcement; and

(e) for any other reinforcement, not less than 13 mm nor less than the diameter of such reinforcement.

(f) for all external work, for work against earth faces, and also for internal work where there exist particularly corrosive conditions, the cover of the concrete shall be increased by 13 mm over and above the figures given under (a) to (e) above.

Note: In case of rafts where resting on soil directly or on lean concrete, the cover for reinforcement shall not be less than 75 mm or as mentioned in the drawings.

8.2.3.6 Distribution, Shrinkage Temperature Reinforcement

Reinforcement for distribution and shrinkage and temperature stresses normal to the principal reinforcement shall be provided in floor and roof slabs where the principal reinforcement extends in one direction only. The area of such reinforcement shall be not less than 0.2 percent of the sectional area of concrete and in no case shall the pitch of such reinforcing bars be greater than (a) 4 times the effective thickness of slab, or (b) 0.6 m whichever is smaller. In case floor and roof slabs are exposed to sun, such steel shall not be less than 0.4 percent. The reinforcement shall be provided as per drawing.

8.2.3.7 Reinforcement position, stirrups position, stirrups spacing & off sets in compression reinforcement

8.2.3.7.1 Transverse reinforcement shall be placed on the neutral axis side of the longitudinal reinforcement, and on the inner side of any curve in the longitudinal reinforcement.

8.2.3.7.2 Stirrups shall have their ends hooked at the position of anchorage. The tensile reinforcement shall be within the loop of the stirrup and securely fastened thereto.

8.2.3.7.3 The spacing of stirrups shall not exceed a distance equal to the lever arm of resisting moment.

8.2.3.7.4 Where changes in the cross section of a compression member occur, the longitudinal reinforcement bars shall be slopped for the full length of the member or offset in a region where lateral support is afforded. Where offset, the slope of the inclined portion from the axis of the member shall not be more than 1 in 6.

8.2.3.8 Effective Diameter of a Bar

For purposes of this section, the effective diameter of a reinforcement bar shall be calculated as below:

a) For a bar, the cross-sectional area of which is constant along its length and in the case of deformed bars, the pattern of deformation of which is such that by visual inspection the cross-sectional area is substantially uniform along the length of bar, the effective diameter is that of a circle having the same area as the cross section of the bar.

b) For a bar, the cross-sectional area of which varies along its length, the effective diameter is that of a circle having an area equal to the least area of any cross section of the bar excluding deformation ribs. An allowance not exceeding 3 percent may, however, be added to the least area of the cross section on account of the ribs or any non-continuous sides or both.

8.2.3.9 Coupling and Welding of Bar

Whenever indicated on the drawings or desired by the Engineer, bars shall be joined by couplings which shall have a cross-section sufficient to transmit the full strength of bars. The ends the bars that are joined by coupling shall be upset for a sufficient length so that the effective cross-section at the base of threads is not less than the normal cross-section of the bar. The threads shall be standard white worth threads. Steel for coupling shall conform to IS: 226.

When premised or specified on the drawings joints of reinforcement bars shall be butt-welded so as to transmit their full strength. Welded joints shall preferably be located at points where steel will not be subject to more than 75 percent of the maximum permissible stresses and welds so staggered that, at any one section, not more than 20 percent of the rods are welded. Only electric arc welding using a process which excludes air from the molten metal and conforms to any or all other special provisions for the work will be accepted. Suitable means shall be provided for holding the bars securely in position during welding. It must be ensured that no voids are left in welding and when welding is done in 2 or 3 stages, previous surface shall be cleaned properly. Ends of the bars shall be cleaned of all loose scale, rust, grease, paint and other foreign matter before welding. Only, competent welders shall be employed on the work.

The M.S. electrodes used for welding shall conform to IS: 814.

Welded pieces of reinforcement shall be tested. Specimens shall be taken from the actual site and their number and frequency of tests shall be as directed by the Engineer.

8.2.3.10 Fire Resistance

Where fire resistance is an important feature of the design, the concrete cover may have to be increased; such increase depends upon the quality of aggregate and upon the severity and duration of the possible fire to which the structure may be subjected. Aggregates having low co-efficient of expansion e.g. formed slag, blast furnace slag, crushed brick aggregate, well-burnt clinker and lime stone are desirable for the fire protection. The siliceous aggregates e.g. flint, gravel, granite and other crushed natural stones other than lime stone should not be used where fire hazard is greater, because the quartz of which they largely consist has high co-efficient of expansion and, under heat, will expand and crack the concrete exposing the reinforcement to direct heat.

8.2.3.11 Stresses in Steel Reinforcement

For this, reference may be made to relevant IS Codes.

8.2.3.12 Tying and Positioning

Reinforcement shall always be accurately positioned and secured against displacement by tying with soft iron wire of not less than 1.00 mm and shall be supported in position clear of the forms, by concrete or metal chains or spacers or by metal hangers.

8.2.3.13 Future Bonding and Substitutions

Exposed reinforcement bars intended for bonding with future extensions shall be protected from corrosion.

Substitution of bars of different sizes than specified will be permitted only if authorized by the Engineer. If steel is substituted, it shall have an area equivalent to the design area or large, provided further that the safe bond stress is not exceeded, and also the effective depth is not less that provided in the design.

8.2.3.14 Splices

As far as possible, bars of full length shall be used. Splicing of bars except where such is shown on the plan will not be permitted without the approval of the Engineer. Splices shall be staggered and shall not be made at points of maximum stress.

8.2.3.15 Relative Positions

Tensile reinforcement shall always be placed within the loop of stirrups and shall be securely fastened thereto. Stirrups shall have their ends hooked at the position of anchorage. Transverse reinforcement shall always be placed on the neutral axis side of the longitudinal reinforcement, and on the inside of any bend in it.

8.2.3.16 To Conform to the Drawings

Reinforcement shall be carefully formed to the dimensions and positions indicated on the drawings or as directed by the Engineer.

8.2.4 Form Work

The form work shall be done as per specification described in Section 7 above.

8.2.5 Inspection

Full details of the numbers, sizes, lengths, weights, laps, welds, spacing of bars places in position in different parts of the work shall be recorded, certified and signed by the Engineer to show that all reinforcement has been placed correctly as per the sanctioned drawing or as ordered by the Engineer in writing before placing concrete. No concrete shall be deposited until the Engineer has inspected and certified the correctness of reinforcement, recorded the steel reinforcements and given permission to place the concrete in writing. After the approval of reinforcement by the Engineer, it will be the contractor's responsibility to see that the reinforcement spacing and arrangements are not tampered with in any way before concreting.

8.2.6 Concreting

8.2.6.1 Concrete

Concrete mix shall be as specified, and it shall conform to the relevant specifications for cement concrete. Concrete shall be mixed by mechanical mixers. The Engineer may, however, permit hand mixing under special circumstances by an order in writing.

8.2.6.2 Consistency

For reinforced cement concrete work the general requirement is that the concrete shall flow sluggishly into the forms and around the reinforcement without any segregation of coarse aggregate from the mortar and fill the form work completely without forming honey-combed concrete mass. The degree of consistency, which shall depend on the nature of

work and whether the concrete is vibrated or hand tamped, shall be determined by slump/Vee Bee Consistometer test as given in section 8.1.10 above.

8.2.6.3 Strength of Concrete

Reference may be made to Clause No. 8.1.4 above.

8.2.6.4 Placing of Concrete

Concrete shall only be commenced after the Engineer has inspected the form work and reinforcement as placed and passed the same. Form work shall be clean and free from all shavings, saw-dust, pieces of wood, or other foreign material, and shall be treated as described under section 7 'Form Work' above.

The concrete shall be gently deposited (and not thrown) as nearly as practicable, in its final position to avoid re-handling and shall be so deposited that segregation of aggregates does not occur. In deep trenches and footings concrete shall be placed though chutes as directed by the Engineer. In case of columns and walls, formwork shall be so adjusted that the vertical drop of concrete is not more than 1.5 metres.

In case of concreting of slab and beams, wooden, plank cat-walks supported directly on the form work by means of wooden blocks or logs shall be provided to convey the concrete to the place of deposition, so as not to disturb the reinforcement in anyway. No one shall be allowed to walk over the reinforcement.

In case of columns and walls, it is desirable to place concrete in full height in one operation, so as to avoid construction joints, but the rate of concreting in the vertical direction shall be restricted to one metre per hour.

It is necessary that the time between mixing (adding water) and placing of concrete shall not exceed 20 minutes so that the initial setting process is not interfered with.

Concreting, one commenced, shall be carried on continuously to completion useless otherwise directed.

During cold weather, concreting shall not be done when the temperature falls below 4.5^0 C. The concrete placed shall be protected against frost by suitable covering. Concrete damaged by frost shall be removed and work redone. During hot weather, precautions shall be taken to see that the temperature of wet concrete does not exceed 38^0 C. No concrete shall be laid within half an hour of the closing time of the day, unless permitted by the Engineer.

All bars projecting from piers, columns, beams, slabs etc. to which other bars and concrete are to be attached or bounded to later on, shall be protected with a coat of thin neat cement grout if the bars are not likely to be incorporated with the succeeding mass of concrete within the following 10 days. This coat of thin neat cement shall be removed before concreting.

8.2.6.5 Compaction

(a) The concrete shall be thoroughly compacted as the depositing proceeds by means of a suitable type of vibrators to get a dense concrete. The vibrators shall maintain the whole concrete under treatment in an adequate state of agitation, such that declaration and effective compaction is attained at a rate commensurate with the supply of concrete from the mixers. The vibration shall continue during the whole period occupied by placing of concrete, the vibrator being adjusted so that the centre of vibration approximates to the centre of the mass being compacted at the time of placing.

The Engineer may relax this condition of using vibrators at his discretion for certain items, depending on the thickness of the members and feasibility of vibration the same. For items, where the vibrators are not be used, it shall be the duty of the connector, to take the prior permission of the Engineer in writing before the start of the work. In circumstances, the concrete when laid in its final position shall be punned or tamped in thickness not exceeding 15 cm (confined to only 7.5 cm when working in the vicinity of reinforcement bars). Compaction shall be arrived out by skilled workmen with hammers and rods. It shall be continued until the concrete is thoroughly consolidated and is in perfect contact with reinforcement. The concrete shall be worked to the face of the forms. Special care shall be taken to ensure that the concrete is worked well into the bottom of all cavities and also to prevent distortion of rods while ramming around them and particularly to avoid pressing the rods close to form work.

(b) Concrete shall be judged to be compacted when the mortar fills the spaces between the coarse aggregate and begins to cream up to form an even surface. When this

condition has been attained the vibration shall be stopped in case of vibrating tables and external vibrators, and needle of vibrators, withdrawn slowly at the rate of 15 cm per minute in case of internal vibrators. The internal vibrators shall first be withdrawn at the rate of 15 cm per minute after which the external vibrators shall be stopped so that no depression is left in the body of the concrete. The maximum task of the vibrator shall be the compaction of 1.88 cubic metres of concrete per hour per kilo watt (kw) rating of the vibrator. The specific instructions of the makers of the particular type of vibrator used shall be strictly complied with.

Compactions shall be completed before the initial setting starts i.e. within 30 minutes of addition of water to the dry mixture. During compaction it shall be ensured that the needle vibrators are not applied on reinforcement which is likely to destroy the bond between concrete and reinforcement.

8.2.6.6 Joints

Joints shall be provided as shown in the drawings or as directed by the Engineer.

8.2.6.6.1 Construction Joint

For large works, where it is not practicable to carry on concreting continuously, the position of leaving off points or construction joints and the details of which shall be shown in the drawings or as indicated in Fig. 5 or as directed by the Engineer. Such joints shall be kept to the minimum and shall not be located in valleys. The joints shall be kept at places where the shear force is the minimum and these shall be straight and at right angles to the direction of main reinforcement. In case of columns the joints shall be horizontal and 10 to 15 cm below the bottom of the beam running into the column head and the portion of the column between the stepping off level and the top of the slab shall be concreted with the beam.

When stopping the concrete on a vertical plane in slab and beams, an approved stop-board shall be placed with necessary slots for reinforcement bars to pass freely without bending or any other obstruction. The construction joint shall be keyed by providing a triangular or trapezoidal filled nailed on the stop-board. Inclined or feather joints shall not be permitted. Any concrete following through the joints of stop-board be removed soon after the initial set. When concrete is stopped on a horizontal plane, the surface shall be roughened and cleaned after the initial set.

Walls shall be left off at any convenient height but the last layer shall be at the same level all-round the structure.

When the work has to be resumed, on a surface which has hardened (i.e. more than 48 hours old), the joint shall be thoroughly cleaned with wire brush and loose particles removed. It shall then be covered with a 13 mm layer of freshly mixed mortar comprising of cement and coarse sand in the same ratio as the cement and coarse sand in the concrete mix shall be applied before fresh concrete is laid.

When the work has to be resumed on a surface, which has not fully hardened (i.e. less than 48 hours old) the joint shall be thoroughly cleaned with wire brush and loose particles removed. The surface shall first be thoroughly wetted and all free water removed. A coat of neat cement slurry at the rate of 2.75 kg of cement per square metre shall then be applied on the roughened surface before fresh concrete is laid.

8.2.6.6.2 Expansion Joint

Expansion joints shall be provided as shown in drawing or as indicated in Fig. 6 or as directed by the Engineer. The filling of these joints with bitumen filler, bitumen felt or any such material and the provision of copper or brass plate etc. (as may be specified) shall be described and paid for separately.

8.2.6.6.3 Joints in Floors

Construction joints in floors shall be located near the middle of spans of slabs, beams, or girders, unless a beam intersects a girder that shall be offset a distance equal to twice the width of the beam. Adequate provision shall be made for shear by use of inclined reinforcement.

8.2.6.6.4 Joints in Columns

Joints in columns shall be made at the underside of the floor. Haunches and column capitals shall be considered as continuous with, and part of the floor.

8.2.6.6.5 Expansion Joints in Long Structures

Structures exceeding 46 m in length shall be divided by one or more expansion joints. Structures in which marked changes in plan dimensions, take place abruptly shall be provided with expansion joints at the sections where such changes occur.

Length of a structure where expansion joint has to be provided shall be determined after taking into consideration various factors, such as temperature, exposure, to weather, the time and season of the laying of the concrete etc. Under no circumstances shall be structure of 46 m or more be without an expansion joint.

8.2.6.6.6 Expansion Joints in Bridges

Wherever expansion joints are provided in the main structure of a bridge, expansion joints must be provided in the concrete flooring immediately above them, such joints should be constructed with two sheets of tarred paper previously laid on the support and be filled with preformed plastic material 13 mm thick which should be placed in the forms before concrete is laid so as to give a projection above the top surface of the concrete; this projection being trimmed of flush with the surface after the concrete has set.

8.2.6.6.7 Continuous Work Joints to be at Contractor's Cost

Concrete shall be deposited continuously and as rapidly as practicable, until the unit of operation, approved by the Executive Engineer, is completed. Construction joints, as at points not provided for in the drawings shall therefore be deemed to be for the convenience of the Contractor and special work entailed shall be carried out by him within the rate.

8.2.6.6.8 Construction Joints Position

Where construction joints are unavoidable, concreting must be stopped as near as possible at the centre of beams or slabs and not over the support, in order to make joint whose plane in normal to the principal lines of stress and at right angles to the span. Construction joints shall coincide with structural joints wherever possible. If made elsewhere, they shall be so located and made to impair the strength and/or appearance of the structure in the least possible manner. Construction joints are subject to the approval of the Executive Engineer with respect to their position, number and construction.

8.2.6.6.9 Horizontal Joints

Where resistance to horizontal shear is essential, a key shall be formed by partially embedding reinforcing rods, or by forming mortises in the concrete.

8.2.6.6.10 Sliding Joints

When sliding joints are called for on the plans, the seat of the sliding joint shall he finished to a smooth plane surface and allowed to harden. The seat shall be covered with the required thickness of bituminous material or otherwise treated as specified on the plans or as directed by the Engineer.

8.2.6.6.11 Concreting under Water/Extreme Weather Conditions

For this, reference may be made to Clause 8.1.14 and 8.1.15 above.

8.2.6.7 Finishing

(a) In case of roof slabs the top surface shall be finished even and smooth with wooden trowel, before the concrete begins to set.

(b) The surface that becomes exposed on the removal of forms shall be examined by the Engineer, before any defects are made good. Projections due to defective workmanship on the concrete surface shall be removed by careful chiselling work that has sagged or bulged out, or contains honey-combing shall be rejected. Honey-combing of minor nature shall be accepted. Where so stated in the description of the item, the exposed surface of R.C.C. work shall then be plastered or rendered with cement mortar 1:3 (1 cement: 3 fine sand) to give a smooth and even surface true to line and form.

Note: The tops of slabs, treads and landings, faces of risers in stairs and vertical faces of lintels shall not be considered as exposed surface.

Where the exposed surface is to be finished otherwise than plastering with cement mortar 1:3 (1 cement: 3 fine sand), deduction for not plastering with cement mortar 1: 3 shall be made if the same stand included in the rate for the item of R.C.C. work and the surface finishing as actually done shall be paid for separately.

(c) The exposed surface which is to receive plaster or where it is to be joined with brick masonry wall, shall be properly roughened immediately after the removal of form work, taking care to remove the laitance completely without disturbing the concrete. The

roughening shall be done by hacking, wire-brushing etc. as necessary. Before the surface is plastered it shall be cleaned and wetted so as to give to give good bond between concrete and plaster.

The R.C.C. work shall be done carefully so that the average thickness of plaster required for finishing the surface and bringing it shape and form is not more than 6 mm.

(d) The surface of R.C.C. slab on which the cement concrete or mosaic floor is to be laid shall be roughened with brushes while the concrete is green. This shall be done carefully without disturbing the concrete. Before laying the floor, the laitance shall be removed, the surface of slab hacked and a coat of cement slurry at 2.75 kg of cement per square metre shall be applied, so as to get a good bond between R.C.C. and concrete floor. The cost of applying cement slurry shall be paid for separately.

8.2.6.8 Curing

Curing shall be as per Clause No. 8.1.19 above.

8.2.6.9 Basis and Standard of Acceptance

This shall be as per Clause No. 8.1.20 above.

8.2.6.10 Bonding New and Old Work

When the work has to be resumed on a surface which has hardened, such surface shall be roughened. It shall then be swept clean, thoroughly wetted, and covered with a 13 mm layer of mortar composed of cement and sand in the same ratio as the cement and sand in the concrete mix. This 13 mm layer of mortar shall be freshly mixed and played immediately before the placing of the concrete.

Where the concrete has not fully hardened, all laitance shall be removed by scrubbing the wet surface with wire or bristle brushes, care being taken to avoid dislodgement of particulars of coarse aggregate. The surface shall be thoroughly wetted and all free water removed. The surface shall then be coated with neat cement grout. The first layer of concrete to be placed on this surface shall not exceed 15 cm in thickness, and shall be well rammed against old work, particular attention being paid to corners and close spots.

8.2.6.11 Maintenance

Ordinarily maintenance will not be needed for dense concrete constructed in accordance with these specifications. Where however, the concrete is exposed to attack by weather or chemical action, maintenance may be needed. Protective coatings i.e. cement-based paints etc. will delay or prevent deterioration of the concert in such cases. The protective coatings to be used will depend upon the particular form of exposure, but it should be durable and able to adjust itself to elastic and thermal movements of the structure. All protective coatings should be maintained in good condition by renewed application during the life of the structure.

Painting of concrete structures shall conform to specification given in section 15.5 below. After every three year a periodical check should be made to detect any excessive cracking or other defect or the concrete.

Where corrosion of the bars has caused staining or has loosened the concrete cover, the life of the structure can be considerably prolonged by exposing, cleaning and recovering the bars. Such structures should however be tested occasionally for safety by carrying out load tests. The reinforcement should also be checked frequently to find out corrosion and loosing of the concrete cover.

8.2.7 Measurements

8.2.7.1 Measurements shall be done in cubic metre. The measurements for the following items shall be done separately:

i) Foundations, footings, bases of columns and the like and mass concrete.
ii) Walls (any thickness but not less than 0.10 m thickness) including attached pilasters, buttresses, plinth and string courses etc., from top of foundation upto floor two level.
iii) Suspended floor, roofs, landings, shelves and their supports balconies, girders, bressumers and cantilevers upto floor two level.
iv) Columns, pillars, posts and struts, upto floor two level.
v) Stair cases (except spiral stair cases) excluding landing but including preparing of top surface and finishing of nosing upto floor two level.
vi) Spiral stair cases including landing etc. upto floor two level.
vii) Arches up to floor two level.
viii) Chimney and shaft upto floor two level.

ix) Well steining.
x) Vertical and horizontal (thickness not more than 0.10 m) individually or forming box louvers and projected band upto floor two level.
xi) Lintels, beams, girders, bressumers and cantilevers upto floor two level.
xii) Chajjas.
xiii) Kerbs, steps and the like.
xiv) String courses, coping, bed plates, anchor blocks, plain window sills and the like.
xv) Small arched lintels not exceeding 1.5 m clear span over ceilings, copings and the like.
xvi) Moulding as in cornices, window sills etc. exceeding 15 cm in girth.
xvii) Mouldings as in cornices, window sills etc. not exceeding 15 cm in girth.
xviii) Eaves board.

Reinforced concrete shall be measured as per Clause No.8.1.21 above.

8.2.7.2 No deductions shall be made for the following:

i) Ends of dis-similar materials (e.g. joists, beams, posts, girders, rafters, purisms trusses, corbels, steps etc.) upto 500 sq.cm. in section.
ii) Opening up to 0.1 sqm.

Note: In calculating area of openings the size of opening includes the thickness of any separate lintels or sills. No extra labour or forming such opening or voids shall be measured.

iii) The volume occupied by reinforcement shall not be deducted; and
iv) The volume occupied by drainage, water pipes, conduits, etc. not exceeding 100 sqm each in cross-sectional area shall not be deducted.

8.2.7.3 Nothing extra shall be paid for leaving and finishing such cavities and holes.

All plain, rebated, grooved, locking and tongued joints shall be deemed to be included in the process of process of laying.

8.2.7.4 Walls, suspended floors, landings and projecting proration of chajjas of average thickness less than 15 cm. shall be grouped separately.

8.2.7.5 The slab shall be taken as running continuously through and the beam as the portion below the slab except in case of inverted beam in which case the measurements shall be taken as per Clause 8.2.7.6 below.

8.2.7.6 In floor one column shall be measured form the top of footings or pedestals to the floor two level of the floor level. In the case of columns for flat slabs the flare of the columns shall be included with the column for measurement.

Beams shall be measured from face to face of the columns and shall include haunches, if any, between the columns and beams. The depth of the beams shall be measured from the bottom of the slab the bottom of the beam except in case of inverted beam, where it shall be measured from top of slab to top beam. The cross-section of the beam shall be the actual cross-section below or above the slab. Shaded portions in sketches below illustrate measurement of cross-section of beams for a few typical cases.

8.2.7.7 Walls and retaining walls shall be measured from the top of footings.

8.2.7.8 Chajja along with its beaming wall shall be measured in cubic metre nearest to two places of decimal. When chajja is combined with beam or lintel, the common portion shall be measured as chajja when chajja or balcony is in continuation of roof of suspended floor, it shall be measured upto the central line of bearing.

Whenever vertical fins and chajjas are combined, the chajjas shall be measured clear between the fins. The vertical fins shall be measured through.

8.2.7.9 The thickness of R.C.C. work shall measure correct to a 0.5 cm. Other dimensions of R.C.C. work shall be measured correct to a cm.

For measurements of R.C.C. under water, reference may be made to Clause No. 8.1.21 above.

8.2.8 Rate

The rate includes all operations as described above, but excludes the cost of formwork and reinforcement, including bending, binding and placing in position unless otherwise specified. The rate includes the cost of materials and labour including water charges to be carried out for different operations. It also includes the contractor's profit and overhead charges @ 10% and 5% respectively.

Separate rate has been provided for providing mild steel/tor steel reinforcement for R.C.C. work including bending, binding and placing in position complete upto floor level two.

In case water borne aggregates to be used instead of graded/crushed stone aggregates, the rates shall be suitably decreased as mentioned in the applicable HPPWD Schedule of Rates.

8.3 Finishing

8.3.1 Rendering

The top of suspended floors, landings and stair cases, (treads and risers) shall be rendered smooth with cement mortar 1:2 (1 cement: 2 sand). The floating coat of neat cement shall also be applied and then the surface should be cured properly. The surface shall be protected with a layer of 7.5 cm earth laid over 15 mm layers of sand in case of suspended floors, landings and steps etc. After the proper curing has been done, the earth and sand etc. should be removed subsequently and all the surfaces should be cleaned.

The measurement is to be done in square metres and the rate includes all the operations described above.

8.3.2 Application of cement slurry

The surface of R.C.C. slab on which the cement concrete or mosaic floor is to be laid shall be roughened with brushes while the concrete is green. This shall be done carefully without disturbing the concrete. Before laying the floor, the laitance shall be removed, the surface of slab hacked and a coat of cement slurry at 2.75 kg of cement per square metre shall be applied so as to get a good bond between R.C.C. and concrete floor. The cost of applying cement slurry shall be paid for separately.

The rate includes cost of cement, carriage by mechanical transport up to 1 km and by head load up to 100 m, water charges, contractor's profit @ 10% and over-head charges @ 5%.

8.3.3 Finishing on exposed surfaces

This shall be as per Clause 8.2.6.7 above.

The rate includes cost of materials, labour, water charges, contractor's profit @ 10% and over-head charges @ 5%.

8.3.4 Plaster drip

Plaster drip or throating and mouldings to R.C.C. chajja shall be provided as per the approved drawings or as per the direction of the Engineer. The rate includes cost of labour, water charges, contractor's profit and over-head charges etc.

8.3.5 Bitumen mix filler

The expansion joints shall be filled in position with bitumen mix filter in the proportion of 80 kg of hot bitumen, 1 kg of cement and 0.25 cum of sand. The cost of materials, heating of bitumen, carriage of materials and labour including contractor's profit and over-head charges have been included in the rates.

8.3.6 Blown bitumen in expansion

Blown bitumen shall conform to specifications given in section 8.2.2.6 above. The bitumen shall be used 1050 kg per cum of the cubical content of expansion joints and 5% wastage shall be allowed on the bitumen. The rate includes the cost of stem coal for heating bitumen, carriage of bitumen and coal upto 1 km by mechanical transport and 100 metres on head load and labour for heating, mixing and filling etc. It also includes contractor's profit @ 10% and overhead charges @ 5%.

8.3.7 Impregnated fibre board

The impregnated fibre board shall conform to requirement of IS: 1838 and shall be got approved from the Engineer. The joint filler shall consist of large pieces and assembling of small pieces shall be avoided. The rate includes the cost of impregnated fibre board, primer ceiling compound and labour. The rate also includes contractor's profit and over-head charges etc.

8.4 Precast Work

8.4.1 Plain Cement Concrete Precast Work

8.4.1.1 Workmanship

8.4.1.1.1 General

The concrete shall consist of a mix of 1:2:4 (1 cement: 2 coarse sand: 4 graded stone aggregate of 12.5 mm nominal size) or 1:3:6 (1 cement: 3 coarse sand : 4 graded stone

aggregate 12.5mm nominal size) or as specified in the nomenclature of the item. Precast concrete units shall be cast in suitable moulds. Each unit shall be cast in one operation. Concrete shall be thoroughly compacted in the moulds with blunt ended steel rods or by external form vibrators. Alternatively, vibrating table may be used.

All precast units shall be sound and free from cracks or other defects that would interfere with the proper placing of units or the strength or performance of units or the structures.

All precast units shall be clearly marked to indicate the top of the member and its location and orientation in the structure if so directed by the Engineer. While the concrete is still green each unit shall be marked with the date of casting.

8.4.1.1.2 Form Work

This shall be as per specifications in section 7 of 'Form Work' above.

8.4.1.1.3 Consistency of Concrete shall be as per Clause 8.2.6 above.

8.4.1.1.4 Strength of Concrete shall be as per Clause 8.2.6 above.

8.4.1.1.5 Mixing of concrete shall be as per Clause 8.2.6 above.

8.4.1.1.6 Placing of Concrete shall be as per Clause 8.2.6 above.

8.4.1.1.7 Compaction shall be as per Clause 8.2.6 above.

8.4.1.1.8 Curing

Precast articles (after setting) shall be wet cured for 10 days after casting or steam cured in a plant, so as to give the specified strength, before use in the work.

8.4.1.1.9 Finishing

All exposed faces of precast articles shall be brought to a fair and even surface which in the mould surfaces of precast units which are intended to be plastered shall be sufficiently rough to provide a good key for the plaster. Any defect found after the removal of the mould shall be made good with cement mortar 1:3 (1 cement : 3 coarse sand).

8.4.1.1.10 Storage and Handling

Precast units shall be stored, transported or placed in position in such a manner, that these will not be overstressed or damaged.

8.4.1.1.11 Erection

Precast members shall be adequately braced and supported during erection to ensure proper alignment and safety and such bracing or support shall be maintained until adequate permanent connections are provided.

8.4.1.1.12 Measurement

Precast cement concrete solid articles shall be measured separately, and shall include all moulds, finished faces, and hoisting, erection and setting in position in 1:2 cement mortar (1 cement : 2 coarse sand).

8.4.1.2 Rate

The rate is in inclusive of the cost of labour and materials involved in all the operations described under various paras pertaining to this item in this section.

8.4.2 Reinforced Cement Concrete Precast Work

8.4.2.1 Workmanship

8.4.2.1.1 General

8.4.2.1.2 Form Work

8.4.2.1.3 Consistency

8.4.2.1.4 Strength of concrete

8.4.2.1.5 Mixing of concrete

8.4.2.1.6 Placing of concrete

8.4.2.1.7 Compaction

8.4.2.1.8 Curing

8.4.2.1.9 Finishing

8.4.2.1.10 Storage & handling

8.4.2.1.11 Erection

These shall be same as per respective paras under the corresponding subheads of sub-section 'Plain Cement Concrete Precast Work' (Clause 8.4.1 above).

8.4.2.1.12 Reinforcement

Bending, over lapping and placing the position of reinforcing bars shall be as per Clause 8.2.3 above under sub-section "Reinforcement Concrete in-situ Work".

8.4.2.2 Measurements

R.C.C. precast work shall be described as including as moulds, finished faces reinforcement (where provided), hoisting and setting in position including mix and ingredients of setting mortar and measured separately under the following categories:

a) Kerbs, steps and like;

b) String or lacing courses, coping bed plates, anchor blocks, plain window cells, shelves and the like;

c) Wall panels, floors/roof slabs/units;

d) Lintels, beams, columns, posts etc.; and

e) Doors and window frames.

The jali shall be measured in square metres for its gross dimensional area. The length and breadth shall be measured correct to a cm. The thickness shall not be less than specified.

Ornamental or moulded cement, concrete work shall be measured separately in running metres/or extra over normal C.C. items.

8.4.2.3 Rate

The rate includes the cost of materials and labour involved in all the operations described under various paras pertaining to this item in this section.

8.5 Faulty Concrete Construction

8.5.1 Failures vs. Defects

When one considers the many possibilities for slighting or improperly performing the work of making concrete, actual failures are relatively rare. Concrete may have been either deficient in cement, made with dirty aggregates, drowned with water, or allowed to dry out-but unless two or several of these occur at the same time, failure will not usually result. It is believed that poor work is generally due to lack of chemical knowledge rather than to actual dishonesty.

8.5.2 Defects

Defects, however, occur in most structures which are otherwise well built and which are satisfactorily performing their intended service. Sometimes these defects are so many and so glaring that the structure may become unfit for use, but more often they are conspicuous rather than serious. In any case, it is worthwhile to avoid defects by incorporating sound ingredients into a uniformly dense mixture of concrete and by placing and curing this mixture with reasonable care.

The various operations involved in making concrete are well known to builders. Good results are obtained not so much because of what is done as because of how it is done. Workmanship is the key note to a first-class job, and general carelessness of haste is the sure forerunner of defects. The fact that parts (usually nine-tenths or more) of even a defective structure are sound and hard shows that the same builder could get satisfactory results when the requirements for good concrete were met.

This chapter is not intended either in criticism or commendation of concrete, but to point out that too often small structures are built of needlessly low quality and that consequently they are unsightly and short-lived. It is hoped that builders generally may become dissatisfied with the lax standards of the past twenty yearly and will in the future build concrete of the high quality which can be obtained when desired, as shown by numerous examples.

In addition to the specific causes leading to poor results listed in the following table, it may be said generally that large contributing factors are aiming at too low quality and lack of proper supervision and inspection.

9. Stone Work – Masonry in General & in Retaining/Breast Walls, and Soling

9.1 Materials

9.1.1 Stone

Stone used for stone masonry shall comply with specifications given below.

9.1.1.1 Quarried Stone in Blocks (Undressed)

The stone shall of the specified variety (such as granite, trap stone, sand stone, quartzite, etc.) The stone shall be obtained only from an approved quarry and shall be hard, sound, durable and free from defects like cavities cracks, sand holes, flaws, injurious veins, patches of loose or soft material, etc. Stone with round surface shall not be more than 5 percent when tested in accordance with IS: 1124-1974 (Method of test for water absorption of natural building stones). The minimum crushing strength of building stone shall be 200 kg/sqm unless higher minimum strength is specified in any particular case. All stone shall be obtained by quarrying large massive rock unless otherwise specified.

9.1.1.2 Ordinary Quarried Stone

This stone shall be of the same specification as per item 9.1.1.1 above. This type of stone shall however be used in masonry or filling voids etc.

9.1.1.3 Through Bond Stones and Quoins

9.1.1.3.1 Bond Stones

The Bond Stones or through stones running right across the thickness of the walls, shall be provided in walls up to 600 mm thick. In thicker walls 2 stones over-lapping each other by at least 150 mm shall be provided across the thickness of the wall to form Bond Stone. There shall be at least 1 bond stone for 0.5 square meter of wall surface. The bond stone marked by the distinguishing latter during construction for subsequent verification and shall be laid staggered in subsequent layers.

In case of highly absorbent type of stones (Porous lime stone and sand stone etc.) the bond stone shall extend about 2/3rd into the walls. Through stones in such cases may give high to dump penetration. Therefore, for all thicknesses of such walls a set of 2 or more bond stone over-lapping each other by at least 150 mm shall be provided. Where Bond Stones of suitable lengths are not available Cement Concrete Block of 1:3:6 mix(1 cement: 3 coarse sand : 6 graded stone aggregate 20 mm nominal size) shall be used.

Through and Bond Stone shall broadly be staggered separately from ordinary building stone and the stack shall be marked to distinguish it from the rest.

9.1.1.3.2 Quoins

The Quoins or corner stone shall be selected neatly dressed· with Hammer and or chisel to form required corner angle and laid header and stretcher alternately. The bed and top surfaces of Quoins shall be chisel dressed to give horizontal point. The quoins shall have uniform chisel draft of at least 25 mm width at 4 edges of each exposed face of the edges of the same face being in one plane. No quoins stone shall be smaller than 0.025 m^3 (25 dm) in volume and it shall also not be less than 300 mm in length, 25% of it being not less than 500 mm in length.

9.1.1.4 Stone for Soling/Filling Crates etc.

9.1.1.4.1 Source

Stone for soling/filling crates shall be obtained from the quarries/ sources as specified in the Contract. When the source/quarry is not specified these shall be obtained from the source as, approved by the Engineer, from which the best material nearly used for the purpose in the locality are obtained. The sample of the material shall be kept in the custody of Engineer and all subsequent supplies shall conform strictly to the sample.

9.1.1.4.2 Stone for Soling

9.1.1.4.2.1 General

Stone for soling shall be granite, trap, basalt, lime stone, laterite, Kankar or any other as indicated. Stone shall be clean, hard, free from laminations, unsound fragment and free from decay and weathered stuff.

9.1.1.4.2.2 Collection

The soling stone shall be collected in the requisite quantity to give the specified depth after laying. Material collected, in excess, shall not be paid for and if not removed within 1 month to field measurement, shall become the property of Govt. The collection shall begin in each km from the end farthest from the source of supply and shall proceed continually till the km has been filled.

9.1.1.4.2.3 Size

Soling stone shall not be less than 4 kg in weight or more than the depth of the soling in thickness with only enough small stones to fill interstices after the large stones have been hand packed in laying. Soling stone shall not be more than 23 cm nor less than 10 cm in any direction.

9.1.1.4.2.4 Tests

Different tests shall be as per requirements of Specification for Road and Bridge Work (MORT&H) published by Indian Road Congress (IRC).

9.1.1.4.2.5 Royalty etc.

Unless otherwise specified all charges for royalty, forest and other taxes, octroi etc. shall be paid by the Contractor and are included in the rates.

9.1.1.4.3 Stone for Filling Crates

9.1.1.4.3.1 General

The Stone used in Apron shall be sound and durable and fairly regular in shape. Stone subject to marked deterioration by water or weather shall not be used.

The size of stone shall be as large as possible. In no case any fragment shall be less than 40 kg. The specific gravity of stones shall be as high as possible and it shall not be less than 2.50.

9.1.1.4.3.2 Royalty etc.

Unless otherwise specified all charges for royalty, forest and other taxes, octroi etc. shall be paid by the Contractor and are included in the rates.

9.1.1.5 Stone for Pitching

9.1.1.5.1 General

Stone subject to marked deterioration by water or weather will not be accepted. The stone shall be sound, hard, durable and fairly regular in shape. The best stone procurable shall be supplied and in no case shall any fragment weigh less than 40 kg unless otherwise permitted by the Engineer. The size of spalls shall be minimum 25 mm and shall be suitable to fill the voids in the pitching.

9.1.1.5.2 Royalty

Unless otherwise specified all charges for royalty, forest and other taxes, octroi etc. shall be paid by the Contractor and are included in the rates.

9.1.2 Mortar

Mortar used shall comply with specifications as given in section 8.2.2.5 above.

9.1.3 Concrete

Concrete used shall comply with specifications as given in section 8 above.

9.1.4 Sand

Sand shall comply with specification given in section 8.1.2.2.2 above.

9.1.5 Water

Water for stone masonry shall comply with specification given in section 8.1.2.3 above.

9.2 Stone Masonry

9.2.1 General specifications

9.2.1.1 Dressing

Dressing of stones shall be as specified for an individual type of masonry work and it shall conform to the general requirement for dressing of stones covered in this chapter. Other specific requirements are covered separately with respect to particular type of stone work.

9.2.1.2 Bond stone

Through and bond stones shall broadly be stacked separately from ordinary building stones and the stack shall be marked to distinguish it from the rest. Marks must be made on each bond.

9.2.1.3 Wetting of stones

All stones for masonry in cement or lime mortar must be thoroughly wetted before being laid to prevent absorption of water from mortar and the masonry work must be kept wet while in progress. Care being taken to avoid washing mortar out of the joints.

9.2.1.4 Preparation of bed

Stones shall be laid on their natural quarry beds so that the pressure borne by them is normal to the beds. The courses shall be perpendicular to the pressure to be borne, in case of batter walls, beds of stones & the plane of courses should be at right angles to the batter.

9.2.1.5 Laying of stones

Wherever practicable, the whole masonry in any structure must be carried up at a uniform level throughout. Where breaks are unavoidable, the joints shall be made in gradual steps. Cross walls must be carefully bonded into main wall and all junctions of walls to be formed at the time the walls are being built.

9.2.1.6 Work to proceed uniformly

Wherever practicable, the whole masonry in any structure must be carried up at a uniform level throughout. Where breaks are unavoidable, the joints shall be made in gradual steps. Cross walls must be carefully bonded into main wall and all junctions of walls to be formed at the time the walls are being built.

9.2.1.7 Bonds and Joints

Joints parallel to the external pressure must be staggered and should not be continuous. In other words, the stone in any course shall overlap the joint in the course below. In order to obtain sufficient transverse bond, the prescribed number of headers must extend through the entire thickness of these walls or from outside face to a prescribed depth within thick walls. Such headers are termed as through or bond stones. The practice of building two thin faces of stone masonry tied with occasional through stones and filling up the space between the masonry faces with fine, small or dry stone backing shall not be permitted. To obtain proper bond at angle junction of walls, the stone at each alternate shall be carried into each of the respective walls.

All stones shall be laid full in mortar both in bed and in vertical joints and settled carefully in place with a wooden mallet immediately on placement so that it is solidly bedded in mortar before the same has set. Clean chips and spalls shall be wedged into the mortar joints and beds wherever necessary, to avoid thick beds or joints of mortar. Whenever foundation masonry is laid directly on rock, the face stones of the first course shall be dressed to fit into the rock snugly when pressed down in the mortar bedding over the rock. No dry or hollow space shall be left anywhere in the masonry and each stone shall have all the embedded faces completely covered with mortar.

Courses of the masonry shall ordinarily be pre-determined. They shall generally be of the same height. Where there is variation in the height of courses, larger courses shall be placed at lower levels, with height of courses decreasing gradually towards the top, unless otherwise specifically mentioned in the contract.

All necessary chases for joggles, dowels and cramps shall be formed in the stone beforehand. Bell shaped bond stones or headers shall not be used. In case of thick walls, bond stones shall overlap each other in their arrangement.

All connected masonry in structure shall be carried up at one uniform level throughout as far as possible, but when breaks, are unavoidable, the masonry shall be raked in sufficient long steps to facilitate jointing of new work with old. The stepping of raking shall not more than 450 with the horizontal. Wing walls, abutments and piers etc., shall be carried up truly plumb or to the specified batter.

Face work and hearting shall be brought up evenly. The top of each course, however, shall not be levelled up by use of flat chips.

9.2.1.8 Quoins

Quoins shall be laid as header and stretcher in alternate courses. Quoins and jambs shall be dressed at a right angle to the bed, the corners being straight and vertical. In the case of masonry with hammer dressed stones, a chisel draft 2.5 cm wide shall be given on each external face to allow of accurate plumbing. If for architectural reasons, chisel draft is not to be allowed, the corner shall be dressed to a vertical line as best as possible. The cost of quoins and jambs is included in the rate for masonry.

9.2.1.9 Plumb bob and straight edges

In case of vertical walls, all masonry shall be taken up truly plumb and each set of four masons shall be provided with a plumb bob and straight edges. In case of default the Assistant Engineer will supply these, deducting the cost from the Contractor.

9.2.1.10 Lintels and inside stones

All lintels and inside stones not to be plastered over shall be of the full thickness of the wall in which they are laid, including the plastered face or faces with a grooved joint at the junction of the plaster and stone.

9.2.1.11 Rounded corners

Interior and exterior-corners of walls and projecting angles shall be rounded if specified. The drawings shall also indicate the shapes and radii of rounded corners. Rounding of corners is payable separately in case of exposed masonry, but not in case of masonry to be plastered.

9.2.1.12 Cleaning work and striking joints

Mortar shall be confined to the joints and none should be smeared over faces of stones that are not to be plastered. If some mortar does fall on the stones during construction, it should be removed immediately and not allowed to set. Where pointing is not provided to be carried out afterwards, the joints in each day's work shall be struck by a separate mason following up the masonry work. This shall be paid for separately by superficial measurements as striking joints.

9.2.1.13 Fixtures

All iron, stone, concrete or other fixtures, returns, buttresses etc. shall be built and bonded into the masonry in the correct position as work proceeds and not instead or joggled on afterwards. Fixtures shall be built into the masonry in 1:3 cement sand mortar. The work of building these fixtures in the masonry is included in the rate of masonry irrespective of the sources of supply of these fixtures.

9.2.1.14 Bed plates

Bed plates shall be provided under the end of beams, girders, roof trusses etc. Bed plates shall be either chisel dressed on top and bed, or of cement concrete, if so specified, and shall conform to the dimensions given in the drawings. Bed plates shall be carefully laid with fine joints with the necessary packing to give the correct level.

9.2.1.15 Dowels and cramps

Dowels, cramps and joggles shall be supplied and used wherever specified or ordered by the Executive Engineer. Cramps shall be of gun metal and shall be in length of 16.5 cms & 30 cms, in thickness 6 mm/15 mm/25 mm in width as specified and having each end turned at right angle. Iron cramps shall not be used. Cramps shall be forged and set with neat cement. Dowels & joggles shall be of double wedged made from similar stone, set in neat cement. Iron dowels or joggles whether galvanised or otherwise shall not be used.

9.2.1.16 Scaffolding

Proper scaffolding with tightly fastened joints having two sets of vertical supports (of which the wall may be one) shall be provided. The scaffolding should be strong enough to bear construction loads, and if the Engineer does not consider it strong enough, he can call upon the Contractor to strengthen it, but nothing in this case shall be deemed to mean that he is responsible for the safety of either the work and scaffolding or of the workmen using the scaffolding. This responsibility shall entirely be that of the Contractor. Where stone wall has to remain exposed on both faces, double scaffolding shall be provided.

9.2.1.17 Weather protection and watering

Stone masonry laid in cement or lime mortar shall be protected during construction from the effects of rain and frost by suitable over, if necessary. It shall be kept moist for a period of 10 days. The work shall be left flooded at the end of each day with 25 mm of water. Stone masonry laid in mud mortar shall not be watered but shall be protected during construction from rain or from uneven drying.

9.2.2 Stone Work – Individual Items

Particular specifications for individual items given below are in addition to the general specifications for stone work given above which shall apply to the individual items so far as they are applicable or unless otherwise specified.

9.2.2.1 Dry Random Rubble Masonry (Uncoursed/Brought to Course)

9.2.2.1.1 General

Dry rubble masonry or dry stone walling shall be used in constructing breast and retaining walls, revetments walls and parapets.

9.2.2.1.2 Stones

Stones shall comply with specifications as given in section 9.1.1 above. The stone shall not be less than 15 cms in any direction except the packing stone. The face stone's average breadth shall not be less than the height and average length not less than 1-1/2 times the height for stones upto 20 cm height and not less than 1-1/3rd the height or 30 cm, whichever is more, for stones exceeding 20 cms in height.

The bond stones shall run right across the wall acid shall not be less than 300 sq.cm. in cross section at any point. In masonry wall thicker than 60 cm two bond stones overlapping each other by at least 150 mm may be used in conjunction. The bond stones shall be provided @ 2 per square metre of front face area.

The bond or through stones shall be of the full height of the course in which they are used and shall be as broad as possible and of greatest length procurable. All bond or through stones shall be separately stacked before use and the face marked suitably so that they can be identified after having been built into the wall.

9.2.2.1.3 Laying

The stones in the foundations shall be the longest available, shall be laid close to each other and packed in by hand. The front and back stones shall be laid alternately as headers and stretches as far as possible. The stones in the hearting shall be laid interlocking each other. The stones shall break joints with the stones below. The bond stones shall be laid in a line from front face to back overlapping each other by at least 150 mm. The courses shall be built in perpendicular to this pressure which the masonry will bear. In case of battered (such as retaining walls) the beds of stones and the plans on of course shall be laid with their bed at right angles to the battered face.

9.2.2.1.4 Batter

Dry stone walling should not have face batter steeper than 1:12 and until otherwise specified, batter shall be 1:4. The back of the wall shall be vertical; foundations as well as the courses must run at right angles to the face baiter and not horizontally.

9.2.2.1.5 High walls

Dry stone wall higher than 6 metres should be strengthened by laying three consecutive courses of squared rubble masonry coursed in lime or cement mortar at every 3 metres interval.

9.2.2.1.6 Long walls

Where ordered by Executive Engineer, long lengths of dry rubble walls should lie divided into panels separated from one another by short lengths of walls metres long built with squared rubble courses in lime or cement mortar at intervals of say 6 to 9 metres in order to confine damage, if any, only to the panels affected and thereby to minimise the repairs required.

9.2.2.1.7 Weep holes

Weep holes shall be provided in dry stone walling when built against earth or hill slopes subject to saturation by surface or ground water flow. Weep holes shall be backed by coarse gravel and important walls by graded filters composed of coarse sand and gravel. The weep holes shall be as per specification given in the retaining walls.

9.2.2.1.8 Filling

Filling immediately behind dry stone wall must, wherever possible consist of stone refuse or chips or coarse gravel. Clayey and silky soil should not be used, where stone refuse or gravel is available.

9.2.2.2 Dry Polygonal Random Rubble Masonry

9.2.2.2.1 General

In this type of random rubble masonry the face stones are of very irregular shape most of them forming polygons. The stones are used as they come out of the quarry and if sufficient stones with polygonal faces are not forthcoming some of the stones are hammer-dressed to give polygonal faces.

9.2.2.2.2 Laying

Stones are laid to a random arrangement as shown in Fig. 7 (a), care being taken to lay them as close to each other as possible.

9.2.2.2.3 Other respects

In all other respects, the work will conform to specification 9.2.2.1 above for random rubble masonry.

9.2.2.2.4 Two types of works

Polygonal random rubble masonry of this type can either be un coursed (as shown in Fig. 7 (a) or it can be brought up to course by levelling after every 45 to 60 cm vertical interval (as shown in Fig. 7 (b).

9.2.2.3 Uncoursed Rubble Masonry/Random Rubble Polygonal Faced Masonry

9.2.2.3.1 Materials

9.2.2.3.1.1 Stone

Stone shall comply with specifications given in section 9.2.2.1.2 above.

9.2.2.3.1.2 Mortar

The mortar used shall be cement mortar / lime mortar / lime pozzolana mortar / cement lime mortar / lime surkhi mortar of specified proportion or mud mortar. The detailed specification for mortar given under section 8.2.2.5 above shall apply.

9.2.2.3.1.3 Dressing of stones

Stone used for uncoursed or random rubble masonry work shall be hammer dressed on the sides and beds in such a way as to close up with the adjacent stone in the masonry work as strongly as possible. The face stones shall be dressed in such a manner as to give to specified pattern such as polygonal facing etc. The face of stones shall be so dressed that bushing on the exposed face shall not project by more than 40 mm from the general wall surface and on the face to be plastered it shall not project by more than 10 mm nor shall it have depressions more than 10 mm from the average wall surface.

9.2.2.3.2 Laying

9.2.2.3.2.1 All stones shall be sufficiently wetted before laying to prevent absorption of water from mortar. The wall shall be built truly plumb (or true to required batter when so specified). All connected walls in a structure shall normally be raised up uniformly and regularly. However if for any specific reason, one part of the masonry is required to be left behind, the wall shall be raked back at an angle not steeper than 45^0. Toothed joints in masonry shall not be allowed.

The work shall be carried up regularly and masonry on any day will not be raised by more than 1 metre in height.

Stones shall be laid in an uncoursed fashion, or to produce specified pattern such as polygonal facing, random facing etc. However the masonry is required to be brought to level at various stages viz. plinth level, window sill level, lintel level, roof level and any other level specifically shown in the drawing. This may be done by firstly adjusting the laying of stones to one level and then by providing a leveling course of cement concrete 1:6:12 (1 cement : 6 sand : 12 graded stone aggregate of 20mm nominal size) or as otherwise specified in the Contract.

9.2.2.3.2.2 Proper bonding shall be achieved by closely filling in adjacent stones as well as by using bond stones as described herein below. Face stones shall extend back sufficiently and bond well with the masonry. The stones shall be carefully set so as to break joints and avoid formation of vertical joints. The depth of stone from the face of the wall inwards shall not be less than the height or the breadth at the face. The hearting or interior filling of the wall shall consist of rubble stones which may be of any shape. Neither the face stone nor the hearting stone shall be so small as to pass through a circular ring of 150 mm internal diameter in any direction, nor shall any of them have such minimum thickness so as to make it possible to pass it through a rectangular slit of 100 mm width, in any direction.

9.2.2.3.2.3 All stones shall be carefully laid, hammered down by a wooden mallet into position and solidly embedded in mortar, chips and spalls of stone may be used wherever necessary to avoid thick mortar beds or joints, at the same time ensuring that no hollow space is left anywhere in the masonry. The chips used shall not be more than 20% by volume of masonry, and in the case of random rubble masonry or polygonal faced masonry no spalls or chips shall be seen on the exposed face. The hearting shall be laid nearly level with the face stones except that at about one metre intervals, vertical bond stones or plumbs projecting about 150 to 200 mm shall be firmly embedded to form vertical bonding in masonry.

9.2.2.3.2.4 Bond stones

Bond stones or through stones running right across the thickness of the wall shall be provided in walls upto 600 mm thick. In thicker walls two stones overlapping each other by at least 150 mm shall be provided across the thickness of the wall to form bond stones. There shall be at least one bond stone for every 0.5 sqm of wall surfaced. The bond stone shall be marked by a distinguishing letter during construction for subsequent verification and shall be laid staggered in subsequent layers.

9.2.2.3.2.5 Quoins

The quoins or corner stones shall be selected stones neatly dressed with hammer and/or chisel to form the required corner angle laid header and stretcher alternately. The bed and

top surface of quoins shall be chisel dressed to give horizontal joints. The quoins shall have a uniform chisel draft of at least 25 mm width at four edges of each exposed face, all the edges of the same face being in one plane. No quoin stone shall be smaller than 0.025 cum. (25dm^3 in volume) and it shall also not be less than 300 mm in length; 25% of them being not less than 500 mm in length.

9.2.2.3.2.6 Jamb stones

The jambs shall be made with stones specified for quoins except that the stones provided on the jambs shall have their length equal to the thickness of the wall for walls upto 600 mm and a line of headers shall be provided for walls thicker than 600 mm as specified for bond.

9.2.2.3.2.7 Joints

All joints shall be completely filled with mortar and their width shall not exceed 25 mm. When plastering or pointing is not required to be done, the joints shall be struck flush and finished simultaneously while laying the stones. Otherwise the joints shall be raked to a minimum depth of 20 mm by a raking tool during the progress of laying while the mortar is still green.

This type of masonry is illustrated in Fig. 8.

9.2.2.3.3 Scaffolding

Single or double scaffolding shall be used. The scaffolding shall be strong and sound. The holes left in masonry for supporting scaffolding shall be filled and made good before plastering.

9.2.2.3.4 Curing and protection

Green work shall be protected from rains by suitably covering the same. Masonry in cement mortar or composite mortar shall be kept constantly moist on all the faces for a period of at least seven days. The top of masonry shall be flooded at the close of the day. In case of fat lime mortar (with or without Pozzolana) curing shall commence two days after laying of masonry and shall continue for seven days.

9.2.2.4 Coursed Rubble Masonry First Sort/Coursed Rubble Masonry Second Sort

9.2.2.4.1 Materials

Same as for uncoursed rubble masonry/random rubble polygonal faced masonry.

9.2.2.4.2 Dressing of stones

9.2.2.4.2.1 For first sort coursed rubble masonry, face stones shall be hammer dressed so as to give approximately rectangular blocks. They shall be squared on bed and side joints. The bed joints shall be rough chisel dressed for a depth at least 50 mm back from the face, and the side joints shall be so dressed a depth of at least 40 mm back from the face, such that no portion of the dressed surface is more than 6 mm from a straight edge held against the surface. The remaining portions of the respective surfaces shall not project above the chisel dressed bed and side joints. The bushing on the face shall not project by more than 40 mm on an exposed face and 10 mm on a face to be plastered. The hammer dressed stone shall also have a rough tooling for a minimum width of 25 mm along the four edges of the face of the stone.

9.2.2.4.2.2 For second sort coursed rubble masonry the stones shall be dressed as for first sort masonry described above except that no portion of dressed surface shall show a depression of more than 10 mm (as against 6 mm for first sort) from the straight edge placed against the dressed surface.

9.2.2.4.3 Laying

9.2.2.4.3.1 Coursed rubble masonry first sort

All stones shall be wetted before laying the wall shall be built up truly plumb (or to required batter where so specified). All connected masonry in structure shall normally be raised up uniformly and regularly. However, if for any specific reasons one part of wall is required to be left behind such wall shall be raked back at an angle not steeper than 45^0, toothed joints in masonry shall not be allowed. The work shall be carried up regularly and masonry on any day will not be raised by more than 1 metre in height.

All courses shall be laid truly horizontal. The height of course shall not be less than 150 mm nor more than 300 mm. Face stones shall be laid in alternate header and stretcher fashion. They shall be so arranged as to break joints by at least 75 mm. Stones shall be laid with grains horizontal so that the load is transmitted along the direction of their maximum crushing strength. The depth of stone from the face of the fall inwards shall not

be less than the height or breadth. The breadth of a face stone shall also be not less than 150 mm. Each face stone shall be of the same height in any given course. The courses shall be built in perpendicular to the pressure which the masonry will bear. In case of a battered wall (such as retaining walls) the beds of stone and the plane of courses shall be laid with their bed perpendicular to the battered face.

The hearting or the interior filling of the wall shall consist of flat bedded stones carefully laid on their proper beds in mortar, chips, spalls of stones being used where necessary to avoid excessive use of mortar, care being taken to see that no hollow space is left anywhere in the masonry. Chips shall not be used below the hearting stone to bring these upto the level of the face stones. The use of chips shall be restricted to the filling of interstices between the hearting stones but the volume of chips shall be limited to 10% of the total volume of masonry.

9.2.2.4.3.2 Coursed rubble masonry second sort

This type of masonry shall be constructed in the same manner as first sort masonry described above, except that, the use of chips for filling of interstices shall be limited to 15% of the total volume of masonry and that it is permissible to have courses of varying heights. A course may be made up of single stones or two stones.

9.2.2.4.4 Bond stones

Bond stones shall be provided in the same manner as in the case of uncoursed rubble masonry except that in this case there shall be at least one bond stone for every 1.8 m length of every course.

9.2.2.4.5 Quoins

The quoins, which shall be of the same height as the course to which it belongs shall be formed from selected stone of at least 400 mm length. They shall be laid square on beds as stretchers and headers alternately. The beds shall be rough chisel dressed to a depth of at least 100 mm. These stones shall have a minimum uniform chisel draft of 25 mm width at four edges, all the edges being in the same plane. Quoin stone shall not be smaller than 0.025 cum in volume and it shall also be not less than 300 mm in length, 25% of them being not less than 500 mm in length.

9.2.2.4.6 Joints

All bed joints shall be horizontal and all side joints shall be vertical. Face joints shall not be more than 10 mm thick. All joints shall be properly and completely filled with mortar. On faces where no plastering nor pointing is required to be done, the joints shall be struck flush and finished simultaneously while laying the stones. In other cases the joints shall be raked to a minimum depth of 20 mm by a raking tool during the progress of work while the mortar is still green.

This type of masonry is illustrated in Fig. 8.

9.2.2.4.7 Other details

The specification for curing, protection and scaffolding shall be the same as for uncoursed rubble/random rubble masonry described above.

9.2.2.5 Squared Rubble Masonry Coursed (Fig. 9)

9.2.2.5.1 Height of courses

The stones shall be laid in horizontal courses not less than 15 cm in height. All the stones in each course shall be of equal height and all courses of the same height unless otherwise specified in which case no course shall be thicker than any course beneath it. All stones to be set full in metal in all bed or vertical joints.

9.2.2.5.2 Dressing

The face stone shall be squared on all joints and beds by hammer dressing with the help of a mason or waller's hammer. The face of the stone to be hammer-dressed, and 'bushing' not to project more than 40 mm. on an exposed face, nor more than 10 mm on a face that is to be plastered. The beds of stones shall be rough dressed (one line dressed) or hammer dressed true and square for at least 50 mm back from the face, and the joints for atleast 40 mm from the face.

9.2.2.5.3 Joints

All stones shall be set full in mortar along all beds and vertical joints. All beds shall be horizontal and joints vertical. No planings will be allowed on the face. The bees and joints shall not be more than 10 mm in thickness. Along all course, stones shall break joint by atleast half the height of the course.

9.2.2.5.4 Size of stones

No face stone shall be less in breadth than its height, nor shall it tail into the work to a length less than its height. At least one third of the stones shall tail into work at least twice their height, or in walls thicker than 60 cm, three times their height. No stone should tail into a point.

9.2.2.5.5 Through stones

Through stones shall be inserted one metre apart in every course and shall run right through walls not more than 60 cm thick. Where the thickness of wall is more than 60 cm a line of two or more headers or stones shall be laid from face to back, which shall overlap each other by at least 15 cm. Care should be taken not to place the through stones of successive courses over each other.

9.2.2.5.6 Quoins

The quoins which shall be of the same height as the course in which they occur shall be formed of header stones at least 45 cm long, laid lengthwise alternatively along each face. The quoins shall be selected stones more carefully dressed, squared and bedded to a depth of at least 10 cm and laid square on their beds.

9.2.2.5.7 Internal face

The work on the internal face shall be precisely the same as on the exterior face, unless the work is to be plastered in which case, the side joints need not be vertical.

9.2.2.5.8 The interior of the wall shall consist of flat bedded stones carefully laid on their proper beds and solidly bedded in mortar, chips and spalls of stones being wedged in wherever necessary, so as to avoid thick beds or joints of mortar, care being taken that no dry work or hollow spaces shall be left anywhere in the masonry. The external and internal face work shall be brought up evenly, but the hearting should not be leveled up at each course by the use of chips.

9.2.2.5.9 Other respects

In all respects the work must comply with the general specification given in 9.2.1 above for stone masonry.

9.2.2.6 Plain Ashlar Masonry

9.2.2.6.1 The stones shall be of the specified type. It shall be hard, sound, durable and tough free from cracks, decay, weathering, and undesirable particles. The stones shall be in accordance with specifications given in section 9.1.1 above.

9.2.2.6.2 Dressing stones

9.2.2.6.2.1 The stones shall be cut to regular and required size and shape so as to have all faces rectangular, and give perfectly horizontal and vertical joints when laid in the walls. The beds, joints and faces shall be chisel dressed in such manner that all waviness and unevenness is completely removed and a fairly smooth surface is obtained. The face which is to remain exposed in final work, as well as the adjoining faces to a depth of 12 mm, shall be so dressed that no point on the dressed face shall vary by more than 1 mm from 600 mm long straight edge. The top and bottom faces that are to form horizontal joints and the sides which are to form vertical joints shall not show a variation of more than 3 mm when tested with a 600 mm long straight edge. Any vertical face that is to come against backing of masonry shall be so dressed that it shall not show variation of more than 10 mm from a straight edge. All angles and edges that are to remain exposed in the final position shall be true, square and free from chippings.

9.2.2.6.2.2 A sample of dressed stone shall be prepared for approval and shall be kept on the work after approval from the Engineer.

9.2.2.6.3 Laying

9.2.2.6.3.1 Stones shall be wetted, before placing in position. They shall be floated on mortar and bedded properly and solidly in position with a wooden mallet.

9.2.2.6.3.2 The wall shall be built truly vertical (or true to required batter as specified). Stones may be laid in alternate header-stretcher fashion or in any other manner as directed by the Engineer. The headers shall be arranging in such a fashion as to bring them centrally over the stretchers below and above. Stones shall break joints on the face for at least half the height of the course and the bond shall be carried up regularly and masonry any day will not be raised by more than one metre in height.

9.2.2.6.3.3 The height of course in a masonry work shall be uniform and shall not be less than (150mm) unless otherwise specified. The width of stone shall not be less than height.

9.2.2.6.3.4 All connected masonry shall be raised uniformly and regularly throughout but when a break is inevitable the joint shall be made in good long steps to avoid cracks.

9.2.2.6.3.5 When necessary, jib crane or other mechanical appliances shall be used to hoist heavy pieces of stones and place them in correct position. They shall be handled carefully to avoid damage to edges and corners (which are more valuable to damage). No damaged stone shall be allowed to be used in work.

9.2.2.6.3.6 A masonry work may be a composite one consisting of ashlar stone facing with backing of either brick work, uncoursed rubble / coursed rubble masonry, etc. In such cases the two portions shall be carefully bonded. The above specification shall apply to face work and the backing shall be governed, by the appropriate specifications applicable to the type of backing used.

This type of masonry is illustrated in Fig. 8.

9.2.2.6.3.7 Bond stones shall be provided at the rate of not less than one per 1.8 m length in each course. They shall be through stones running across the wall upto 600 mm thick. For thicker walls two stones over lapping each other by not less than 150 mm may be used in conjunction as bond stones. In case of composite masonry (vide 9.2.2.6.3.6 above) the bond stone(s) shall run right across the combined thickness of the wall. Bond stone shall be marked by a distinguishing letter during construction for subsequent verification.

9.2.2.6.3.8 Joints

All joints shall be uniform throughout and not more than 5 mm wide. A uniform recess of 15 mm depth from the face shall be made with the help of a steel plate to receive pointing to be done later.

9.2.2.6.4 Pointing

All exposed joints shall be pointed using mortar with admixture of pigment to match the shade of stone as specified. The pointing when finished shall be sunk from stone face by 5 mm or as specified. The depth of mortar in pointing shall not be less than 10 mm.

9.2.2.6.5 Curing and protection

The masonry shall be cured in the same manner as described in para under uncoursed rubble/random rubble/polygonal faced masonry. The work shall be suitably protected from damage during construction.

9.2.2.6.6 Scaffolding

Double scaffolding shall be adopted. Single scaffolding shall not be allowed. The scaffolding shall be built sufficiently strong and sound keeping in view the heavy load of solid stones and other materials likely to be carried by it.

9.2.2.6.7 Classification

The ashlar masonry can be divided into three classes:

(a) Fine Ashlar: In fine ashlar every stone shall be fine dressed (three line dressing) on all beds, joints and faces, full true and out of winding, if the surfaces are plane, or to uniform curves or twists if required by the design. All stones shall be laid in cement mortar and the beds and joints must not exceed 3 mm in thickness.

(b) Ashlar rough tooled (or bastard ashlar): In this type of ashlar masonry, the faces exposed to view shall have a fine dressed chisel draft 25 mm wide all-round the edges, and be rough tooled (one line dressed) between the drafts, and on all beds and joints. The thickness of joints and beds must not exceed 6 mm. The stones will be set in cement mortar which is specified.

(c) Rock Ashlar, Rustic Ashlar or Quarry-faced Ashlar: This type of masonry is similar to Bastard Ashlar, except that the exposed faces of the stone between the drafts shall be left rough as the stone comes from the quarry. No rock face or bushing may project more than 7.5 cm from plane or drafts. If required for architectural reasons, the drafts may be omitted altogether except on quoins. All the beds and sides of stones shall be rough-tooled (one line dressing). The cement mortar shall be as specified. The beds and joints shall not exceed 6 mm in thickness. Where only ashlar masonry is specified, without indications on the drawings or otherwise, the type of ashlar required will be taken as fine ashlar. As regards size of stones, bond, etc., there is no difference in the three types of ashlar masonry.

9.2.2.7 Punched Ashlar Masonry (Fig. 10)

9.2.2.7.1 Stone

Stone shall be as specified for plain ashlar masonry.

9.2.2.7.2 Dressing

As in plain ashlar masonry except that the faces exposed shall have a fine dressed chisel draft 2.5 cm wide all-round the edges and shall be rough tooled between the drafts, such that the dressed surfaces shall not be more than 3 mm from straight edge placed over it.

9.2.2.7.3 Other details

The specifications for mortar laying, fixing, bond stone, joints, pointing, curing, protection, scaffolding etc. shall be as specified for plain ashlar masonry.

9.2.2.8 Stone Work in Copings, Cornices, Jali, Chowkhats, Lintels, Sills and Roofing etc.

9.2.2.8.1 Stone

Stone used for shelves, copings, cornices, string course, stone jali work, chowkhats etc. shall be of the specified variety and shall be hard, sound, durable and of uniform colour and texture.

9.2.2.8.2 Dressing

All exposed plane surfaces and sides shall be chisel dressed such that the dressed surface shall not vary by more than 1 mm at any point from a 600 mm long straight edge placed against it, except in the case of shelves where a variation of 3 mm shall be allowed. All visible angles and edges shall be free from chippings. The surfaces to be buried in masonry shall be rough chisel dressed. Copings, cornices, chowkhats and sills shall be finished to the shape as shown in the drawing. Jali shall be cut as per the pattern shown in the drawings. Thickness of jali shall be as specified, with a tolerance of 2 mm. Fixing of jali shall be done with adjoining work in grooves, rebates etc. as shown in drawings.

The finished thickness of stone shelves shall be as specified with a permissible tolerance of 2 mm.

9.2.2.8.3 Laying and fixing

Laying and fixing of these items shall be done in cement mortar of specified mix, in the manner shown in the drawing or as directed by the Engineer.

9.2.2.8.4 Other details

Pointing, curing, protection, scaffolding etc. shall be done as specified for plain ashlar masonry work.

9.2.2.8.5 Stone chowkhats

Stone chowkhats for doors, windows and clerestorey windows shall have exposed faces including rebates close picked or three line dressed. The vertical members shall be jointed to horizontal members by mason's mortice and tenon joints and shall be embedded minimum 15 cm deep in floor. Four holes shall be provided to every vertical member of door or window and two to vertical member of clerestorey window for fixing bolts. The projection of the horizontal members shall not be less than 15 cm wide. These shall be well built into the wall at ends. Recesses and holes shall be made in the chowkhats for fixing hinges and bolts staples.

9.2.2.8.6 Lintels, sills and roofing

The stone slabs shall be sawn or split in a plane parallel to the natural bed of the stone obtained from the approved quarry. Thickness of the slab shall be as under:

	Span	**Thickness**
a)	For clear span up to 2 metres.	7.5 to 10 cm.
b)	For clear span exceeding 2 m and up to 2.5 m	Exceeding 10 cm & up to 12.5 cm.

The slabs up to three meters shall be in one piece. The increase in weight of the stone slab after 24 hours soaking in water shall not be more than 10 % of the dry weight.

Stone slabs for roofing shall be soaked in water for 2 hours before use. The width of each slab shall not be less than 25 cm nor more than 35 cm. The slabs shall be self-faced on top and bottom. The edges shall be true and square on the underside and two long edges shall be hammer dressed so that the depression from a 600 mm long straight edge held

against the surface shall not exceed 20 mm and the width of the joint between the two adjoining slabs shall not exceed 25 mm. The joints shall be filled solidly with mortar for their full depth and neatly finished on the underside.

9.2.2.9 Stone Work Sunk or Moulded, Ashlar Moulded and Carved Columns (Fig. 11)

9.2.2.9.1 Materials

Stone used for the work shall be of the specified variety and shall be hard, sound, durable, tough and free from defects like cracks, decay, weathering and undesirable patches. Mortar as specified shall be used. For details, specifications of mortars under section 8.2.2.5 above shall apply.

9.2.2.9.2 Dressing

Every stone shall be cut to the required size and shape and chisel dressed on all beds and joints so as to be free from waviness and unevenness. It shall give a perfectly vertical and horizontal joint with adjacent stones. The dressed surface shall not show variation of more than 3 mm when a straight edge is placed against the surface. The face shall be gauged, cut, chamfered, grooved, rebated, sunk and/or plain moulded as shown in the working drawing. A full sized layout of moulding shall be prepared and a neat template cut facilitate the dressing and cutting of stone to require precise shape and size. All visible angles shall be true and square. The surface and moulding obtained shall be the finest obtainable by the process of chisel dressing.

9.2.2.9.3 For important carved work in columns a full-sized model of the work shall be prepared in Plaster of Paris for the approval of the Engineer, if so directed.

9.2.2.9.4 Other details

The specification for laying and fixing, joints, pointing, curing, protection and scaffolding shall be the same as that of stone work in plain ashlar masonry.

9.2.2.10 Dressing of Stones

9.2.2.10.1 General

Stone shall be cut and dressed as soon after quarrying as possible. Stone required for masonry shall be dressed as specified or shown on the drawings. Main types of dressing are prescribed in the following paragraphs. Stones shall be dressed accurately to the exact size shown in the drawings or according to specifications of the masonry work. All visible edges shall be free from chippings. For complete detail of dressing of stones, reference may be made to IS: 1129 (Dressing of stones Revised from time to time).

9.2.2.10.2 Scabbed stones

Scabbed stone means quarried stone in which irregular angles have been taken off with the scabbing hammer, usually done at quarry.

9.2.2.10.3 Hammer dressed stone

When the scabbed stone is dressed with mason's hammer or waller's hammer to make the faces square and to remove unnecessary bushing, it is called hammer dressed stones. No picking or chiseling is used in this type of dressing.

9.2.2.10.4 Rough tooled stone

The rough tooled stone is also called one line dressed stone. It is dressed with a chisel, or sparrow picked until no portion of the dressed surface is more than 6 mm from a straight edge placed on it.

9.2.2.10.5 Chisel dressed stone

Chisel dressed stone is also called "two-line dressed" stone. It is dressed with chisel or sparrow picked until no portion of the surface dressed is more than 6mm from a straight edge placed on it.

9.2.2.10.6 Fine dressed stone

This is also called "three-line dressed" stone. By fine dressing or three line dressing is meant, the best surface which can be given to a stone with chisel, and without rubbing. The straight edge laid along the face of the stone so dressed must be in contact with the stone at every point.

9.2.2.10.7 Finely punched stone

This type of stone means stone having face work to an approximately true surface by means of pointed tools or punch giving a dotted appearance usually specified to give architectural effect.

9.2.2.10.8 Cut stone work

Every stone for cut stone work shall be fine-tooled on all faces to exact shape specified in design. Templates made of zinc sheets shall be used to dress to correct shapes.

9.2.2.10.9 Sawing and polishing

Certain building stones like marbles shall be sawn in blocks wherever so specified and certain stones like granite and marble shall be polished with a stone polishing machine, if so specified. Sand blasting may sometimes be prescribed as a finishing process for building stones.

9.2.2.11 Ashlar Masonry with Sand Stone

9.2.2.11.1 Stone lining upto 8 cm shall be treated as veneer work and the lining of greater thickness as plain ashlar masonry. All specifications as given in ashlar masonry shall be applicable to ashlar masonry with sand stone. Stone used shall conform to specification given in section 9.1.1 above.

9.2.2.12 Stone Work in Arches and Domes

9.2.2.12.1 Materials

Stone used for the work shall be of the specified variety and shall be hard, sound, durable, tough and free from defects like cracks, decay, weathering and undesirable patches. Stone .used shall conform to specifications given in section 9.1.1 above.

9.2.2.12.2 Dressing

Every stone shall be cut to the required wedge-shape and size and chisel dressed on all beds and joints so as to be free from waviness and unevenness. Each stone shall give a truly radial and straight joint with the adjoining stone, as shown in the drawing. No point on the dressed surface shall be more than 3 mm from a 600 mm long straight edge placed against it. The faces shall be gauged, cut, chamfered, grooved, rebated, sunk and/or moulded to uniform curves or planes as shown in the working drawings. A full sized layout of each unit of stone shall be prepared and a neat template cut to facilitate cutting of the stones to the required precise shape and size. All visible edges and angles shall be true neat and free from chippings. The exposed surface shall be dressed to give a finest possible finish obtainable by the process of chiselling. At the exposed joints a width of 12 mm back from the face shall be fine tooled so that the straight edge laid along it shall make a contact with a variation of not more than 1 mm.

9.2.2.12.3 Centring and shuttering

Centring, shuttering and false work required for the arch or dome work shall be strong and unyielding. It shall not sag or deform under load. It shall be got approved from the Engineer before putting up stone work.

9.2.2.12.4 Other details

Other details regarding laying, joints, pointing, curing protection and scaffolding shall be the same as for stone work in plain ashlar masonry. Stone work in arches and domes is illustrated in Fig. 12).

9.2.2.13 Stone Work in Wall Lining etc. (Veneer Work)

9.2.2.13.1 Material

Stone shall be of the specified variety (such as red/white sand stone, trap stone etc.) and shall be obtained from approved quarry. It shall be hard, sound, durable and free from defects like cavities cracks, sand holes, flaws, injurious veins, patches of loose or soft material etc. Percentage of water absorption shall not exceed 5 percent when tested in accordance with IS: 1124-1974. The stones shall be cut into slabs of required thickness along the planes parallel to the bed or natural grains of the stone. The stone used shall conform to specifications in section 9.1.1 above.

Mortar for fixing shall be as specified.

9.2.2.13.2 Dressing

The face of the stone slabs as well as the sides shall be chisel dressed in such a way that a smooth surface free from waviness and unevenness is obtained. A straight edge 600 mm long, when held against the dressed face or side shall not show a variation of more than 1 mm. The edges and corners shall be True Square and free from chippings. The back of the slab shall be so dressed as to give a rough surface which shall however be free from projection and waviness. The thickness of stone slab after dressing shall be of the specified thickness within the tolerance limit of + 2mm.

9.2.2.13.3 Laying and fixing

The stone slabs shall be sufficiently wetted before laying to prevent absorption of water from mortar. They shall then be fixed with mortar in position without use of chips or pinning of any sort. Where so specified the adjoining stones shall be secured to each other by means of copper pins 75 mm long and 6 mm dia. See Fig. 13.

The slabs shall also be secured to the backing masonry work, if so specified, by means of 25 mm x 6 mm gun metal cramps 30 cm long or other size. The fixing arrangement is shown in Fig. 13. Alternatively the stones may be secured to the backing by means of stone dowels 100 mm x 50 mm x 25 mm as shown in Fig. 14.

Pins, cramps and dowels shall be got approved before use. They shall be fixed using cement mortar 1:2 (1 cement : 2 coarse sand).

9.2.2.13.4 The face work and backing masonry shall be built up together. However in the case of backing of reinforced cement concrete the face stones shall be secured to the backing after it has set and got cured. The cramps shall be fixed in concrete at the required positions while concreting. The face stones shall be laid in regular courses not less than 20 cm in height and all the courses shall be of the same height unless otherwise specified in the drawing. The size of each stone and pattern of joints shall be as specified in the drawing.

9.2.2.13.5 Joints

All joints shall be full of mortar. Special case shall be taken to see that the joint between centre of the mass being compacted at the time of the depositing proceeds by means of a suitable type the facing stone slabs and the back masonry is properly filled with mortar. The hollowness behind the veneer stone slab or post joining the back masonry can be detected by tapping the face stone and any such defective work shall be rectified by relaying the stone slabs. The thickness of the face joints shall not exceed 5 mm. The face joints shall be uniform throughout. A 15 mm deep recess shall be formed with the help of a steel plate while the mortar is green.

9.2.2.13.6 Other details

Specification for pointing, curing, protection and scaffolding shall be the same as for stone work in plain ashlar work.

9.2.2.14 Miscellaneous Items

9.2.2.14.1 Stone chajja

9.2.2.14.1.1 Stone slabs

Stone slabs shall be of specified variety and shall be hard, sound and durable. They shall be chisel dressed on all faces which are exposed to view and rough dressed at other surfaces. Angles shall be true and edge lines straight. The finished thickness shall be stipulated with a permissible tolerance of 2 mm. The length of stone slabs shall not be less than 60 cm unless otherwise specified.

9.2.2.14.1.2 Sloping chajja

The slope, projection etc. shall be as indicated in drawing. The bearing on the wall being similarly sloped. The chajja shall have a minimum bearing of 20 cm on the wall, measured horizontally. Each slab shall be anchored down by means of a steel bar 12 mm in diameter and 450 mm long, the lower end being bent for fixing into the masonry joint. The steel bar shall pass through the hole drilled in the centre of the bearing of the stone slab.

9.2.2.14.1.3 Horizontal chajja

The stone shall be fixed horizontally with a slight outer slope of about 1:20. Holding down bolt shall be provided where so specified. The stone chajja shall have a minimum bearing of 20 cm.

9.2.2.14.1.4 Other details

The specification for curing, protection, scaffolding, pointing etc. shall be the same as for stone work in plain ashlar masonry and/or as specified in the item of work.

9.2.2.14.2 Retaining walls

Retaining walls shall be constructed as per instructions issued from time to time.

9.2.3 Measurements

9.2.3.1 General

(a) All work shall be measured on the basis of finished dimensions and measured net, except where otherwise specified (herein below).

(b) The lengths, breadths and heights of stone work shall be measured correct to a cm. Only specified dimension shall be allowed. Anything extra shall be ignored.

(c) Work under the following categories shall be measured separately, unless otherwise specified:

a) From foundations to plinth level.

b) Super-structure above plinth level and upto floor two level.

c) Above floor two level of super-structure.

d) Square or rectangular pillars.

e) Circular pillars.

f) Curved on plan for mean radius not exceeding 6 mtrs.

g) Stone work sunk or moulded in cornices, square, rectangular and circular pillars.

h) Dressing of stone.

i) In or under water and/or liquid mud.

j) In or under foul conditions.

k) Stone work on the parapet shall be measured together with the corresponding item of stone work in the storey next below.

(d) No deduction shall be made, not extra payment made for the following:

i) Ends of joints, beams posts, girders, rafters, purlins, trusses, corbels etc. each upto 500 sq. cm. in section.

ii) Openings each up to 0.1 sqm ($10dm^2$).

iii) Wall plates and bed plates, bearings of chajjas and the like upto 10 cm depth (Note: The bearings of door and roof slabs shall be deducted from masonry).

iv) Drain holes and recesses for cement concrete blocks to embed holdfasts for doors, windows etc.

v) Building in the masonry iron fixtures pipes upto 309 mm dia., holdfasts of doors and windows.

vi) Forming chases in masonry upto Section of 350 sqcm.

(e) Stone masonry in chimney breasts, chimney stacks, smoke flues, or air flues up to 0.25 sqm (25 dm2) in sectional area, shall be measured as solid and no extra payment shall be made for pargeting and casing such flues. Where flues exceed 0.25 sqm in sectional area, deduction shall be made for the flue opening and pargeting and casing of flues shall be paid for separately.

(f) Apertures for fireplaces shall not be deducted and extra labour for splaying of jambs, throating and making arch to support opening shall not be paid for separately.

(g) Plinth level: For purpose of measurements for masonry in plinth and foundation and (or masonry in superstructure, the plinth level shall be determined as under:

i) For Building: Ground floor level or 1.5 metres above ground level whichever is lower.

ii) For abutments, piers and retaining walls of culverts, walls of reservoirs basement and the like 1.5 metres above the ground level shall be as marked in the drawings.

(h) Curved masonry: Stone masonry curved on plan to a mean radius exceeding 6 m shall be measured under stone work in walls of the appropriate category.

9.2.3.2 Individual Items of Work

9.2.3.2.1 Uncoursed rubble masonry / polygonal faced masonry / random rubble masonry (second sort) / pillars (columns) / curved stone work

(a) The finished work shall be measured net in cubic metres nearest to two places of decimal.

(b) Square rectangular pillars shall be measured as walls, under the respective category but extra payment shall be allowed for these over the rate for corresponding stone work in wall. A rectangular pillar shall mean a detached masonry portion rectangular in section such that its breadth does not exceed two and a half times its thickness.

(c) Circular pillars shall be measured net as per actual finished work under the respective category of masonry wall but extra payment shall be allowed for these over the rate for the corresponding stone work in walls.

(d) Curved stone work having a mean radius not exceeding 6 m on plan shall be measured net as per actual finished work under the respective category of masonry wall, but extra payment shall be allowed for this over the rate for the corresponding stone work in walls.

(e) Provisions as given under "General" shall apply.

9.2.3.2.2 Stone work in plain ashlar masonry / ordinary pillars (columns) / moulded and curved columns / curved stone wall

(a) The finished work shall be measured in cubic metre nearest to two places of decimals.

(b) Square, rectangular pillars shall be measured net as per actual finished work and included in the quantity of masonry wall, but extra payment shall be allowed for these over the rate for corresponding stone work in wall. A rectangular pillar shall mean a detached masonry portion rectangular in section such that its breadth does not exceed three times its thickness and the thickness itself does not exceed 60 cm.

(c) Curved stone work having a mean radius not exceeding 6 m on plan shall be measured net as per actual finished work under the appropriate category of masonry wall, but extra payment shall be allowed for this over the rate for corresponding stone work in wall.

(d) In case of battered or curved or curved surface (other than curved columns) the dimensions of the circumscribing rectangles of the dressed stone used in the work shall be measured. In such cases the measurement shall be taken, course by course or stone by stone as the case may be.

(e) Provision as given under "General" shall apply.

9.2.3.2.3 Stone work sunk or moulded

(a) The finished work shall be measured in cubic metres nearest to two places of decimals. The dimensions of the circumscribing rectangles of the dressed stone used in the work shall be measured correct to a cm. Measurement shall be taken course by course or stone by stone as the case may be. Only specified dimensions shall be allowed, anything extra being ignored.

9.2.3.2.4 Stone work in arches and domes

The finished work shall be measured net in cubic metres nearest to two places of decimals. Any recognized Engineering formula shall be used for calculating the volume of the work.

For arches exceeding 6 m in span extra payment for additional cost of labour and hire charges in respect of centring shall be made on the basis of arches, area of the soffit including strutting, wedging, casing, striking and removal.

Only specified dimension shall be allowed, anything done extra being ignored.

9.2.3.2.5 Stone work for wall lining etc. (veneer work)

(a) The finished work shall be measured in square metre nearest to two places of decimals. In case of plain slabs of geometrical shape other than square or rectangular, or plain slabs of irregular shape, the dimension of the circumscribing rectangle of the dressed slabs used in the work shall be measured. The veneering work curved in plan shall be measured as plain work but extra payment shall be allowed for radius not exceeding 6 m on external face. For radius beyond 6 m on plan the work shall be measured as plain work only, even when the face may have to be dressed to curve. Length and breadth shall be measured correct to a cm.

9.2.3.2.6 Stone work in shelves, coping, cornices, jali etc.

(a) The finished stone shelves shall be measured net in square metres nearest to two places of decimals. The length and breadth including the bearings shall be measured correct to a cm.

(b) Stone jali shall be measured in square metres nearest to two places of decimals. The net dimensions of the jali including the portion grooved into the adjusting work shall be measured.

(c) Stone copings shall be measured in cum nearest to two places of decimals. The dimensions of the circumscribing rectangles of the dressed stone used in the work shall be measured correct to a cm.

(d) Plain cornices, string course and plinth courses shall be measured in cum nearest to two places of decimals. Length, breadth and depth of finished stones as used in the work shall be measured including bearing, correct to a cm.

(e) Moulded cornices shall be measured in cubic metre under moulded stone work.

(f) No deduction shall be made from the masonry wall for the bearing of stone shelves.

9.2.3.2.7 Stone chajja

The actual area of chajja including bearing shall be measured in square metres nearest to two places of decimal.

9.2.3.2.8 Retaining walls

These shall be measured as per Clause 9.2.3.1 above.

9.2.4 Rate

The rate for various items shall include the cost of materials and labour required for proper completion of item of works as described in the respective nomenclature in accordance with the schedule and specifications above including temporary erection like scaffolding etc. unless otherwise specified.

The rate includes all such items as mentioned in the general specifications of the stone work. Contractor's profit @ 10% and over-head charges @ 5% have also been included in the rate.

9.3 Stone Soling

9.3.1 General

Soling shall be constructed on the prepared sub-grade in conformity with lines, grades, thickness and cross-section shown on drawings or as indicated by Engineer.

9.3.2 Marking out

The edges of soling shall be marked out by strings and stakes. The lines shall be carefully ranged.

9.3.3 Laying and Packing

The soling stones shall be hand packed carefully to the required chambers of the top surface by laying correct to the templates placed 15 m apart. These shall be laid resting on their broad bases with their height equal to the thickness of the soling and the largest dimension at right angles to the centre line of the road. Stones shall be laid breaking joints in close contact with each other but not leaning against each other. Large size stones shall be arranged at the edges and the centre of the road. The joints shall be staggered. All interstices between soling stones shall be wedged in by smaller stones of suitable size well driven in by crow bars and hammers to ensure tight packing and complete filling of interstices. The wedging shall be carried out simultaneously with the placing in position of soling stone and shall not lag behind. After the hand packing has been completed, inequalities in the surface shall be checked by templates and carefully set right.

9.3.4 Consolidation

The soling shall be consolidated by a road roller of 8 to 12 tonne as directed by Engineer, depending upon the type of soling stones and the nature of the sub-grade. Rolling shall progress from edges towards the centre, parallel to the centre line. Rolling shall be continued till a closely knit surface is obtained. The surface shall be again checked by templates, hollows corrected with spalls, and consolidated.

10. BRICK WORK

10.1 General Specifications for First Class Brick Work

10.1.1 Materials

10.1.1.1 Bricks & tiles

Unless otherwise specified, brick work shall consist of 1st class brick laid in specified mortar. The bricks used for brick work and the size of brick and tiles and relevant classification shall be as per specifications given below.

10.1.1.1.1 Sizes of Bricks

Unless otherwise specified bricks required for buildings or architectural works shall measure 19 cm x 9 cm x 9 cm (actual) or 20 cm x 10 cm x 10 cm (nominal) so that every 10 courses when laid with horizontal mortar joints shall measure one metre in height. A tolerance upto 6.5 mm in length, ± 3 mm in width and + 3mm in height shall be permitted. This tolerance for size shall be measured as explained in detail in testing of bricks section (i) below.

Testing of Bricks

The sample of bricks shall be taken, so that they form a fairly good representative of the entire number of bricks, which are required to be tested. A sample of 50 bricks shall be taken from every consignment of 50,000 bricks or part thereof. The samples can be taken from either of the two methods:

a) *Sampling bricks in motion:* In this method, samples can be taken when the bricks are in motion i.e. while they are being loaded or unloaded, effort being made to collect the samples at regular intervals so as to get a representative sample of the whole quantity.

b) *Sampling bricks from a stack:* In this method, the bricks are taken out at random from a stack of bricks. Number of bricks required shall be taken from across the top of stack, the sides accessible & from the interior of the stack by opening trenches from the top.

The samples taken by either of the two methods shall be stored in a dry place until these are required for the tests. Whenever, tests are to be carried out, bricks shall be taken at random from the sample.

(i) Test of Dimensions of Bricks

a) *Metric Bricks:* Twenty whole bricks shall be selected at random from the sample selected as described above. All blisters, loose particles of clay and small projections shall be removed. They shall then be arranged upon a level surface in contact with each other and in a straight line. The overall length of the assembled bricks shall be measured with a steel tape or other suitable inextensible measure sufficiently long to measure the whole row one stretch. Measurement by repeated application of a short rule or measure shall not be permitted. If for any reason it is found impracticable to measure 20 bricks in one row, the sample may be divided into two rows of 10 bricks, which shall be measured separately to the nearest millimeters. All these dimensions shall be added together.

The dimensions of bricks when tested in accordance with the above procedure shall be within the following limits:

Length	367.0 cm to 393.0 cm
Width & Height	174.0 cm to 186.0 cm

b) *Non-metric Bricks:* The test will be carried out exactly in the same manner as described for metric bricks but only 16 bricks shall be used. Their dimensions when, tested in accordance with above procedure shall be within the following limits:

Length	140 inches to 148 inches
Width	68 inches to 72 inches
Height	47 inches to 51 inches

Every brick shall be provided with a frog of the size 10 cm x 4 cm x 1 cm. The corners of the frog may in certain cases be rounded off with a radius of 2 cm.

The bricks used shall be of the specified class and size. The nominal and actual sizes of different categories of bricks and brick tiles shall be as under:

S. No.	Types of Bricks	Nominal Size	Actual Size
i)	Modular bricks	20x10x10 cm	19x9x9 cm
ii)	Modular brick tiles	20x10x 5 cm	19x9x4 cm
iii)	Conventional FPS bricks	9"x4-1/2"x3"	9" x 4-3/8" x 2-3/4"
iv)	Conventional FPS bricks tiles	9" x 4-1/2" x 2"	9" x 4-3/8" x 1-3/4"
v)	FPS large size bricks	10" x 5" x 3"	10" x 4-7/8" x 3"
vi)	FPS large size bricks tile	10" x 5" x 2"	10" x 4" x 2"

The permitted tolerance in sizes for bricks of Class 'I' is ± 3% and Class 'II' is ± 8%.

10.1.1.1.2 Classification

Bricks shall be classified as follows:

10.1.1.1.2.1 First Class Bricks

The first class bricks shall conform to the following specifications:

(a) The size of bricks shall be as specified subject to the tolerance mentioned in 10.1.1.1.1 above.

(b) They shall be made from good brick earth, free from saline deposits and shall be sand moulded.

(c) They shall be thoroughly burnt without being vitrified and shall have uniform deep red, cherry or copper colour.

(d) They shall be regular and uniform in shape and size with sharp and square arises and parallel faces.

(e) They must be homogenous in texture and emit a clear ringing sound on being struck.

(f) They shall be free from flaws, cracks, chips, stones nodules or lime or Kankar and other blemishes.

(g) A first class brick shall not absorb water more than 20% of its own dry weight after 24 hours immersion in cold water.

Details of this test are given in testing of bricks section (ii) below.

(ii) Test for Determination of Water Absorption of Bricks

a) *Laboratory Test:* The test specimens shall consist of five whole bricks selected at random from the sample of brick obtained as already described in testing of bricks section above.

Apparatus: The apparatus shall consist of a balance sensitive of within 0.1 percent of the weight of the specimen.

Procedure: The test specimen shall be dried to constant weight in a ventilated over at 110° C to 115° C. If the specimen is known to be relatively dry, this may normally be accomplished in 48 hours but if the specimen is wet, several additional hours may be required to attain constant weight. The specimen shall then be cooled approximately to room temperature and weighed. In a ventilated room, bricks properly separated require four hours for cooling, unless an electric fan passes air over them continuously, in which case two hours may suffice. Specimens noticeably warm to the touch shall not be used for the absorption test. The dry specimens shall be completely immersed without preliminary partial immersion, in clean water at 15.5° C to 30° C for 24 hours. Each specimen shall then be removed, the surface water wiped off with a damp cloth and the specimen weighed. Weighing anyone specimen shall be completed within three minutes after removing the specimen from the water.

Evaluation and report of test: The percentage of water absorption by weight shall be calculated as:

Water absorption, percentage by weight = ((W2 – W1)/W1) x 100

where,

W1 = Weight of dry specimen, and

W2 = Weight after soaking in water.

The average value of the five specimens shall be taken as the water absorption of the lot.

b) *Field Test:* The test specimen shall consist of five whole dry bricks and shall be selected at random from the simple obtained as already described in testing of bricks section above.

Apparatus: The apparatus shall consist of a balance sensitive of within 0.2 to 0.3 percent of the weight of the specimen.

Procedure: The test specimen shall be weighed and shall then be completely immersed in clean water at room temperature and allowed to remain in this state for a period of 24 hours: The specimen shall then be taken out, wiped with a damp cloth and then weighed immediately.

Evaluation: The % of water absorption by weights shall be calculated as follows:

Absorption, percent by weight after 24 hour's water immersion = 100 x (b-a)/a, where,

a = Weight of the dry specimen, and

b = Weight of the specimen after 24 hours immersion in cold water.

(h) The first class bricks shall have a minimum crushing strength of 105 kg per sqcm when tested according to the test prescribed in testing of bricks section (iv) below. The

crushing strength of any individual brick shall not fall below the average crushing strength by more than 20 percent.

(i) First class bricks shall not show appreciable signs of efflorescence either in dry state or subsequent to soaking in water as detailed in testing of bricks section (iii) below.

(iii) Test for Determination of Efflorescence of Bricks

a) *Laboratory Test:* Not less than five dry bricks shall be selected at random from the sample of bricks obtained as already described in testing of bricks section above.

Procedure: Each brick shall be placed on end in a shallow flat bottom dish containing distilled water, the depth of immersion of the brick being not less than 2.5 cm. The whole arrangement shall be allowed to stand in a warm (e.g. 18° C to 30° C) and well ventilated room until all the water in the dish evaporated. When the water has been absorbed and the bricks appear to be dry a similar quantity of distilled water shall again be placed in the dishes and same allowed to evaporate as before. At the end of .this period, the bricks shall be examined for efflorescence.

Report of *Test Results:* The liability to efflorescence shall be reported as 'nil', 'slight', 'moderate', 'heavy' or 'serious', in accordance with the following definitions:

(a) Nil: When there is no perceptible deposit of efflorescence,

(b) Slight: When not more than 10 percent of area of the brick is covered with a thin deposit of salts,

(c) Moderate: When there is a heavier deposit that under 'slight' and covering upto 50 percent of the area of the brick surface but unaccompanied by powdering or flaking of the surface,

(d) Heavy: When there is a heavy deposit of salts covering 50 percent or more of the brick surface but unaccompanied by powdering or flaking of the surface, and

(e) Serious: When there is a heavy deposit of salts accompanied by powdering and/or flaking of the surfaces and tending to increase with repeated wettings of the specimen.

b) *Field Test for Efflorescence:* Five bricks shall be selected at random from the sample of bricks obtained as already described in testing of bricks section above.

Procedure: Each brick shall be placed on end in a shallow dish containing clean potable water. The quantity of water in the dish shall be such that the brick is immersed to a depth of not less than 2.5 cm. The brick shall be allowed to stand in this position for a few days under atmospheric conditions and room temperature until all the water in the dish is evaporated, When the water has been absorbed and the bricks appear to be dry, a similar quantity of clean potable water shall he placed in the dishes and the same allowed to evaporate as before. At the end of this period, the bricks shall be examined for efflorescence.

Report: The liability to efflorescence shall be reported as 'nil', 'slight', 'moderate', 'heavy' or 'serious' in accordance with the definition given above.

(iv) Test for Determination of Compressive Strength of Bricks

Sampling: Five whole bricks shall be selected at random from the sample of bricks obtained as already described in testing of bricks section above.

Procedure: The bricks shall be immersed in water at 25° C to 29° C for 24 hours. They shall then be removed and allowed to drain at room temperature for about five minutes and wiped free from surplus moisture. Their frogs shall be filled with mortar composed of one part Portland cement and one and a half parts clean, coarse sand graded to 0.3 cm and down. The bricks shall then be stored under damp sacks for 24 hours. After the expiry of this period, they shall be immersed in water for seven days.

At the end of seven days, the samples of bricks shall be taken out, wiped dry and placed with the flat surfaces horizontal and the mortar filled face upwards between 2 three-plywood sheets each, approximately 0.3 cm thick and carefully centered between the plates of the compression testing machine. The compression plate of the testing machine shall have a bell-seating in the form of a portion of a sphere, the centre of which coincides with the centre of the face of the plate. The load shall be applied axially at the uniform rate of approximately 140 kg per sqcm per minute until failure occurs.

Evaluation and Report of Test: The maximum load at failure divided by the area of bricks shall be taken as the compressive strength.

The arithmetic mean of the compressive strength of the five bricks tested shall be taken as the compressive strength of the lot. The compressive strength of the bricks shall be expressed in kg per sqcm.

10.1.1.1.2.2 Second Class Bricks

Second class bricks shall conform to the following specifications:

(a) They shall be as well burnt as first class bricks or slightly over-burnt, but not vitrified in any part.

(b) They must give a clear ringing sound when struck.

(c) They may have slight irregularities in size, shape and colour provided these irregularities are not such as to give uneven courses when used for construction.

(d) They may have slight chips, flaws or surface cracks but must be free from lime or Kankar nodules, and be homogenous in texture.

(e) The minimum crushing strength of second class brick shall be 70 kg per sqcm when tested according to the test prescribed in testing of bricks section (iv) above. The crushing strength of an individual brick shall not fall below the average strength by more than 20%.

(f) They shall not show any appreciable sign of efflorescence either in dry state or subsequent, to soaking in water as per test prescribed in testing of bricks section (iii) above.

10.1.1.1.2.3 Brick Tiles

10.1.1.1.2.3.1 Flat brick tiles

Flat brick tiles shall conform to all the detailed specifications for first class bricks except that no frogs shall be provided unless specifically ordered by the Engineer. Tiles shall be made to the following dimensions:

S. N.	Description	Size of metric tiles
(a)	Tiles for 1st class mud roofing.	29x14x3 cm
(b)	Tiles for 2nd class mud roofing and for flooring and canal lining.	29x14x 5 cm
(c)	Tiles for flooring, tile-facing and tile-brick masonry.	19x9x 4 cm
(d)	Permissible tolerance in sizes.	± 6.5 mm for length ± 3 mm for width ± 1.5 mm for thickness

10.1.1.1.2.3.2 Tiles may be machine-moulded if so, specified by the Engineer at the time of calling tenders. Where nothing specific is mentioned, tiles will mean hand-moulded tiles.

10.1.1.1.3 Storage

Bricks shall not be dumped at site. They shall be stacked in regular tiers as they are unloaded, to minimise breakage and defacement. The supply of bricks shall be so arranged that, as far as possible, atleast two days requirements of bricks are available at site at any time. Bricks selected for use in different situations shall be stacked separately.

10.1.1.2 Mortars

Mortar of specified proportions shall be used for brick work and shall comply with specifications as given in the section 8.2.2.5 above.

10.1.1.3 Sand

The sand used for brick work shall comply with specification given in section 8.1.2.2.2 above.

10.1.1.4 Bitumen

The bitumen used for brick work shall comply with specification given in section 8.2.2.6 above.

10.1.1.5 Water

Water used for brick work shall comply with specification given in section 8.1.2.3 above.

10.1.2 Soaking

Bricks required for brickwork in cement or lime mortars, shall be thoroughly soaked in clean water immediately before use for one hour or till the complete cessation of air bubbles whichever is later, in brick-lined or steel tanks of sufficient size. Bricks shall be place in the tank by hand, one at a time, and not thrown or tipped in. The soaked bricks

shall be kept on wooden planks or brick platforms to avoid earth being smeared on them. Bricks need not to soaked for brickwork in mud mortar.

10.1.3 Laying

10.1.3.1 Brick work shall be laid in English Bond (Fig. 15) unless otherwise specified with frogs upwards. Half or cut bricks shall not be used except where necessary to complete the bond. Closers in such cases, shall be cut to the required size and used near the ends of the walls.

10.1.3.2 In exposed brick work, selected bricks of the specified class shall be used for the face work.

10.1.3.3 A layer of mortar shall be spread on full width over a suitable length of the lower course. Each brick shall be properly bedded and set home (in position) by gently tapping with handle of trowel or wooden mallet. Its inside faces shall be buttered with mortar before the next brick is laid and pressed against it. On completion of a course, all vertical joints shall be fully filled from the top with mortar.

10.1.3.4 The walls shall be taken up truly plumb. All courses shall be laid truly horizontal and vertical joints shall be truly vertical. Vertical joints in alternative courses shall come directly one over the other. Thickness of brick courses shall be kept uniform and for this purpose wooden straight edge with graduations indicating thickness of each course including joint shall be used. The height of window sills, bottom of lintels and other such important points in the heights of the wall shall be marked on the graduated straightedge.

10.1.3.5 Both the faces of walls of thickness more than one brick length shall be kept in proper plane. All connected brick work shall be carried up simultaneously and no portion of work shall be left more than one metre below the rest of the work. Where this is not possible, in the opinion of the Engineer, the work shall be raked back according to bound (and not toothed) at an angle steeper than 45^0. The work done per day should not be more than one meter height.

10.1.3.6 All iron fixtures, pipes, outlets of water, hold-fasts of doors and windows, which are required to be built up into the walls shall be embedded in mortar or cement concrete as specified in their correct position, as directed by the Engineer, as the work proceeds.

10.1.3.7 The flue of the chimney shall be pargeted i.e. plastered with mud gober (cow dung) mortar [3 mud : 1 gober (cow dung)] as the work proceeds. Nothing extra shall be paid for this pargetting.

10.1.4 Joints

All horizontal joints shall be parallel and, unless otherwise specified, truly level. All vertical joints shall be truly vertical and shall come directly over one another in alternate courses. The vertical joints shall also in every other course be perpendicularly in line on the internal as well as the external face. The thickness of joints shall be as follows:

Non Metric Bricks	Metric Brocks
Thickness of joints shall be ¼ inch and shall not exceed $^3/_8$ inch. The height of four courses (and four joints) as laid, shall not exceed by more than 1¼" the height of four bricks as piled dry one upon the other. For exposed brickwork, wherever so specified, the mortar bed joints will be $^5/_{16}$ inch thick and vertical joints ¼ inch thick, brickwork in four courses including four bed joints to rise 12 inches.	Thickness of joints shall be 8 mm and shall not exceed 12 mm. The height of five courses (and five joints) as laid, shall not exceed by more than 5 cm the height of five bricks as piled dry one upon the other. The thickness of joints shall be regulated so that height of five courses with five joints to rise 50 cm.

10.1.5 Scaffolding

For all exposed brick work or tile work, double scaffolding having two sets of vertical supports shall be provided. The supports shall be sound and strong, tied together with horizontal pieces over which scaffolding planks shall be fixed.

For all other brick work in building, single scaffolding shall be permitted. In such cases, the inner end of the horizontal scaffolding pole shall rest in a hole provided only in the header course for the purpose. Only one header for each pole shall be left out. Such holes for scaffolding shall, however not be allowed in pillars/columns less than metre in width, or immediately near the skew backs of arches. The holes left in masonry works for scaffolding purposes shall be filled and made good before plastering.

Note: In case of special type of brick work, scaffolding shall be got approved from Engineer in advance.

10.1.6 Condition of equipment

All equipments used for making or transporting mortar and bricks shall be clean and free from set mortar, dirt or other injurious foreign substances.

10.1.7 Curing

Brick work shall be protected from rain by suitable covering when the mortar is green. Masonry work in cement mortar, composite lime mortar, lime mortar (lime of category other than C&D) shall be kept constantly moist on all faces for a minimum period of seven days. Brick work carried out during the day shall be suitably marked indicating the date on which the work is done so as to keep a watch on the curing period. In case of masonry with fat lime mortar curing shall commence two days after laying masonry and shall be protected during construction from rain or uneven drying. No curing is required for Brick work in Mud mortar.

10.1.8 Finishing

10.1.8.1 General

The surfaces can be finished by 'Jointing' or 'Pointing' or by 'Plastering' as given on the drawings.

For a surface which is to be subsequently plastered or pointed, the joints shall be squarely raked out to a depth of 15 mm while the mortar is still green. The raked joints shall be well brushed to remove dust and loose particles and the surface shall be thoroughly washed with water, cleaned and wetted.

10.1.8.2 Jointing

In jointing, the face joints of the mortar shall be worked out while still green to give a finished surface flush with the face of the brick work. The faces of brickwork shall be cleaned to remove any splashes of mortar during the course of raising the brick work.

10.1.8.3 Pointing

For pointing, the mortar shall be filled and pressed into the raked out joints, before giving the required finish. The pointing shall then be finished to proper type given on the drawings. If type of pointing is not mentioned on the drawing the same shall be ruled pointing. For ruled pointing after the mortar has been filled and pressed into the joints and finished off level with the edges of the bricks, it shall while still green be ruled along the centre with a half round tool of such width as may be specified by the Engineer. The superfluous mortar shall then be cut off from the edges of the lines and the surface of the masonry shall also be cleared of all mortar.

10.1.8.4 Plastering

Plastering shall be started from top and worked down. All putlog holes shall be properly filled in advance of the plastering as the scaffolding is being taken down. Wooden screeds 75 mm and of the thickness of the plaster shall be fixed vertically 2.5 metres to 4 metres apart to act as gauges and guides in applying the plaster. The mortar shall be laid on the wall between the screeds using the plaster's float and pressing the mortar so that the raked joints are properly filled. The plaster shall then be finished off with a wooden straight edge reaching across the screeds. The straight edge shall be worked on the screeds with a small upward and sideways motion 50 mm or 75 mm at a time. Finally, the surface shall be finished off with a plaster's wooden float. Metal floats shall not be used.

When recommencing the plastering beyond the work suspended earlier the edges of the old plaster shall be scraped, cleaned and wetted before plaster is applied to the adjacent areas.

No portion of the surface shall be left out initially to be patched up later on.

The plaster shall be finished to a true and plumb surface and to the proper degree of smoothness as required by the Engineer.

The average thickness of plaster shall not be less than the specified thickness. The minimum thickness over any portion of the surface shall not be less than the specified thickness by more than 3 mm.

Any cracks which appear in the surface and all portions, which sound hollow when trapped, or are found to be soft or otherwise defective, shall be cut out in rectangular shape and re-done as directed by the Engineer.

10.1.8.5 Curing of finishes

Curing shall be started as soon as the mortar used for finishing has hardened sufficiently not to be damaged when watered, shall be kept wet for a period of at least 7 days. During this period, it shall be suitably protected from all damages.

10.1.8.6 Scaffolding for finishes

Stage scaffolding shall be provided for the work. This shall be independent of the structure.

10.1.8.7 Building during frosty weather

As a rule, brick work shall be suspended during frosty weather, as the stability of the same is endangered by the disintegration of the mortar by the frost while it is wet. When, however, the work is urgently required, it should be built in cement mortar, as it sets more rapidly than lime mortar, but all the freshly built portions should be carefully covered and protected on any recurrence of the frost, and always during the suspension of work for the night.

10.2 Half Brick Masonry

10.2.1 When and how used

When it is necessary to economise on space or to reduce dead weight, partition walls of half brick thickness or even less are constructed. Such walls shall bear no weight except their own. When built on suspended floors, there must be a beam underneath to take the load, or the floor itself designed to take its load. In modern construction, these partition walls are also provided at the ground floor to effect saving on space and cost. In such cases, these walls may be built on shallow foundations or even on the floor itself. Thickness of these walls shall be:

a) 4-½" or 3" in case of wall built with non-metric bricks, and

b) 10 cm or 5 cm case of wall built with metric bricks.

10.2.2 Hoop iron reinforcement

Wall of thickness 5 cm or 7.5 cm shall invariably be constructed with hoop iron reinforcement. Wall of thickness 10 cm shall be constructed without hoop iron reinforcement when any of the following conditions exist:

a) The height is not more than 2 meters.

b) The supported length is not more than 3 metres.

c) The work is in first storey below plinth level.

In all other situations, these partition wall of thickness 10 cm shall be reinforced with hoop iron. The hoop iron reinforcement shall be 25 mm wide and 1.6 mm thick. The hoop iron band shall be embedded in cement mortar as follows:

a) Wall constructed with metric bricks - every third course.

b) 4½" thick wall constructed by non-metric bricks - every 4th course.

c) 3" bricks wall constructed with non - every 3rd course.

The hoop iron shall be hooked (give in double lap) with minimum of 20 cm hooks, at all angled junctions. Hoop iron band shall be continued for 20 cm into the main wall on which the partition wall abuts, 5 cm length of the hoop iron being bent up or down so as to take a firm grip of the brick work.

Before laying the hoop iron, it shall be cleaned of rust and loose flakes with wire brush. The hoop iron shall lie quite flat on the mortar. Half the mortar for the joint shall first be laid and other half laid after the hoop iron has been laid into position so that it is fully embedded in the mortar. When hoop iron is not available, the Engineer may allow equivalent reinforcement in the form of rods.

10.2.3 Materials and construction

Brickwork shall be built with bricks laid in specified mortar. The work being carried out according to the specification for the class of brickwork specified, with the difference that all courses shall be laid with stretchers.

10.3 Brick drip course

Brick drip course shall be laid above the junction of the roof with the parapet wall (Fig. 16).

Specially moulded brick shall be laid for drip course. When such special bricks are not available, bricks cut to shape may be permitted. The shape of drip course shall be as shown in Fig. 16.

The arrangements, shape etc. of lime concrete gola below the drip course to prevent water seepage through the junction of roof and wall are shown in Fig. 16.

10.4 Moulding and cornices

Specified quality and class of bricks shall be used for the work. The bricks used for moulded work shall be either purpose moulded or cut to required shape.

Cornices shall not ordinarily project by more than 15 cm to 20 cm. This projection shall be formed by projecting each layer of brick by not more than one fourth of the length of bricks. Where cornices of greater than 20 cm. is required special arrangements such as metal cramps shall be used; which shall be paid for separately.

Corbelling shall be brought roughly to required shape by plastering with the specified mortar. The mouldings shall be brought to shape using metal or wooden templates, while the mortar is still green. The mouldings shall be cured properly for seven days and the work shall be properly protected against damages by rain etc.

10.5 Chamfering of bricks

In the case of brick work where a specified shape is required chamfering or cutting is to be done which shall be paid extra.

10.6 Measurements

10.6.1 General

All brick work shall be measured net, in decimal system, as fixed in its place subject to tolerances mentioned below. Any work done extra over the specified dimensions shall be ignored.

Dimensions shall be measured correct upto 0.01 metre, areas shall be worked out correct upto 0.01 square meter, and volumes shall be worked out correct upto 0.01 cubic metre.

The thickness of brick walls upto and including 75 cm thickness shall however be measured in multiples of half brick, viz:

i) for brick work with modular brick it shall be in multiples of 10 cm.

ii) for brick work with conventional FPS bricks it shall be in multiples of 11.2 cm

iii) for brick with FPS large size bricks it shall be in multiples of 12.5 cm.

Beyond 75 cm thickness the actual thickness of wall be measured.

If for any reason the thickness of wall is required to be a specific thickness not being a measured simple multiple of half brick the thickness of wall shall be taken as the next higher multiple of half brick by more than 2 cm. In the latter case actual specified thickness shall be.

Walls of half brick thickness or less shall be described as half brick wall stating its thickness and measured separately in square metres. The following shall be taken as half brick measurement:

For bricks 19 x 9 x 9 cm	10 cm
For bricks 19 x 9 x 4 cm	
For bricks 9 x 4-3/8" x 2-3/4"	4½" or 11.5 cm
For bricks 9 x 4-3/8" x 1-3/4"	
For bricks 10 x 4-7/8" x 3"	5" or 12.5 cm
For bricks 10 x 4-7/8" x 2"	

Corbels, string courses, projecting pilasters, aprons and friezes, sills, cornices, drip courses, over-sailing courses and other projections etc. of splayed bull nozed or any other type of purpose made or cut bricks shall be fully described stating dimensions of each and measured in running metres.

Reinforced brick work shall be kept separate from plain brick work. Reinforcement shall be measured separately unless specifically included in the items of brick work as in the case of half brick masonry wall reinforcement.

The work in the following situations shall be measured separately:

a) Foundations & plinths.

b) Super-structures above plinth level upto floor two level.

c) Super-structures above floor two level.

d) Square and rectangular pillars.

e) Circular pillars.

f) Curved in plan up to mean radius not exceeding 6 mtrs.

g) Tapered surfaces of brick masonry.

h) (i) In or under water or liquid mud.

(ii) In or under foul conditions.

Note: Brickwork in parapet shall be included in the corresponding masonry item of the storey immediately below the floor above which the parapet is built.

No deduction shall be made from the quantity of brickwork, nor any extra payment made for embedding in masonry of making holes, in respect of the following items:

i) Ends of joists, beams, pivots, girders, rafters, purlins, trusses, corbels, steps etc. whose cross sectional area does not exceed 500 sqcm.

ii) Opening not exceeding 1000 sqcm.

iii) Wall plates and bed-plates of slabs, chajjas and the like whose thickness does not exceed 10 cm and bearing does not extend to the full thickness of wall .

iv) Drainage holes, and recesses for cement concrete blocks to embed hold-fasts for doors windows etc.

v) Iron fixtures, pipes upto 300 mm dia, hold-fast of doors and windows built into masonry.

vi) Forming chases of section not exceeding 350 sqcm in masonry.

Masonry (excluding refractory brickwork) in chimney breasts, chimney stacks, smoke or air flues upto 0.25 sqm sectional area shall be measured as solid and no extra payment shall be made for pargetting and coring such flues. Where flues exceed 0.25 sqm in sectional area deduction shall be made from the same and pargetting shall be paid for separately.

Apertures for fire places shall not be deducted nor shall extra labour required to make splaying of jambs, throating and making arches over the aperture shall be paid for separately.

10.6.2 Half brick masonry

The work shall be measured in square metres.

10.6.3 Brick drip course

The drip course shall be measured in running metres.

10.6.4 Moulding and cornices

The sectional periphery of mouldings and cornices shall be measured in centimeters along the curve (excluding the portion in contact with the wall). The length shall be measured in metres. The unit for payment shall be per cm of periphery, by per metre length of the mouldings and cornices, measured as above.

10.6.5 Chamfering of bricks

Chamfering should be measured in running metre, correct to a centimeter.

10.6.6 Square or rectangular pillar

Square or rectangular pillar shall mean a detached masonry portion square or rectangular in section such that its breadth does not exceed three times its thickness and the thickness itself does not 60 cm. The measurement shall be done as for brick work-General. Extra payment shall be allowed for pillars over and above the rate for brick work in walls.

10.6.7 Circular pillars

Circular pillar shall include other forms of curved sections such as elliptical, partly straight and partly curved sections but shall not include intricate moulding work. The work shall be measured net as per actuals. Extra payment shall be allowed for circular pillars over and above the rate for brick work in wall.

10.6.8 Tapered walls

Measurement for tapered walls shall be as per actual work done but extra payment shall be allowed for tapered walls over and above the rate for brick work.

10.6.9 Curved masonry

Curved masonry shall include masonry which has a circular shape or other form of curve, in plan, having a minimum radius of curvature not exceeding 6 m. This shall be measured as per actual work done. The length in plan shall be measured along the mean radius. Curved masonry larger than 6 m radius in plan shall be measured under brick work general.

10.7 Rate

The rate shall include the cost of all the materials and labour as described in the respective items of work for all the operations as detailed in the respective specifications for the various items of work. The rate also includes carriage of materials upto 1 km by mechanical transport and upto 100 metres by head load, including the cost of re-handling of material within 100 metres. The labour rate as well as through rates include the cost of water. In case water is supplied free by the Department, the rate shall be reduced accordingly.

The labour rate includes the cost of water, tools and plants (scaffoldings), labour and material, and cost of good earth for mud mortar. Contractor's profit @ 10% and over-head charges @ 5% have separately been added in the rates.

Separate rate for 1st class and 2nd class brick work shall be paid as mentioned in the Schedule of Rates.

For additional items, rates as mentioned in the Schedule of Rates shall be paid.

Extra rate for laying brick work under following situations shall be paid as mentioned in the Schedule of Rates:

a) In or under water and/or liquid mud excluding cost of bailing out or pumping out water to remove slush.
b) In or under foul conditions.

10.8 Precautions to be taken to prevent cracks in buildings

In order to minimise cracks in buildings, the following measures shall be adopted subject to the approval of the Engineer.

10.8.1 Horizontal cracks in masonry and plaster at the floor or roof slab level

10.8.1.1 A smooth bearing for RCC slabs and beams on the wall with 6 mm cement plaster 1:3 (1 cement : 3 fine sand), finished with a floating coat of neat cement shall be provided and then finished with a thick coat of lime wash or Kraft paper. The sides and top of slabs and beams in contacts with walls shall be painted with thick coat of hot bitumen.

10.8.1.2 The slab shall not bear on full thickness of external wall. A gap of about 12 mm shall be kept between slab and external masonry and filled with bituminous filler or impregnated fibre board in case of Superior buildings and bituminous filler (80 kg hot bitumen : 1 kg cement : 0.25 cubic metre coarse sand) in other buildings. The external masonry of all beyond the expansion joint shall not be less than 10 cm. Please see Fig. 17.

10.8.1.3 A similar gap of 12 mm wide shall be provided and filled with impregnated fibre board or bituminous filler when two slabs about against each other and bear on an internal wall. Such expansion joints should always be provided at ridges (and not in valleys) as shown in Fig. 18.

10.8.1.4 Ceiling plaster shall be done first, and then the wall plaster. When the ceiling plaster is done, it shall be finished with a chamfered edge at an angles at its junction with the wall at bearing with a trowel while the plaster is being done it shall be kept separate from the ceiling plaster by a thin straight groove drawn with a trowel at an angle with the wall, while the plaster is still green. The arrangement is shown in Fig. 17 to 20.

10.8.1.5 RCC or plain cement concrete 1:2:4 bed plate with a smooth surface and a thick cost of lime wash or laid with Kraft paper shall be provided under the beams. The plaster of wall and the bed plate shall be kept separate from that of the beam given in Fig. 20. Minimum thickness of RCC bed plate shall be 10 cm and that of plain concrete 20 cm.

10.8.2 Horizontal cracks at the junction of sun shades with the wall

Wall plaster shall be kept separate from that of the RCC sun shade as in 10.8.1.4 above.

10.8.3 Inclined cracks at the junctions of sun shades with the wall

10.8.3.1 Flat brick arches shall be constructed for opening up to 1.2 metres.

10.8.3.2 RCC lintels shall be allowed to dry and shrink as much as possible before plastering the wall.

10.8.4 Vertical cracks at the bearings of RCC beams or pillars

These cracks occur when RCC beam has an expansion joint over the masonry pillar. These can be avoided by designing a continuous beam on the pillar. Where however, expansion joint in beam is essential a RCC bed plate may be provided over the pillar for its full length and width.

10.8.5 Transverse cracks in RCC slab in sun shades, verandahs and room

Expansion joints shall be allowed at 5 to 6 metres intervals in case of sun shades 12 to 13 metres in case of covered verandah slabs and 12 to 15 metres in case of slabs continuous over rooms in a row of quarters.

To prevent cracks in the masonry, below or above the expansion joints, the following measure shall be taken:

10.8.5.1 Sun Shades

In this case, the expansion joints shall not extend to the portion embedded in masonry but shall stop short of the face of the wall by 5 cm and the distribution reinforcement in the embedded portion and in the 5 cm portion of the chajja slab where there is no expansion joint, shall be increased to 40% of main reinforcement. The gap of the expansion joint in the projected portion shall not be filled with any material.

10.8.5.2 Verandah Slabs

In this case, the expansion joint shall be a neat but joint which shall be finished straight. The joint shall be carried right through the portion embedded in the masonry also. It is desirable to provide a vertical but joint in the masonry supporting the verandah slab at the expansion joints from plinth level. Where this is not possible, R.C.C. or plain cement concrete bed plates shall be provided on the bearing as shown in Fig. 20. To prevent cracks in the masonry above, the longitudinal wall shall have also a butt joint with gap running in the same vertical plane as the joint in the slab. The gap can, in the case of roof slabs, be sealed by copper cradles.

10.8.5.3 Room Slabs

In load structure, expansion joint in room slabs shall be similar to that in verandah slabs. Where slab is combined with T-Beams, the expansion joint shall be provided by substituting one of the T-beams, with rectangular beam and slabs as per Fig. 21.

In RCC framed structure, the expansion joint is generally provided in conjunction with twin beams and twin column as shown in Fig. 21 and 22. The expansion joint shall be provided with copper cradle and its top filled with bituminous materials. The underside of the beam shall be provided with sheet of asbestos or any other suitable material, which shall be fixed on one side and shall be free to move on the other side within oval shaped holes, in case of twin columns, the expansion joint is similarly covered on the inside and outside.

The gap between the twin column and the gap below copper cradle in twin beams need not be filled with any bitumen filler but may be kept unfilled. Before however, the joint covered on the outside with asbestos or any other suitable sheets, the gap should be cleaned thoroughly of all rubbish or mortar droppings etc.

10.8.6 Cracks at the junction of new building with old

When making additions to an old building, if new masonry is toothed with old masonry there is a likelihood of cracks occurring at the junction because of differential settlement. Toothing therefore shall be avoided and new masonry shall be laid with a slip joint, for thick walls. Where tongued and grooved joint is not possible as in 20 cm walls, the joint shall be straight butt joint only.

10.8.7 Cracks in general

10.8.7.1 Masonry work shall be proceeded systematically and uniformly at all levels.

10.8.7.2 The plaster work on walls shall be deferred as much as possible so as to let shrinkage in R.C.C. and masonry take place before plastering.

11. FLOORING

11.1 General Specification

11.1.1 Sand Filling

The earth filling shall be stopped at such a height as to allow of full thickness of sand, or cement concrete and the correct thickness of surfacing. In areas, where the water table is near the ground surface, a suitable treatment shall be provided to prevent the rise of moisture into the floor. This treatment shall be paid for separately.

11.1.2 Base Concrete

Base concrete shall be laid in accordance with the specifications laid in section 8 above, in one operation in a uniform layer, absolutely true and parallel to what is required on the finished surface and to the satisfaction of Engineer.

11.1.3 Levelling

A reference level mark shall be marked all-round on the walls (15 cms) or so above the floor level with the help of a water level. Water level consists of a can of water connected with rubber tubing to a glass tube, which shows the level of water in the can. With the help of this level, truely horizontal lines shall serve as a datum from which all levels for base layer and topping etc. shall be measured off.

11.1.4 Paving to Bond with Base Concrete

The finishing surface or paving shall not be laid before the base concrete, has set for at least seven days. While the surface is still soft enough to received and retain the impression, it should be brushed with stiff-bristled broom. This is very necessary in order to remove laitance, scum and inadequately embedded coarse aggregate.

In addition to the brushing, scour and pit the surface so as to provide mechanical bond for the topping. During the interval between the finish the base shall be thoroughly cured and protected from the deposition of grease, pitch paint or any other foreign substance. Also immediately prior to the placing of the finishing topping, the base course shall be roughened with steel wire brushes without disturbing the concrete and wetted. It shall be ensured that the surface of the base course is absolutely free from the surplus water, laitance and other foreign matter.

11.1.5 Surface to be passed

The surface of the screed bed or base concrete shall be passed by the Assistant Engineer before the wearing coat.

11.1.6 Flooring to continue under Doorway and Fireplace

The brickwork or masonry shall be kept down sufficiently under all archways, doors and fireplaces to admit the depth of finishing surface being carried through. Joints must be given at this place, however, to avoid unsightly cracks due to any uneven settlement. The offsets walls, pillars etc. shall be kept down sufficiently under to admit the full depth of both the finishing surface and the base below it being carried through.

11.1.7 Levels and Slopes

Unless otherwise specified, all floors shall be perfectly level, except bathroom and verandah floors, which shall have an outward slope of 1 in 60. The layers of sand concrete shall be uniform in thickness and any slope required is to be obtained by marking the outer walls lower than the inner ones by the necessary amounts.

11.1.8 Straight Edges and Spirit Levels

The Contractor shall provide and keep available wherever flooring work is proceeding, straight edges of a length not less than 2.5 metres and with parallel sides, as well a 25 cms spirit-level for the purpose of testing the trueness of the floor being laid.

Note: Specification given below for different type of flooring are in addition to the General Specifications mentioned above.

11.2 <u>White Glazed Tiles in Flooring, Treads of Steps, and Landings</u>

11.2.1 Material

White glazed tiles shall confirm to the specifications given below. All other materials used shall confirm to specifications given in the relevant sections or as decided by Engineer.

11.2.1.1 Glazed Tile (White, Indian make)

The tiles shall be of approved make and shall conform to IS: 777-1988. They shall be flat and true to shape and free from cracks, crazing spots chipped edges and corners. The glazing shall be of uniform shade.

The tiles shall be of nominal sizes such as 150 mm x 150 mm and 100 mm x 100 m or as specified. The thickness of the tiles shall be 5 mm, or 6 mm as specified. The tolerance on facial dimension value shall be ± 1.0 mm and ± 0.5 mm on thickness.

The top surface of the tiles shall be glazed. The glaze shall be either glossy or matt as specified. The underside of the tiles shall be completely free from glaze in order that the tile may adhere properly to the base. The edges of the titles shall be preferably free from glaze, however, any glaze if unavoidable, shall be permissible on any one edge of the tile.

11.2.1.2 Internal or External angle (Glazed)

The angles shall be of thickness not less than the tiles with which they are used. The size of the angles shall be as specified in the description of the item. The stipulated size of angled referred to the greatest width of the special measure in a straight line. The lengths of specials shall be 15 cm, 10 cm or other standard size available conforming to the size of

tiles available. In other respects, the general specifications described in 11.2.1.1 above shall be applicable.

11.2.2 Workmanship

11.2.2.1 Sub-grade

Sub-grade shall be of concrete or of R.C.C. slab.

11.2.2.2 Bedding

Bedding over which the tiles shall be laid shall be of 12 mm average thickness in cement mortar 1:3 (1 cement : 3 coarse sand).

11.2.2.3 Laying

Sub-grade shall be cleaned, wetted and mopped. The bedding shall be laid evenly over the surface, tamped and corrected to desired levels and allowed to harden enough to offer a rigid cushion to tiles and to enable the mason to place wooden planks across and squat on it. Before laying the tiles grey cement slurry or honey like consistency at 3.3 Kg/m^2 shall be applied over the bedding. At a time in area to accommodate about twenty tiles shall be applied with cement slurry. Tiles shall then be washed clean and fixed in the grout one after the other, each tile being gently tapped in line with adjoin tile. The joints shall be as thin as possible in straight line or as per the pattern. The surface of the flooring shall be checked with a straight edge about 2 m long so as to obtain a true surface with the required slope.

Where full size tiles cannot be fixed, these shall be cut (sawn) to the required size and their edges rubbed smooth to ensure straight and true joints. Tile fixed in the floor near the wall shall enter plaster, skirting or dado to a minimum depth of 10 mm.

After laying the tiles, excess cement grout is cleaned.

11.2.2.4 Jointing and finishing

The joints shall be cleaned of grey cement grout with wire brush or trowel to a depth of 5 mm and all dust and loose mortar removed. White cement shall then be used for flush pointing the joints. The floor shall be cured for seven days. The surface then be washed and cleaned. The surface shall not sound hollow when tapped.

11.2.3 Measurements

White glazed tiles shall be measured in square metres correct to two places of decimal. Length and breadth shall be measured correct to 1 cm between the exposed faces of skirting or dado where the junction of flooring with skirting or dado is square.

11.2.4 Rate

11.2.4.1 General

11.2.4.1.1 The rate shall include the cost of all materials and labour involved in all the operations des cribbed above for completing the work as per specifications and as per schedule.

11.2.4.1.2 The through rates include the carriage of all materials up to a distance of 100 meters on head load and 1 kilometre by mechanical transport. The rates of items involving terrazzo/glazed tiles have been worked out on the basis of rates as at district headquarters of Himachal Pradesh State. All other carriage shall be counted for separately depending upon locations of site of the work. The through rates include all wastage and the labour rates include the charges on account of form work, tools and plants, scaffolding, sundries and water charges etc.

11.2.4.1.3 The rates are applicable for laying of flooring up to floor two. For every subsequent storey-height, an additional rate of 1% above through rates should be added.

11.2.4.1.4 The rate includes water charges, contractor's profit @10% and overhead charges @5%. The rate does not include the cost of sub-grade if provided in specifications unless otherwise specified. Dividing strips shall be paid separately as mentioned in the latest applicable HPPWD Schedule of Rates.

11.2.4.2 The labour rates and through rates are applicable for glazed tiles of white shade and of size 152 mm x 152 mm x 6 mm. In case, the tiles used are of size 150 mm x 75 mm x 6 mm or 108 mm x 108 mm x 6 mm the labour rates shall be increased by 50%. The through rates shall be increased by 30%.

In case the coloured glazed tiles are used, the labour rates shall remain un-changed but the through rates shall be increased by 15%. These rates are not applicable for specially decorated or fluted tiles for which special rates shall be paid, if used.

The rate also includes the cost of bedding and cement slurry applied over it. An extra rate as per schedule shall be paid for laying of white glazed tiles in treads of steps not exceeding 30 cm in width.

11.3 White Glazed Tiles in Risers of Steps, Skirting and Dado

11.3.1 Material

Material shall be as specified in 11.2.1 above.

11.3.2 Workmanship

11.3.2.1 Preparation of surface

In case of brick masonry wall, the joints shall be raked out to a depth of at least 15 mm while the masonry is being laid. In case of concrete wall, the surface shall be hauled and roughened with wire brushes. The surface shall be cleaned wetted thoroughly before commencing the laying work.

11.3.2.2 Laying

The wall surface shall be covered with 12 mm thick plaster of cement mortar 1:3 (1 cement : 3 coarse sand) mix and allowed to harden. The plaster shall be roughened when it sets initially with wire brushes or by scratching diagonal lines 1.5 mm deep at 7.5 cm c/c both ways. The back of tiles shall be buttered with grey cement slurry and edges with white cement slurry and set in bedding mortar. The tiles shall be gently tamped in position one after the other keeping the joints as thin as possible. Top of skirting or dado shall be truly horizontal and the joints vertical or as per required pattern.

Risers of steps, skirting and dado shall rest on top of treads or flooring. Where full size tiles cannot be fixed, these shall be cut (sawn) to the required size and the edges be smoothened.

11.3.2.3 Curing and finishing

The joints shall be cleaned and flush pointed with white cement. The surface shall be kept wet for seven days. After curing the surface shall be washed clean. The surface shall not sound hollow when tapped with a mallet.

11.3.3 Measurement

Risers to steps, skirting and dado shall be measured in square metres correct to two places of decimal. Length and height shall be measured along the finished face of the skirting or dado including curves where specials such as cover, internal and external angles and beads are used. Length except in case of risers and skirting where height shall be measured correct to 3 mm.

At places where full size are not used and cut (sawn) tiles are required, extra shall be paid for the same confining the extra to the portion using cut tiles. In addition to payment for risers, skirting and dado specials such as covers, internal and external angles, beads and cornices shall be measured separately and paid for running metres.

11.3.4 Rate

The rate shall be as per specification in 11.2.4 above. The rate also includes the cost of cement plaster to be used as bedding and cement slurry used. Where tiles are to cut, an extra rate as per schedule shall be paid.

12. STEEL WORK

12.1 Materials

12.1.1 Structural steel

Standard quality mild steel of various varieties and designations shall be used for different works as mentioned below:

12.1.1.1 St. 42-S

This variety of steel (standard quality) shall conform to specifications given in IS: 226-1975 and shall be used for (i) riveted steel work (ii) bolted steel work (iii) steel work where welding is employed for fabrication provided that the thickness of material does not exceed 20 mm. When material conforming to this standard is over 20 mm thick, special precautions may be required in case the material is to be welded (See IS: 823-1964).

12.1.1.2 St. 32-O

This variety of steel (Ordinary quality) shall conform to specifications given in IS: 1977-1996 and is intended for general purposes such as door and window frames window bars, grills steel gates, hand railings, builders hardware, fencing posts, the bars etc.

12.1.2 Steel tubes for structural purpose

The steel tubes shall be manufactured as per specifications given in IS: 1161-1998. The following tolerances shall apply:

(a)	Outside Diameters	
	For size up to an including 40mm nominal bore	+0.5 mm
		- 1.0 mm
	For size above 40mm nominal bore	+1.0 mm
(b)	Thicknesses	
	For all sizes thickness shall not be less by more than 10% for welded tubes, from the specified thickness for different diameter pipes.	
(c)	Weight	
	No single tube shall be below the standard weight by more than 4 percent.	

12.1.3 Rivets, black bolts, turned and fillet bolts

Specifications for rivets shall be as per section 8.2.2.7.2.5 above, and for black bolts, turned and fillet bolts as per section 8.2.2.7.2.6 above.

12.1.4 Other materials

Copper alloys, mechanite or special steels used for bearings or similar other parts shall conform to the requirements specified by the Engineer or included in special provisions.

All paints and enamels used shall conform to the requirements specified on the drawings, or other special provisions laid down by the Engineer. Unless otherwise specified, paints all conform to the relevant IS specifications.

12.2 General Specifications

12.2.1 Fabrication

12.2.1.1 General

All work shall be in accordance with the drawing and as specified in these specifications. Care being taken that all parts of an assembly fit accurately together.

Unless specially required under the Contract, corresponding parts need not be interchangeable but the parts shall be match marked as required under Clause 12.2.1.7 below.

Templates, jigs and other appliances used for ensuring the accuracy of the work shall be of mild steel; where specially required these shall be bushed with hard steel. All measurements shall be made by means of steel tape or other device properly calibrated. Where bridge materials have been used as templates for drilling, these shall be inspected and passed by Engineer before they are used in the finished structure.

All structural steel members and parts have straight edges flattened by pressure unless they are required to be of curvilinear forms. They shall also be free from twist. Pressure applied for straightening or flattening shall be as would not injure the materials. Adjacent surface or edges shall be in close contact or at uniform distance throughout.

12.2.1.2 Preparation of edges and ends

All structural steel parts where required, shall be sheared cropped, sawn or flame cut and ground accurately to the required dimensions and shape.

In the case of high tensile steel at least 6 mm of the material from the flame cut edge shall be removed by machining.

Longitudinal of all plates and cover plates in plate girders and built-up members shall be machined except in the following cases:

a) Rolled edges of single universal plates or flats may not be machined.
b) Covers to single flange plates may be left un-machined.
c) Machine flame cutting instead of matching is acceptable for edges of single plates in compression and for edges of single plates, 25 mm or less thick in tension.
d) Edges of single shaped plates over 25 mm thick being machined by ordinary method may be machine flame cut and the end surface ground.
e) Edges of universal plates on flats of the same nominal width used in tiers may be left un-machined, if so authorized by the Engineer.

All edges of splice and gusset plates 12 mm thick and over shall be machined and those less than 12 mm thick may be sheared and ground.

The ends of plates and sections forming the main components of plate girders or of built-up members shall be machined, machine flame cut, sawn, or hand flame cut and ground.

In joint and splices of compression members, in girder flanges and in tension members where so specified on the drawings. The abutting surfaces shall be faced and brought to an even bearing. A tolerance of 0.5 mm may be permitted locally. Where close fitting is not specified, any clearance shall not exceed 3 mm.

Where ends of stiffeners are required to be fitted they shall be machined, machine flame cut, sawn, sheared and ground, or hand flame cut and ground.

The ends of lacing bar shall be rounded unless otherwise required.

Other edges and ends of mild steel parts may be sheared and any burrs at edges shall be removed.

12.2.1.3 Preparation of holes

12.2.1.3.1 Drilling and sub-punching

All holes for rivets shall be drilled or drilled small and reamed. However, if preferred, the holes may be sub-punched to a diameter of 6 mm less than the finished size and then reamed to the proper size.

Where several plates or sections form a compound member, they shall where practicable be firmly connected together by clamps or taking bolts and the holes drilled through the group in one operation or alternatively, and in the case of repetition work the plates and sections may be drilled separately from jigs and templates. The jigs and templates shall be checked at least once after 25 operations. All burrs shall be removed.

In the case of repetition of spans, the erection of every span shall not be insisted upon, except where close or turned bolts are used, provided that methods are adopted to ensure strict inter-changeability. In such cases, one span in ten or any number less than ten of each type shall be erected from pieces selected at random by the Engineer and should there be any failure of the pieces to fit, all similar spans shall be erected complete. In the event of the spans being proved completely inter-changeable, all corresponding parts shall carry the same marks so that sorting of the materials at the site is facilitated.

12.2.1.3.2 Block drilling

Where the number of plates to be riveted exceeds three or the total thickness is 90 mm or more, the rivet holes, unless they have been drilled through steel round after assembling. In such cases the work shall be thoroughly bolted together.

12.2.1.3.3 Size of holes

The sizes of holes in millimetre are given in table below.

Diameter of Holes for Rivets

Nominal dia. of rivets (mm)	Dia. of holes (mm)
12	13.5
14	15.5
16	17.5
18	19.5
20	21.5
22	23.5
24	25.5
27	29.0
30	32.0
33	35.0

12.2.1.3.4 Close tolerance bolts and barrel bolts

The diameter of the holes shall be equal to the nominal diameter of the shank or barrel subject to a tolerance of +0.125 mm and – 0 mm.

12.2.1.3.5 Removal of burrs

The work shall be taken after drilling and all burrs left by drilling and the sharp edges of all rivet holes completely removed.

12.2.1.4 Rivet and riveting

The diameter of rivets shown on drawings shall be the size before heating. Each rivet shall be of sufficient length to form a head of the standard dimensions as given in I.S. Handbook on Steel Sections, Part I. It shall be free from burrs on the underside of the head.

When countersunk heads are required, the head shall fill the countersunk. The included angle of the head shall be as follows:

(a)	For plates over 14mm	90°
(b)	For plates up to and including 14mm	120°

The tolerance on the diameter of rivets shall be in accordance with the IS: 1148 and IS: 1149 and unless otherwise specified the tolerance shall be minus tolerance.

Rivets shall be heated uniformly to a light cherry red and shall be red hot from head to the point when inserted and shall be upset in its entire length so as to fill the hole as completely as possible when hot. Rivets after being heated before being inserted in the hole shall be made free from scale by striking the hot rivet on a hard surface.

Wherever possible, the rivets be machine driven, preferably by direct acting riveters. The driving pressure shall be maintained on the rivets for a short time after the upsetting is completed.

Where flush surface is required, any projecting metal shall be chipped or ground off.

Before revering is commenced, all work shall be properly bolted up so that the various sections and plates are in close contact throughout. Drifts shall be used only for drawing the work into position and shall not be used to such an extent as to distort the holes. Drifts of a larger size than the nominal diameter of the hole shall not be used.

Driven rivets, when struck sharply on the head with a quarter pound rivet testing hammer, shall be free from movement and vibration.

All loose or burnt rivets and rivets with cracked or badly formed defective head or with heads which are unduly eccentric with the shanks, shall be removed and replaced. In removing rivets, the head shall be sheared off and the rivet punched out so as not to injure the adjacent metal and if necessary, they shall not be permitted.

12.2.1.5 Black bolts, nuts and washers

12.2.1.5.1 Black bolts

Black bolts are forged bolts in which the shanks, heads and nuts do not receive any further treatment except cutting of screw threads. They shall be true to shape and size and shall have the standard dimensions as shown on the drawings.

12.2.1.5.2 Close tolerance bolts

Close tolerance bolts shall be faced under the head and turned on the shank.

12.2.1.5.3 Turned barrel bolts

The diameter of the screwed portion of turned barrel bolts shall be 1.5 mm smaller than the diameter of the barrel unless otherwise specified by Engineer. The diameter of bolts as given on the drawing shall be the nominal diameter of the barrel. The length of the barrel shall be such that it bears fully on all the parts connected. The threaded portion of each bolt shall project through the nut by at least one mm and steel work shall be machined.

12.2.1.5.4 Washers

In all cases where the full bearings area of the bolt is to be developed, tee bolt shall be provided with steel washer under the nut of sufficient thickness to avoid any threaded portion of the bolt being within the thickness of the parts bolted together and to prevent the nut when screwed up, from bearing on the bolt.

For close tolerance or turned barrel bolts, steel washers whose faces give a true bearing shall be provided under the nut. The washer shall have a hole diameter not less than 1.5 mm larger than the barrel and a thickness of not less than 6 mm so that nut, when screwed up, will not bear on the shoulder of the bolt.

Taper washers with a correct angle of taper shall be provided under all nuts bearing on beveled surface.

Spring washer may be used under nuts to prevent slackening of the nuts when excessive vibrations occur.

Where the heads or nuts bear on timber, square washers having a length of each side not less than three times the diameter of the bolts or round washers having a diameter of 3-½ times the diameter of bolts and with a thickness not less than one quarter of diameter shall be provided.

12.2.1.5.5 Studs

Ordinary studs may be used for holding parts together, the holes in one of the parts being tapped to take the thread of the stud. Countersunk studs may be used for connections where the surfaces are required to be clear of all obstruction, such as protruding heads of bolts or rivets, studs may also be welded n the steel work in the positions required.

12.2.1.5.6 Service bolts

Service bolts shall have the same clearance as black bolts and where it is required that there should be no movement prior to final riveting, sufficient drifts or close tolerance bolts shall be used to locate the work.

12.2.1.5.7 Drifts

The barrel shall be drawn or machined to the required diameter for a length of not less than one diameter over the combined thickness of the metal through which the drifts have to pass. The diameter of the parallel barrel shall be equal to the nominal diameter of the hold subject to a tolerance of +0 mm and –0.125 mm. Both ends of the drift for a length of equal 1-½ times the diameter of the parallel portion of the bar shall be turned down with a taper to a diameter at the end equal to one-half that of parallel portion

12.2.1.6 Pin and pin holes

12.2.1.6.1 Pins

The pins shall be parallel throughout and shall have a smooth surface free from flows. They shall be of sufficient length to ensure that all parts connected thereby shall have a full bearing on them. Where the ends are threaded, they shall be turned to a smaller diameter at the ends for the thread and shall be provided with a pilot nut, where necessary, to protect the thread when being dawn to place.

Pins more than 175 mm in length or diameter shall be forged and annealed.

12.2.1.6.2 Pin holes

Pin holes shall be bored true to gauge, smooth, straight a right angles to the axis of the member and parallel with each other, unless otherwise required. The tolerance in the length of tension members from outside to outside of pin holes and of compression member from inside to inside of pin holes shall be one millimetre. In built-up members, the boring shall be done after the member have been riveted or welded.

The specified diameter of the pin hole shall be its minimum diameter. The resulting clearance between the pin and the hole shall not be less than 0.5 mm and more than 1mm.

12.2.1.6.3 Shop erection and match marking

Before being dispatched, the steel work shall be temporarily erected in the fabrication shop for inspection by the Engineer either wholly or in such portion as the Engineer may require so that he may be satisfied both to the alignment and fit of all connections. For this purpose, sufficient number of parallel drifts and service bolts tightly screwed up shall be employed. All parts shall fit accurately and be in accordance with drawings and specifications.

After the work has been passed by the Engineer and before it is dismantled, each part shall be carefully marked for re-erection with distinguishing marks and stamped with durable markings. Drawings, showing these markings correctly shall be supplied to the Engineer.

Where close tolerance or turned barrel bolts are used for those cases where inter-changeability is not insisted upon, each span shall be erected and members of each span marked distinctly.

12.2.1.7 Welding

All welding shall be done with the prior approval of the Engineer and the workmanship shall conform to the specifications of IS: 823 or other relevant Indian Standards as appropriate.

When material thickness is 20 mm or more, special precaution like preheating shall be taken as laid down in IS: 823.

Welding shall be permitted to be performed for the project either in the shop or in the field only by operators who have passed qualification tests to the satisfaction of the Engineer. If in the opinion of the Engineer any operator is considered to be doing sub-standard work, he will not be allowed to continue on the work until he passes a re-qualification test.

The Contractor shall furnish satisfactory evidence to the Engineer regarding the qualification of his operators and obtain his approval, prior to their employment on the project.

12.2.1.8 Tolerances

Tolerances in dimensions of components of structural steel work before fabricated steel work shall be specified on the drawings and shall be subject to the approval of the Engineer.

Unless specified otherwise the following tolerances shall be maintained.

The tolerance on all depths of girders shall be +0.002 (depth) for depths up to 1500 mm and for depths above 1500 mm it shall be +0.0015 (depth).

The tolerance on lengths of individual components and the total length or span of the assembled components shall be +3.0mm for lengths less than 12 metre and for lengths greater than 12 metre it shall be +0.00025 (length).

The spacing of the stiffeners of the plate girders shall be accurately maintained with a tolerance of + 4 mm.

The tolerance in distances between consecutive gusset plates shall be +2.0 mm.

12.2.2 Painting

12.2.2.1 General

Unless otherwise specified, all metal work shall be given approved shop coats as well as field coats of painting. The item of work shall include the preparation of metal surface, the application covering and drying of the paint coatings and the supplying of all tools, scaffolding, labour and materials necessary.

General steel work shall be protected against corrosion by:

(i) Minimum of three coats of paint, or

(ii) A metal coating followed by two coats of paint.

Unless otherwise specified, all painting and protective coating work shall generally be done in accordance with the IS: 1477 (Part 1).

12.2.2.2 Surface preparation

Steel surface to be painted either at the fabricating shop or at the site of work shall be prepared in a thorough manner with a view to ensuring complete removal of mill scale by one of the following processes as agreed to between the fabricator and the Engineer:

(a) Grit and sand blasting;
(b) Pickling which should be restricted to single plates, bars and sections;
(c) Flame cleaning; and
(d) Scraping and wire brushing.

Priming coat shall be applied as soon as practicable after cleaning and in case of flame cleaning, primary coat shall be applied while the metal is still warm.

All slag from welds shall be removed before painting. Care shall be taken to brush the surface clean prior to painting. Surfaces shall be maintained dry and fee from dirt and oil. Work outdoors in frosty or humid whether shall be avoided.

12.2.2.3 Coatings

Prime coat to be used shall conform to the specification of primers approved by the Engineer. Metal coatings shall be regarded as priming coatings.

All coats shall be compatible with each other. When metal coatings are used, the undercoat shall be compatible with the metal concerned. The undercoat and the finishing coat shall preferably be from the same manufacturer. Successive coats of paint shall be of different shades or colours and each shall be allowed to dry thoroughly before the next is applied. Particular care shall be taken with the priming and painting of edges, corners, welds, and rivets.

12.2.2.4 Painting in the shop

All fabricated steel shall be painted with at least one priming coat in the shops, unless the exposed surfaces are subsequently to be cleaned at site or are metal coated.

Shop contact:

Surface, if specifically required to be painted, shall be brought together while the paint is still wet.

Surface not in contact but inaccessible after shop assembly shall receive the fully specified protective treatment before assembly.

Where surfaces are to be welded, the steel shall not be painted or metal coated within a suitable distance from any edges to be welded if the specified paint or metal coating would be harmful to welders or is expected to impair the quality of site welds.

Exposed machined surfaces shall be adequately protected.

12.2.2.5 Painting at Site

Surfaces which will be inaccessible after site assembly shall receive the full specified protective treatment before assembly.

Surface which will be in contact after site assembly shall receive a coat of paint (in addition to any shop priming) and shall be brought together while the paint is still wet.

Damaged or deteriorated paint surfaces shall first be made good with the same type of coat as the shop coat.

Where steel has received a metal coating in the shop this coating shall be completed on site so as to be continuous over any welds, bolts and site rivets.

Specified protective treatment shall be completed after erection.

Note: Specifications given below for individual items are in addition to the specifications described above.

12.3 Individual Items

12.3.1 Steel Work – Riveted, Bolted or Welded in Built-up Section

12.3.1.1 Laying out

The steel structure as shown in the drawings or as per directions of the Engineer, shall be laid out on a level platform to full scale and to full size or in parts. A steel tape shall be used for measurements to ensure maximum accuracy.

Wooden templates 12 mm to 19 mm thick or metal sheet templates shall be made to correspond to each connecting gusset plate and rivet holes shall be accurately marked on them and drilled. The templates shall be laid on the steel members, and holes for riveting and bolting marked on them. The ends of steel members shall also be marked for cutting. The base of steel columns and the position of anchor bolts be carefully set out.

12.3.1.2 Fabrication

The steel sections as specified shall be straightened and cut, square and accurately to correct lengths. The cut ends exposed to view shall be finished smooth. No two pieces shall be welded or otherwise jointed to make up required length of a member except as indicated in the drawing or otherwise specifically permitted by the Engineer. All straightening and shaping to form shall be done by application of pressure and not by hammering. Any bending or cutting shall be carried out in cold condition (unless otherwise directed) in such a manner as not to damage the strength of the metal.

All stiffeners shall be formed by pressure, and where practicable, the metal shall not be cut and welded in making these. In major works or where so specified, shop drawings giving complete details and information for the fabrication of the component parts of the structure, including the location type, size, length and details of rivets, bolts, or welds shall be prepared in advance of the actual fabrication and approved by the Engineer. The drawings shall indicate the shop and field rivets, bolts and welds. The steel members shall be distinctly marked or stencilled with the identification marks as given in the shop drawings.

The bars shall be thickened at the ends so as to provide for screwed threads and gradually tapered off to meet their normal section.

Great accuracy shall be observed in the fabrication of various members, so that these can be assembled without being unduly packed, strained or forced into position and when built-up, shall be true and free from twists, chinks, buckles or open joints.

Before making holes in individual members for fabrication the steel work intended to be riveted or bolted together shall be assembled or clamped properly and tightly so as to ensure close abutting, or lapping of the surfaces of different members. All stiffeners shall bear tightly both at top and bottom without being drawn or caulked. The abutting joints shall be cut or dressed true and straight, and fitted close together.

Web splice plates and fillers under stiffeners shall be cut to fit within 3 mm of flange angles. Web plates of girders which have no cover plates shall have their ends flush with

the top of angles forming the flanges unless otherwise required. The web plates, when spliced shall have clearance of not more than 6 mm.

The erection clearance for cleated ends of members connecting steel to steel preferably be not greater than 1.5 mm. The erection clearance at the ends of beams without web cleats shall not be more than 3 mm at each end but where for practical reasons, greater clearance is necessary, suitably designed seating shall be provided.

Pins and rollers shall be accurately tuned to gauge. These shall be straight and smooth and free from flaws. The roller bearing shall be provided with adequate arrangements for holding the girders or resting on it, from lateral displacement.

Expansion bed plates shall be planed true and smooth. The planning of bed plates shall be done in the direction of the movement of the girder or truss resting on it.

Column splices and butt joints of struts and compression members depending on contract for stress transmission shall be accurately machined and close-butted over the whole section. In column caps and bases, the ends of shafts together with the attached gussets, angles, channels etc., after riveting together shall be accurately machined so that parts connected abut each other over the mitered surfaces fabricated and placed in position with great accuracy so that they are not unduly reduced in thickness by machining.

The ends of bearing stiffeners shall be machined or round to fit tightly both at the top and bottom.

All holes generally be drilled to the required size and at the required position. Holes shall be prepared as specified in section 12.2.1.3 above. Holes for black bolts shall be larger by 0.4 to 6 mm as shown in table below under column "Coarse" than the nominal diameter of the rivets or black bolts depending upon the dia of rivets. Holes for turned and fitted bolts shall be drilled or reamed bolts as shown in table below under column "Medium".

Dimensions for Clearance of Holes for Metric Bolts (All dimensions in mm)

Bolt Thread Diameter "d"	Clearance Hole Diameter "D"	
	Medium	Coarse
1.6	1.8	2
2	2.4	2.6
2.5	2.9	3.1
3	3.4	3.6
4	4.5	4.8
5	5.5	5.8
6	6.6	7
7	7.6	8
8	9	10
10	11	12
12	14	15
14	16	17
16	18	19
18	20	21
20	22	24
22	24	26
24	26	28
27	30	32
30	33	35
33	36	38
36	39	42
39	42	45

Holes shall have their axis perpendicular to the surface board through.

Holes for counter sunk bolts shall be made in such a manner that their heads fit flush with the surface after fixing.

The work of fabrication shall be completed in the workshop as far as it is practicable to do so. Site-jointing shall be done with rivets or turned and fitted bolts, or black bolts or welding as shown in drawings or as directed by the Engineer. Generally, the following principles shall govern the use of rivets, turned and fitted bolts and black bolts:

(i) Rivets or turned and fitted bolts shall be used where the connection is such that slip under load had to be avoided.

(ii) Black bolts may be used very sparingly where a force is carried through a connection without impact, vibration or reversal of stresses (unless such reversal is due solely to wind forces).

In case of welding, holes shall only be made for the bolts use for temporary fastening as shown in drawings.

12.3.1.3 Riveting

The parts assembled for riveting shall be in close contact with each other, and the bearing stiffeners shall bear tightly, both at top and bottom without being drawn or caulked. Members to be permitted except to draw the parts together and the drifting tool so used, shall have its maximum diameter not exceeding the nominal diameter of rivets or bolts. Drifting done during assembling shall not distort the metal or enlarge the holes.

The shanks of rivets shall project beyond the plate-surface sufficiently so as to fill the hole thoroughly and form the required head after riveting.

Riveting shall be done by hydraulic or pneumatic process. However, where such facilities are not available hand riveting may be permitted by the Engineer. The rivets shall be heated red hot, care being taken to control the temperature of heating so as not to burn the steel. Rivets of diameter less than 10 mm may be fitted cold. Rivets shall be of heat finish with head full and of equal size. All loose, burnt, or badly formed rivets with concentric or deficient heads shall be cut out and replaced. The heads of rivets shall be central to shanks and shall grip the assembled members firmly. In cutting out rivets care shall be taken so as not to injure the assembled members. Caulking or reoccupying shall not be permitted.

For testing rivets a hammer weighting approx. 0.25 kg shall be used. Both heads of the rivets (especially the machine head) shall be tapped, slack rivets will give a hollow sound and a jar.

All rivet heads shall be painted with red lead paint within a week of their fixing.

12.3.1.4 Bolting

The bolting with bolts and nuts shall be as per specifications given in section 8.2.2.7.2.6 above.

12.3.1.5 Welding

12.3.1.5.1 General

Welding shall generally be done by electric process. The electric are method being economical, is usually adopted. Where public electricity is not available, a suitable generator shall be arranged. Gas welding shall be resorted to, using oxyacetylene flame with specific prior approval of the Engineer.

Gas welding shall not be permitted for structural steel work. Gas welding requires heating of the members to be welded along with the welding rods and likely to create temperature stresses in the welded members. Precautions shall, therefore be taken to avoid distortion of the members due to these temperature stresses.

The work shall be done as shown in the shop drawing which should clearly indicate various details of the joints to be welded, type of welds, shop and site welds, as well as the type of electrodes to be used. Symbol for welding on plans and shop drawings shall be according to IS: 813-1986. As for as possible every effort shall be made to limit the welding that must be done after the structure is erected so as to avoid the improper welding that is likely to be done due to heights and difficult positions on scaffolding etc. apart from the aspect of economy.

12.3.1.5.2 Types of welding

Welds used for joining structural members are generally of the following 2 types as under:

(i) *Fillet weld:* The cross section of fillet weld is triangular and it is used to join two surfaces normally at right angle to each other. This type of weld is used more frequently in structural connections than any other type, and is usually in the forms of isosceles triangle. The fillet welds shall be continuous or in intermittent as specified in the design.

(ii) *Butt weld:* These are classified according to the method of grooving or preparing of the base metal. The metal pieces shall be filled or chiselled to the required shape for butt welding at the throat for which no extra payment shall be made.

Fillet and Butt welds are illustrated in Fig. 23. The work shall conform to IS: 816-1969.

Special type of welds as slot welds shall be used where so specified.

12.3.1.5.3 Operation of plant and equipment

Either direct or alternating current (but not both types) may be used throughout the whole work. An Ammeter shall be provided to each arc and so situated that the Engineer can easily check the current being used by the operator. Each welder shall be supplied with a portable current regulator to enable him to adjust the welding current within the approved limits without leaving his work. Only qualified operators shall be employed for welding and they shall have been trained and shall be tested after every three months as per provisions of IS: 817-1966 for "Code of Practice for training and testing of Metal Arc Welders."

12.3.1.5.4 Making holes

In welded structure holes are necessary for service bolts required during erection. These holes made as specified shall be filled with punches and welded properly to form a composite section.

12.3.1.5.5 Preparation of surface

Surfaces which are to be welded together shall be free from loose mill-scale, rust paint, grease or other foreign matter. A coating of boiled linseed oil shall be permitted.

12.3.1.5.6 Assembly for welding

Before welding is commenced the plates shall first be brought together and firmly clamped or spot welded at specified distance. This temporary connection has to be strong enough to hold the parts accurately in place without displacement.

12.3.1.5.7 Precautions

All operations connected with welding and cutting equipment shall conform to the safety requirement given in IS: 818-1968 "Safety and Health requirements in Electric and Gas Welding and Cutting Operations."

The following points shall be borne in mind during the process of welding:

(a) Welds shall be made in flat position, wherever practicable.

(b) Arc length, voltage and amperage shall be suited to the thickness of material, type of groove and other circumstances of work.

(c) The sequence of welding shall be such that where possible, the members which offer the greatest resistance to compression are welded first.

12.3.1.5.8 Process of welding

The electrode manipulation during welding shall be such as to ensure that:

(i) The base metal is in fused state when the filer metal makes contact with it.

(ii) The filer metal does not overflow upon any unfused base metal.

(iii) The base metal is not under cut along weld edges.

(iv) The flowing metal floats the slags, the oxides, and the gas bubbles to the surface behind the advancing pool.

In case any of these requirements is unattainable by manipulation, the current shall be adjusted or the electrode changed.

Each time the arc is started the electrode shall be moved in such a way that the fusion of the base metal at starting point is assured. At the completion of a run the movement of electrode shall be slowed down to fill the arc crater.

After every interruption of the arc except at completion of the run, the arc shall be restarted ahead of the previous deposit and then moved back to fill the crater; or such alternative technique shall be used as will ensure complete filling of the crater or complete fusion between the new and old deposits and the base metal at the point of junction and result in continuity of weld. Before welding operation is completed, all traces of slag shall be removed from the deposit, by chipping if necessary and the deposit and the adjoin base material shall be wire brushed and cleaned at all points. The requirements shall apply not only to successive layers but also to successive beats, and to the over lapping area wherever a junction is made on starting a new electrode.

(v) The welds shall be free from cracks, discontinuity in welding and other defects such as (a) under-size, (b) over-size, (c) under-cutting and (d) over-cutting in the case of fillet welds and defects; (b), (c) and (d) in the case of butt welds.

All defective welds which shall be considered harmful to the structural strength shall be cut out and rewelded.

Finished welds and adjacent parts shall be protected with clean boiled linseed oil and after all slag has been removed. Welds and adjacent parts shall be painted after the same are approved by the Engineer.

12.3.1.5.9 Inspection and testing of welds

The method of inspection and testing shall be as under:

(a) *Visual Inspection*: The following factors shall be considered during the Visual Inspection:

(i) *Dimensions of Weld Deposit*: The size of weld shall be as specified and it may be slightly over but not under.

(ii) *Shape of Profile*: The profile of the weld is affected by the position of the joint, but it shall be uniform. In case of butt and corner welds, the profile shall be slight convex and in the case of fillet welds it shall usually be concave.

(iii) *Uniformity of Surface*: the height and spacing of the ripples shall be uniform, these being indicative of workmanship.

(iv) *Degree of Undercut*: Undercutting is undesirable. The weld joint shall be free from undercut, but slight intermittent occurrences may be disregarded.

(v) *Smoothness of Joints*: The joints in the weld run where welding has been adopted, shall be as uniform and smooth as possible and shall show no pronounced hump or crater in the weld surface.

(vi) *Freedom from Surface Defects*: The surface of the weld shall be free from porosity, cavities and burnt of scale.

(vii) *Penetration Bead in Butt Welds*: A slight penetration bead shall be present and it should be reasonably uniform in width and appearance. Intermittent occurrences of lack of penetration bead may be disregarded.

(viii) *Degree of Fusion*: Fusion shall be complete over the whole area of the joint surface.

(ix) *Degree of Root Penetration*: The defects are mostly likely to occur at the root of the weld and in the position they are liable to have the maximum effects in reducing the strength of the weld. A close examination of the root shall, therefore, be made. In butt welds, the penetration should extend to the underside of the plates producing a penetration bead of the right size. In fillet welds with good root penetration, the weld metal should reach the corner.

Note 1: In case of fusion welding or non-fusion weld and fillet welds will appear in a joint, fillets being at the cretches.

Note 2: In case of non-fusion welding of cast iron the joints shall show satisfactory penetration and adhesion.

(x) *Gas Cavities and Flux Entrapments:* Unless they are caused by the use unsuitable material, they are attributable to the quality of workmanship the desired result being to achieve uniform appearance and freedom from cavities and flux entrapments (where flux is used). In fusion welding of mild steel, cast iron and aluminium where neutral flame is used, and in fusion welding of brass or braze welding of cast iron where oxidising flame is used in current welding technique may result in rough, porous, discoloured and lustreless appearance in the fracture.

Note: In case of fusion welding or non-fusion welding of cast iron isolated blowholes or concentration of pinholes in the weld metal shall be regarded as grounds for rejection but isolated pinholes shall not be so regarded.

(b) *Bend Testing (for ductility)*: The elongation shall be not less than 30 percent for stress relieved welds and not less than 25 per cent for non-stress relieved welds.

(c) *Tensile Testing (Reduced Section Tensile testing):* The tensile strength shall be not less than minimum of the specified tensile range of the parent metal.

(d) *Radiographic Examination:* This shall be done as given in IS: 6227-1971.

For use of metal arc welding in tubular structures, refer IS: 6227-1971.

All the members shall be thoroughly cleaned of rust scales, dust etc. and given a priming coat of red lead paint, before fixing them in position.

12.4 Measurements

12.4.1 General

The following provisions shall apply for measurement of steel work in general:

(a) All work shall be measured of finished dimensions as fixed at site and measured net, unless specified otherwise.

(b) The weight of steel sections, steel rods and steel strips in finished work shall be calculated from standard weight on the same basis on which steel as supplied to the Contractor by the department or those given in relevant Indian Standards if the steel is arranged by the Contractor.

(c) The weight of steel sheet, plate and strip shall be taken from relevant Indian Standards based on 7.85 kg/m^2 for every mm of sheet thickness, if steel is supplied by the Contractor. Otherwise the weight shall be calculated on the basis on which steel is supplied to the Contractor by the Department.

(d) Unless otherwise specified, weight of cleats, brackets, packing pieces, bolts, nuts, washers, distance pieces, separators, diaphragm, gusset plates (taking overall square dimensions), fish plates etc. shall be added to the weight of respective items.

(e) In riveted work, allowance is to be made for weight of rivet hands. No. deduction shall be made for made for rivet or bolt holes excluding holes for anchor or holding down bolts.

(f) For forged steel and steel casting, weight shall be calculated on the basis of 7850 kg/rn^3.

(g) Unless otherwise specified an addition of 2.5 percent of the weight or the structure shall be made for shop and site rivet heads in riveted steel structures.

(h) Unless otherwise specified, in the case of welded steel structures, no allowance shall be made for the weld metal.

(i) Wedging-up under stanchion bases of steel grillages shall be described and measured by number.

(j) In booking dimensions, order shall be consistent and generally in sequence of length, width and height or depth or thickness.

(k) Dimensions other than cross-sections and thickness of plate shall be measured to nearest 0.001 m.

(l) Areas other than cross sectional measurements shall be worked out to nearest 0.001 m.

(m) Mill tolerance shall be ignored when the weight is determined by calculation.

12.4.2 Individual Items of Work

12.4.2.1 Structural steel work/Steel tube structures

These shall be measured by weight.

12.4.2.2 Welding

The unit of measurement will be in centimetre correct to a cm.

12.5 Rate

The rate shall include the cost of all the materials and labour, involved in all operations for completing the work as per specifications.

The through rates include the carriage of steel for a distance of 100 metres on head load and one Kilometre by mechanical transport. All other leads shall be paid separately depending upon the location of the site of work.

The labour rates include the cost on account of water.

The through rates include the wastage of steel during fabrication.

The rates for hoisting take into account the element of labour cost only. The rates are exclusive of the cost of temporary structures, arrangements for providing counter weight per launching truss/nose and of hire charges of machinery etc. if actually required for hoisting. Wherever such like items are required, additional rates shall be paid on the merits of the individual case. For temporary structures, credit will be afforded for the salvaged materials.

The most economical procedure for hoisting as warranted according to site conditions shall be worked out by the Engineer.

The rate also includes the contractor's profit 10% and overhead charge @ 5%.

13. PLASTERING AND DISTEMPERING WORK

13.1 Materials

The cement mortar to be used shall be as specified in the Work item, and shall be as per the material specifications given in section 8.2.2.5 above.

13.2 General Specifications

13.2.1 Scaffolding

For all exposed work double scaffolding having two sets of vertical supports be provided. The supports shall be sound and strong, tied together with horizontal pieces over which scaffolding planks shall be fixed.

For all other work in buildings, single scaffolding shall be permitted. In such cases, the inner end of the horizontal scaffolding pole shall rest in a hole provided only in header course for the purpose. Only one header for each pole shall be left out. Such holes for scaffolding shall, however not be allowed in pillars/columns less than one meter in width, or immediately near the skew backs of arches. The holes left in masonry works for scaffolding purposes shall be filled and made good before plastering.

For ceiling plaster, stage scaffolding shall be provided. This shall be independent of walls.

Note: In case of special type of work, scaffolding shall be got approved from Engineer in advance.

13.2.2 Tools

Tools shall be used as per IS: 1630-1984, Specifications for accessory tools for plaster work and pointing work.

13.2.3 Preparation of Back Ground

The surface shall be cleaned off all dust, loose mortar droppings, traces of algae, and other foreign matter by water or by brushing. Smooth surfaces shall be roughened by wire brushing, if it is not hard; by hacking if it is hard. In case of concrete surface, if a chemical retarder has been applied to the form work, the surface shall be roughened by wire brushing and all the resulting dust and loose particles cleaned off and care shall be taken that none of the retarders is left on the surface.

For the durability of the plaster, it is of the utmost important to obtain a satisfactory bond between the back ground and the plaster coat and also ensure that the bond is maintained subsequently. Before plastering, the joints of all old brick work or masonry and of all new work in mud shall be raked out with a hook (nor a hammer or tesi) to a depth of 13 mm. New brick work or masonry in lime, or cement mortar, if it is to be subsequently plastered, shall have the joints raked out before the mortar has set. The earth and mortar dust obtained from raking the joints shall be thoroughly washed off, and the work watered for 24 hours before the plaster is applied.

Where plastering is to be done on an old backing, special care shall be taken in preparing the same for a new coat of a plaster. The crumbled layers of backing shall be completely removed and made good. If the backing contains soluble salts particularly sulphates, the application of the plastering shall be done only after the efflorescence of the salts is complete and same is thoroughly removed from surface.

For concrete surface, projecting burrs of mortar formed due to the gaps at joints in shuttering shall be removed. The surface shall be scrubbed clean with wire brushes. In addition concrete surfaces shall be pock marked with a pointed tool, at spacing of not more than 5 cm centres, the pocks being made not less than 3 mm deep, this is to ensure a proper key for the plaster. The surface shall be washed off and cleaned of all oil, grease etc., and well wetted before the plaster is applied.

The backing shall be even in order to avoid variations in the thickness of plasters. Any brickwork or masonry that projects beyond the general face of plaster shall be cut back.

All putlog holes shall be filled up in advance of the plastering, as the scaffolding is being taken down.

13.2.4 Sequence of Operations

For external plaster the plastering operations shall be started from the top floor and carried downwards. For internal plaster, the plastering operations may be started wherever the building frame and cladding work are ready and the temporary supports of the ceiling resting on the wall or the ceiling have been removed.

The surfaces to be plastered shall first be prepared as described in Clause 13.2.3 above.

The first coat shall then be applied to ceilings. After the ceiling plaster is completed and scaffolding for the same removed, the first coat shall be applied on walls. The first coat shall be under coat in case of two or three coat plaster work.

After a suitable time interval as detailed under various types of plaster in subsequent paras depending upon the type of mortar, the second coat shall be applied. Surface of the first under coat shall be adjusted and screeds laid to serve as guides in bringing the work to an even surface. After a further suitable time interval as detailed under various type of plaster in subsequent paras, the finishing coat shall be applied first to the ceilings and then to the walls.

Plastering of cornices, decorative features etc. shall be completed before the finishing coat is applied.

Where corners and edges have to be rounded off, such rounding off shall be completed along with the finishing coat to prevent any joint marks showing out later.

13.2.5 Finish

The plaster shall be laid to a true plain surface and tested frequently with a straight-edge and plumb-bob or the spirit level as the case may be. The straight-edge shall not be less than 3 meters in length. All horizontal lines and surfaces shall be tested with a level, and all jambs and corners with a plumb-bob and a masons square as the work proceeds. All mouldings shall be worked true to template and shall be neat, clean level, and parallel, or truly plumb as the case may be.

13.2.6 Precaution against Discontinuity

To prevent cracking of plaster, caused by discontinuity of backing such as changing from concrete to brickwork or changing from wall to ceiling, a neat cut through the plaster shall be applied at the junction.

13.2.7 Cleanliness and Protection

Adequate protection shall be given to all existing work and fittings, which are liable to be damaged during plastering by covering up with boards, dust sheets etc. as necessary. Care shall be taken to avoid the splashing of mortar on to neighbouring finished surfaces; any such splashes shall be cleaned off immediately. On completion, work affected by plastering operations, shall be left clean.

13.2.8 Defects

Any cracks in the plaster, or parts which sound hollow when tapped, or are found to be soft or otherwise defective after the plaster has dried, shall be cut out in rectangles or squares and re-plastered by the Contractor at his own cost.

Note: Specifications given below for different items are in addition to the general specifications described above.

13.3 Cement Plaster

13.3.1 Cement ceiling plaster

13.3.1.1 Scaffolding

This shall be as per Clause 13.2.1 above.

13.3.1.2 Preparation of surface

The surface shall be prepared as per Clause 13.2.3 above.

13.3.1.3 Mortars

Mortar of the specified mix shall be used.

13.3.1.4 Application

Ceiling plaster shall not be commenced until the slab above has been finished and centering has been removed. In the case of ceilings of roof slabs, plaster shall not be commenced until the terrace work has been completed. These precautions are necessary in order that the ceiling plaster is not disturbed by the vibrations set up in the above operations.

To ensure even thickness and a true surface, gauges of plaster 15 cm x 15 cm shall be first applied at not more than 1.5 m intervals in both directions to serve as guides for the plastering. Surfaces of these gauges areas shall be truly in the plane of the finished plaster surface. The plaster shall then be applied in a uniform surface to a thickness slightly more than the specified thickness and shall then be brought to true and even surface by working a wooden straight edge reaching across the gauges. Finally the surface shall be finished true with a trowel or with wooden float accordingly as a smooth of sandy granular texture is

required. Excess trowelling or overworking of the floats shall be avoided. The plastering and finishing shall be completed within half an hour of adding water to the dry mortar.

13.3.1.5 Finish

The plaster shall be finished to a true and plumb surface and to the proper degree of smoothness as required. The work shall be tested frequently as the work proceeds with a true straight edge not less than 2.5 m long with plumb bobs. All horizontal lines and surfaces shall be tested with a level and all jambs and corners with a plumb bob as the work proceeds.

13.3.1.6 Thickness

The average thickness of plaster shall not be less than 6 mm. The minimum thickness over any portion of the surface shall not be less than 5 mm.

13.3.1.7 Curing

Curing shall be started as soon as the plaster has hardened sufficiently not to be damaged when watered.

The plaster shall be kept wet for a period of at least 7 days. During this period, it shall be suitably protected from all damages at the Contractor's expense by such means as the Engineer may approve. The dates on which the plastering is done shall be legibly marked on the various sections plastered so that curing for the specified period thereafter can be watched.

13.3.2 Cement plaster for slab bearing

13.3.2.1 Cement plaster shall be 6 mm thick of 1:3 (1 cement : 3 sand) mix finished with a floating coat of neat cement and thick coat of lime wash on top of walls for bearing of slabs.

13.3.2.2 Application

The plaster shall be applied over the cleaned and wetted surface of the wall. When the plaster has been brought to a true surface with the wooden straight edge it shall be uniformly treated over its entire area with a paste of neat cement and rubbed smooth, so that the whole surface is covered with neat cement coating. The quantity of cement applied for floating coat shall be 2.2 kg per sqm. Smooth finishing shall be completed with trowel immediately and in no case later than half an hour of adding water to the plaster mix. The rest of the specifications as described below shall apply.

One coat plaster work:

(a) Application

The plaster about 15 cm x 15 cm shall be first applied, horizontally and vertically, not more than 2 metre intervals over the entire surface to serve as gauges. The surfaces of these gauges areas shall be truly in the plane of the finished plaster surface. The mortar than shall be laid on the wall, between the gauges with trowel. The mortar shall be applied in a uniform surface slightly more than the specified thickness. This shall be beated with thapies to ensure through filling of joints, and then brought to a true surface, by working a wooden straight edge reaching across the gauges with small upward and sideways movements at a time. Finally the surfaces shall be finished off true with a trowel or wooden float accordingly as a smooth or a sandy granular texture is required. Excessive trowelling or overworking the float shall be avoided. During the process, a solution of lime putty shall be applied on the surface to make the latter workable. All corners, arrises, angles and junctions shall be truly vertical or horizontal as the case may be, and shall be carefully finished, rounding or chamfering corners, arrises, junctions, etc. shall be carried out with proper templates to the size required.

In suspending the work at the end of the day, the plaster shall be left, cut clean to line both horizontally and vertically. When recommencing the edge of the old work shall be scraped, cleaned wetted with lime putty before plaster is applied to the adjacent areas to enable the two to properly join together. Plastering work shall be closed at the end of the day on the body of the wall and nearest than 15 cm to any corner or arrises. It shall not be closed on the body of features such as plaster bands and cornices not at the corners, or arrises. Horizontal joints in plaster work shall not also occur on parapet tops and copings as these invariably lead to leakages. No portion of the surface shall be left out initially to be patched up later on.

(b) Curing

This shall be started 24 hours after finishing the plaster and shall be kept wet for a period of 7 days. During this period it shall be protected from all damages. The dates

of plastering shall be legibly marked on various sections of the walls so that curing for the specified period thereafter can be watched.

13.3.2.3 Lime wash

This shall be applied in a thick coat after curing the plaster for three days.

13.3.3 Cement plaster on walls etc.

13.3.3.1 Preparation of mortars for plastering

This shall conform to the specification under section 8.2.2.5 above. The mortar of specified proportions shall be used.

13.3.3.2 Application of plaster

This shall conform to the specifications under Clause 13.3.2.2 (a) above except that the beating with thapies shall not be done on the cement plaster and no lime putty solution shall be applied on the face while finishing.

Cement plaster shall be used within half an hour after addition of water. Any mortar or plaster which is partially set shall be rejected and removed forth-with from the site at Contractor's cost. In case of two or three coat plaster the under coat shall be left rough and furrowed 2 mm deep with a scratching tool diagonally both ways to form key for finishing coat. Thickness of each coat shall be as specified.

13.3.3.3 Curing

Each coat shall be kept damp continuously till the next coat is applied or for a minimum period of 7 days. Moistening shall commence as soon as plaster is hardened sufficiently. Soaking of walls shall be avoided and only as much water as can be readily absorbed shall be used. Excessive evaporation on the sunny or windward sides of buildings in hot air dry weather shall be prevented by handing mattings or gunny bags on the outside of the plaster and keeping them wet.

13.4 Measurement

13.4.1 Ceiling Plaster

Ceiling plaster shall be measured under the following classifications.

(a) These shall be measured between the walls or partitions and the dimensions before plastering shall be taken.

(b) Ceiling at a height greater than 5 m shall be so described and shall be measured separately stating the height in stages of 1 metre or part thereof.

(c) Ceiling with projected shall be measured over beams and plastered side of beam shall be measured added to plastering on ceiling.

(d) Spherical and groined ceiling shall each be measured separately.

(e) Soffits of stairs shall be measured as plastering on ceiling. Flowing soffits (viz. portion under spiral stair case etc.) shall be measured separately.

(f) Ribs and mouldings on ceiling shall be measured as for cornices, deduction being made from the plastering on ceiling in case the width/girth of the mouldings exceed 150 mm.

13.4.2 Cement Plaster

13.4.2.1 The description of each item, unless otherwise stated includes wherever necessary, conveyance and delivery, handling, unloading, storing, fabrication, hoisting, all labour for finishing to required shape and size, setting, fitting and fixing in position, straight cutting and waste, return of packing and other incidental charges.

13.4.2.2 Preparation of back ground i.e. cleaning of masonry/concrete surface of all dust, loose mortar drooping traces of algae, efflorescence and other foreign matter and roughing by wire brushing or hacking, as may be required unless otherwise stated in included in the items and shall not be measured and paid for separately.

13.4.2.3 Raking out of joints and trimming off the projections on brick/concrete surface before plastering where necessary shall not be measured and paid for separately.

13.4.2.4 All plastering shall be measured in square meters unless otherwise specified. Length, breadth or height shall be measured correct to 0.01 metres.

13.4.2.5 Thickness of the plaster shall be exclusive of the thickness of the key i.e. grooves or open joints in brick work, stone work etc. or space between laths. Thickness of plaster shall mean the minimum thickness at any point on a surface. Dubbing out shall not be measured and paid for in the case of new work nor for rough surface of old brick/stone masonry work

where the face is in plumb as the rates for plastering includes for the necessary dubbing to such surfaces.

13.4.2.6 The measurement of wall plastering shall be taken between the walls or partition (dimensions before plastering being taken) for length and from the top of floor or skirting to ceiling for height. Depth of coves or cornices if any shall be deducted.

13.4.2.7 Plastering in isolated width or in widths not forming part of general plastering work (as in bands, cornices, sunk panels etc.) shall be measured as below:

(a) 300 mm or below in width/girth in running meters.
(b) Width/girth above 300 mm in square meters.

13.4.2.8 Plastering at height greater than 10 metres above ground/datum level shall be measured separately in stages of 5 metres height except interior plastering in case of building which shall be measured for each storey.

13.4.2.9 A coefficient of 1.63 shall be adopted for the measurement of one side plastering on honey comb work having 6 cm x 10 cm opening.

13.4.2.10 Soffits of stairs shall be measured as plastering on ceilings. Flowing soffits shall be measured separately.

13.4.2.11 Sides of plasters, projections etc. shall be added to plaster on walls.

13.4.2.12 Mouldings, architraves, ceiling ribs, cornices and the like, on plasters and around opening etc. shall be measured separately as specified in 13.4.2.7 above. Length shall be measured in running metres at the centre of girth. Girth shall be measured along curve of moulding.

13.4.2.13 Moulded cornices and coves shall be measured in squared metres, the area being arrived at by multiplying length by girth.

13.4.2.14 Flat or weathered top to cornices when exceeding 15 cm in width shall not be included in the girth but measured with the general plaster work.

13.4.2.15 Deductions

For jambs, soffits, sills, etc., for openings not exceeding 0.5 m^2 each in area, for ends of joints, beams, posts, girders, steps, etc. not exceeding 0.5 m^2 in each area, deductions and additions shall be made in the following manner:

(a) No deductions shall be made for ends of joints, beams, posts, etc. and openings not exceeding 0.5 m^2 each and no addition shall be made for reveals, jambs, soffits, sills etc. of these openings nor for finish to plaster around ends of joints, beams, posts etc.

(b) Deductions for openings exceeding 0.5 m^2 but not exceeding 3 m^2 each shall be made as follows and no addition shall be made for reveals, jambs, soffits, sills, etc. of these openings.

  (1) When both faces of wall are plastered with same plaster, deduction shall be made for one face only.

  (2) When two faces of wall are plastered with different types of plasters or if one face is plastered and the other pointed, deduction shall be made from the plaster or pointing on the side of frame for door, window, etc. on which width of reveals is less than that on the other side but no deduction shall be made on the other side. Where widths of reveals on both faces of wall are equal, deduction of 50% of area face shall be made from areas of plaster and/or pointing as the case may be.

  (3) When only one face is plastered and the other face is not, full deduction shall be made from plaster if width of reveal on plastered side is less than that on unplastered side, but if widths of reveal on both sides are equal or width of reveal on unplastered side is more no deduction shall be made.

  (4) For openings having door frames equal to or projecting beyond the thickness of wall, full deduction for opening shall be made from each plastered face of the wall.

(c) In case of openings of area above 3 m^2 each, deduction shall be made for opening but jambs, soffits and sills shall be measured.

(d) Different quantities of plastering referred to this para shall not include "Plastering with terrazzo finish" as the method of measurement in this case is different. In such cases where the plaster on the other face consist of a plaster with terrazzo finish. Method of addition and deductions for the ordinary plaster face shall be regulated as if that face alone is plastered and the other is given an entirely different type of non-comparable treatment.

Note: In calculating areas of openings the extra width of rebated reveals, if any, shall be excluded.

13.4.2.16 Plastering on ceilings and walls shall be measured separately.

13.4.2.17 Circular work not exceeding 6 metres in radius shall be measured separately from wall plaster.

13.4.2.18 Fair joints and cutting to edges shall not be measured separately.

13.5 Rate

The labour rate includes the cost of all materials and labour required for completing the work as per specifications.

1) The labour rates and through rates include carriage up to 100 metres on head load and one kilometer by mechanical transport.
2) The labour rates include the sundry items like sand, papers scrappers, soap and soda etc., as also the water charge.
3) The labour rates also include the labour required for thoroughly mixing the mortar and all sorts of scaffolding and ladders etc.
4) The specialty paints shall be the paints which are declared as such by Chief Engineer, Himachal Pradesh Public Works Department.

All items shall be paid as per latest applicable HPPWD Schedule of Rates. The rate also includes contractor's profit @ 10% and overhead charges @ 5%.

13.6 Oil Bound Washable Distemper Work

13.6.1 Scaffolding

Whenever scaffolding is necessary, it shall be erected in such a way that as far as possible no part of scaffolding shall rest against the surface to be white or colour washed. A properly secured and well tied suspended platform (JHOOLA) may be used for white washing and colour washing / distempering. Where ladders are used, pieces of old gunny bags shall be tied at top and bottom to prevent scratches to the walls and floors. For white washing or colour washing/distempering of ceiling, proper stage scaffolding shall be erected, where necessary.

13.6.2 Preparation of surfaces

Specification as given below shall be applicable except that any unevenness shall be made good by applying putty, made of Plaster of Paris mixed with water on the entire surface including filling up the undulation and then sand papering the same after it is dry:

(a) Undecorated surfaces: The surfaces shall be thoroughly brushed free from dust, dirt, grease, mortar droppings and other foreign matter and sand-papered smooth. New plaster surface shall be allowed to dry for at least 2 months, before applying distemper.
(b) Decorated surfaces: All loose pieces and scales shall be removed by sand-papering and surface shall be cleaned of all grease, dust, etc. Where heavy scaling has taken place, the entire surface shall be scraped by means of steel scrapers so as to remove all accumulated distemper leaving clean surface.
(c) General: All necessary nails shall be removed. Pitting in plaster shall be made good with Plaster of Paris mixed with dry distemper of colour to be used. The surface shall then rubbed down again with a fine grade sand-paper and made smooth. A coat of the distemper shall be applied over the patches. The surfaces shall be allowed to dry thoroughly before the regular coat of distemper is allowed.
(d) The surface affected by efflorescence, moulds, moss, fungi, algae, lichen etc. shall be treated in accordance with IS: 2395 (Part 1)-1994 before applying white wash or colour wash/distemper which is briefly explained hereunder.

Local areas affected by efflorescence shall be cut out and re-plastered. In case the area is not to be cut and re-plastered, then the treatment with metal foil to prevent the absorption of water from exterior or the penetration of water into the interior shall be done as under:

The area to be treated shall be cleaned of dust and allowed to dry prior to the application by means of a thin coat of bitumen primer conforming IS: 3384-1986 (Specification of bitumen primer for use in water proofing and damp-proofing). Brown type bitumen (Penetration 10 to 20) conforming to IS: 702-1988 (Specification for industrial bitumen, revised), shall be hot applied by brush at a temperature of 115° C to the surface at the rate of approximately 1.5 kg/m^2.

The following remedial measures shall however be adopted for the prevention of efflorescence:

Sealing coats may not effectively hold back strong efflorescence. Dry brushing of the growth as it appears is the only remedy. Efflorescent salts shall not be removed by washing with water as it may carry some of the salts back into the pores. On re-drying, efflorescence may be even worse than before if the salts were still present in the structure. Efflorescence will continue as long as there is sufficient water in the structure or plaster backings to carry the soluble salts forward and it is unless to attempt to seal the moisture by the paint film on the surface. The treatment of an old wall with hydrofuge silicone will frequently stop the efflorescence as the liquid blocks the passage for movement of moisture. In the case of efflorescence due to the rising of salt solutions through capillary action from sub-soil the only remedy is to provide bitumen or metallic seals in the walls above the ground level so that an effective barrier to the capillary action is created.

The growths of vegetation such as Moulds, Fungi, Algae, Lichens etc., shall be removed and ammonia Cal copper solution applied to the surface.

A recommended composition and concentration of the ammonia Cal wash shall consist of 7 g of copper carbonate dissolved in 80 ml liqueur ammonia and diluted to one litre with water. Alternatively, 2.5 percent magnesium silicofluoride solution may be used.

This shall be allowed to dry thoroughly before painting. To prevent recurrence of mould growth on repainted surfaces the following procedure shall be adopted:

a) Remove the source of dampness and dry out the walls;
b) Improve ventilation, if necessary;
c) Remove the infected paint or paper; and
d) Sterilize the surface by applying an antiseptic wash, such as 2 percent sodium penta-chlorophenate or any other proprietary material and allow to dry.

In case of decorated surfaces already dry distempered and required for applying oil bound distempers, the distemper whether in good or bad condition shall be removed completely by washing even to the last trace and allowed to dry completely and then sand prepared smooth as per Clause 13.6.2(c) above.

13.6.3 Primer coat

The primer where used as on undecorated surfaces shall be alkali resistance primer or distemper primer as specified in the item. These shall be of the same manufacturer as oil bound distemper. 0.81 litre of distemper primer shall be used for an area of 10 sqm for each coat.

If the wall surface plaster has not dried completely, alkali resistance primer shall be applied before distempering the walls. But if the distempering is done after the wall is dried completely, distemper primer shall be applied.

Primer shall be applied with a brush on the clean dry and smooth surface. Horizontal strokes shall be given first and vertical strokes shall be applied immediately afterwards. This entire operation will constitute one coat. The surface shall be finished as uniformly as possible leaving no brush marks. It shall be allowed to dry for at least 48 hours before, oil bound distemper or paint is applied. However, oil bound distemper is not recommended to be applied within six months of the completion of wall plaster. For decorated surfaces, no primer is necessary.

13.6.4 Preparation of oil bound distemper

The distemper shall be diluted with water or any other prescribed thinner in a manner recommended by the manufacturer. Only sufficient quantity of distemper required for day's work shall be prepared. 0.81 litre of distemper shall be used for area of 10 sqm.

For undecorated surfaces 1.5 kg of distemper shall be used for two coats for an area of 10 m^2. For decorated surfaces, 1 kg of distemper shall be used for one coat for an area of 10 m^2. For every additional coat, 1 kg of distemper shall be used for an area of 10 m^2.

13.6.5 Application of distemper coat

For undecorated surfaces, after primer coat has dried for at least 48 hours, the surface shall be lightly sand-papered to make it smooth receiving the distemper, taking care not to rub out the priming coat. All loose particles shall be dusted off after rubbing. Minimum two coats of distemper shall be applied with brushes in horizontal strokes followed to immediately by vertical which together shall constitute one coat. The subsequent coats shall be applied after a time interval of at least 24 hours between consecutive coats to permit of the proper drying of the preceding coat. For decorated surfaces, the distemper shall be applied in one coat or more over the prepared surface in the same manner as for undecorated surfaces.

The finished surface shall be even and uniform without patches, brush marks, distemper drops etc.

Sufficient quantity of distemper shall be mixed to finish one room at a time. The application of a coat in each room shall be finished in one operation and no work shall be started in any room, which cannot be completed the same day.

15 cm double bristled distemper brushes shall be used. After each day's work, brushes shall be thoroughly washed in hot water with soap solution and hung down to dry. Old brushes which are dirty and cracked with distemper shall not be used on the work.

13.6.6 Protective measures

Surface of doors, windows, floors, articles of furniture, etc. and such other parts of the building not to be white washed or colour washed/distempered shall be protected from being splashed upon such surfaces. It shall be cleaned of whitewash or colour wash/distemper splashed, if any by the Contractor at his own cost.

13.6.7 Measurements

The measurements shall be done as below.

13.6.7.1 Priming and alkali resistant treatments, scraping of surfaces, washing the surfaces spoiled by smoke soot, removal of oil and grease spots, treatment for infection with efflorescence, moulds, moss, fungi, algae and lichen, and patch repairs to plaster above 0.10 sqm wherever done, shall be measured separately.

13.6.7.2 Work on walls, ceilings, and/or sloping roofs shall each be measured separately.

13.6.7.3 Work on decorated surfaces shall be measured separately.

13.6.7.4 All work shall be measured net in the decimal system as in places, subject to the following limits unless otherwise stated hereinafter.

(a) Dimensions shall be measured to the nearest 0.01 m.

(b) Areas in individual items shall be worked out to the nearest 0.01 m^2.

13.6.7.5 All work unless and otherwise stated shall be measured in square meters.

13.6.7.6 Deductions

For jambs, soffits, sills, etc.: For openings n5ot exceeding 0.5 sqm each in area; for ends of joints, beams, posts, girders, etc. not exceeding 0.5 sqm in area and for opening exceeding 0.5 sqm and not exceeding 3 sqm each in area. Deductions and additions shall be made in the following manner:

No deductions shall be made for ends of joists, beams, posts, etc., and openings not exceeding 0.5 sqm each and no addition shall be made for reveals, jambs, soffits, sills etc. of these openings nor for finish around ends of joists, beams, posts etc.

Deductions for openings exceeding 0.5 sqm but not exceeding 3 sqm each, shall be made as follows and no addition shall be made for reveals, jambs, soffits etc. of these openings.

(a) When both the faces of the wall are provided with the same finish, deduction shall be made for one face only.

(b) When each face of wall is provided with a different finish, deduction be made for that side of frame for door, window etc. on which width of reveal is less than that of the other side but no deduction shall be made on the other sides; where widths of reveals on both faces of wall are equal, deduction of 50% of opening on each face shall be made from area of finish.

(c) When only one face of the wall is treated and the other face is not treated, full deduction shall be made if the width of the reveal on the treated side is less than that on untreated side, but if width of the reveal is equal or more than that on the untreated side, neither deductions nor addition be made for reveals jambs, soffits, sill, etc.

13.6.7.7 In case of openings of areas exceeding 3 sqm each deduction shall be made for openings, but jambs, soffits and sills shall be measured.

13.6.7.8 No deductions shall be made for attachment such as casings, conduits, pipes, electric wiring and the like.

13.6.7.9 Corrugated surfaces shall be measured flat as fixed and not girthed. The quantities so measured shall be increased by the following percentages and the resultant shall be included with the general areas.

(a) Corrugated steel sheets	14%
(b) Corrugated asbestos cement sheets	20%
(c) Semi-corrugated asbestos cement sheets	10%

(d) Nainital pattern roofs (Plain sheeting with rolls)	10%
(e) Nainital pattern roofs with corrugated sheets	25%

13.6.7.10 Cornices and other wall features, when they are not picked out in a different finish/colour, shall be girthed and included in the general area.

All items shall include removing nails, making good holes, cracks, patches etc. not exceeding 0.1 sqm each with material similar in composition to the surface to be prepared.

13.6.8 Rate

The labour rate includes the cost of all materials and labour required for completing the work as per specifications.

1. The labor rates and through rates include carriage up to 100 metres on head load and one kilometer by mechanical transport.
2. The labour rates include the sundry items like sand, papers scrappers, soap and soda etc. as also the water charge.
3. The labour rates also include the labour required for thoroughly mixing the mortar and all sorts of scaffolding and ladders etc.
4. The specialty paints shall be the paints which are declared as such by Chief Engineer, Himachal Pradesh Public Works Department.

All items shall be paid as per latest applicable HPPWD schedule of rates. The rate also includes contractor's profit @ 10% and overhead charges @ 5%.

14. WOOD WORK INCLUDING GLAZING AND FITTINGS

14.1 Materials

14.1.1 Timber

For general specifications of timber refer section 7.2.1.1 above.

14.1.1.1 Type of Timber

14.1.1.1.1 Deodar Wood

14.1.1.1.1.1 1st Class Deodar Wood

The timber shall be of very good quality well-seasoned and free from defects such. as cracks, dead knots, shakes, sapwood etc. No individual hard and sound knot shall be more than 6 sqcm in size, and the aggregate area of such knots shall not be more than 1% of the area of the piece. The timber shall he of uniform colour and shall have reasonably straight grains. There shall be at least 4 growth rings per cm width, in cross-section.

14.1.1.1.1.2 2nd Class Deodar Wood

The timber shall be of good quality well-seasoned and free from defects such as, dead knots, cracks, shakes sapwood etc. However, traces of sapwood shall be allowed. No individual hard and sound knot shall be more than 15 sqcm in size and the aggregate area of such knots shall not be more than 2% of the area of the piece. The timber shall be of fairly uniform colour with reasonably straight grains. There shall be at least 3 growth rings per cm width in cross-section.

14.1.1.1.2 Teak Wood

14.1.1.1.2.1 1st Class Teak Wood

The timber shall be of high quality and well-seasoned. It shall have uniform colour, free from defects such as cracks, dead knots, shakes, sapwood etc. No individual hard and sound knot shall be more than 6 sqcm in size and the aggregate area of such knots shall not be more than 1% of the area of the piece. The timber shall be closed grained having not less than 2 growth rings per cm width in cross-section.

14.1.1.1.2.2 2nd Class Teak Wood

The timber shall be of good quality well-seasoned and free from defects such as cracks, dead knots, shakes, sapwood etc. No individual hard and sound knot shall be more than 15 sqcm in size and the aggregate area of such knots shalt not exceed 2% of the area of the piece. The timber shall be fairly close grained having not less than 2 growth rings per cm width in cross-section.

14.1.1.2 Maximum permissible moisture content in timber used for various building works

14.1.1.2.1 The maximum permissible percentage of moisture content for well-seasoned timber used in building work shall be as specified in the IS: 287-1993. This percentage varies from place to place depending on the average annual relative humidity of the place. As per the

above IS Code India has been divided into four zones and the corresponding values for these plates is given in the table below.

Maximum permissible moisture content (percentage)

Timber used in building works	Zone I AARH (less than 40%)	II AARH (40-50%)	Zone III AARH (50-67%)	Zone IV AARH (above 67%)
50 mm & above in thick	10	12	14	16
Thinner than 50mm.	8	10	12	14

Note: AARH - Average Annual Relative Humidity.

14.1.1.2.2 The method of determining the moisture content shall be in accordance with Appendix A of IS: 287-1993 which is reproduced below:

The test section obtained in accordance with IS: 287-1993 Para A.1.1 shall be weighed immediately after cutting on a balance the sensitivity of which' is not less than 10 mg. They shall then be dried (see note below) in a ventilated and preferably thermally controlled then at a temperature of 100° C to 105° C until a constant weight is obtained. The weight of the test section shall be deemed to have become constant if successive weighing at intervals of 2 to 5 hours do not differ from one another by more than 50 mg. The last weight shall be taken to be the oven dry weight of the test section.

The percentage moisture content = $((W_1—W_2)/W_2) \times 100$, where,

W_1 = initial weight of test section, and

W_2 = oven-dry weight of test section.

Note: When timber contains an abnormally high percentage of resinous materials or has been impregnated with such substance as creosote the oven-drying method is liable to be fairly considerable in accuracy as portion of the weight lost in oven-drying has been due to the volatilization of material other than water. In such circumstances, distillation method requiring relatively elaborate laboratory equipment is necessary to determine the moisture content.

In case cutting of a test section from the piece is not permissible the moisture content in the whole section can also be determined by making a boring to an auger and collecting the sample in a pre-weighed weighing bottle which should then be securely stoppered. After determining the wet weight of the boring sample, it shall be oven-dried, weighed and its moisture content calculated in the manner as indicated above.

14.1.1.2.3 The electrical method of testing moisture content described in Para A-2 of IS: 287-1993 may also be followed subject to the species correcting values given thereunder.

14.1.1.2.4 Tolerances in maximum permissible limits of moisture content for use in building works

Seasoned timber (whether air-dried or kiln-dried) shall be cleaned to conform to the moisture content requirement of this specification if the average moisture content of all the samples from a given lot is within ± 3 percent and the moisture content of individual sample is within + 5 percent of the maximum permissible moisture content indicated in table given above, provided, however, in the case of timber sections of thickness less than 50 mm there tolerance limits shall be + 2 and + 3 respectively.

14.1.1.3 Storage

After selection and prior to fabrication and or erection, timber shall be stored in such a manner so as to prevent decay and other defects. The storage shall be such that the timber is protected from fire hazard. The recommended practice for storing timber as given in IS: 1141-1993 shall be adopted.

14.1.1.4 Sawing

All scantlings, planks etc. shall be sawn straight and of uniform thickness and of full measurements from end to end and shall be sawn in the direction of the grain. All planks and scantlings shall be sawn 1.5 mm in excess of actual measurements to allow of planing.

14.1.1.5 Inspection

Timber shall not be bought until inspected and approved by the Assistant Engineer.

14.1.1.6 Rate

The rate for timber is for the scantlings or sleepers of standard dimensions. No allowance is to be made for wastage in making sleepers or scantlings out of logs. Where the timber

has been felled by the Contractor, he is responsible for the proper observance of all forest, municipal or other rules or bye-laws and for such royalty or other dues as may accrue.

14.1.2 Fittings

14.1.2.1 General

Fitting shall be of iron, brass, aluminium or as specified. These shall be well made, reasonably smooth, and free from sharp and corners, flaws and other defects. Screw holes shall be counter sunk to suit the head of specified wood screws. These shall be of the following type according to the material used.

(a) Iron Fittings: These shall be black enamelled or copper oxidised (black finish) or as specified.

(b) Brass Fittings: These shall be finished bright chromium plated or oxidised or as specified.

(c) Aluminium Fittings: These shall be anodised.

The fittings generally used for different type of doors and windows are indicated in the table. The fittings to be actually provided in a particulars work shall however determined.by be the Engineer.

Screws used for fittings shall be of the same metal, and finished as the fittings. However, Chromium plated brass screws shall be used for fixing aluminium fittings. These shall be of the size as indicated in respective figures.

Fittings shall be fixed in proper position as shown in the drawings or as directed by the Engineer. These shall be truly vertical or horizontal as the case may be. Screws shall be driven home with screw driver and not hammered in, Recesses shall be cut to the exact size and depth for the countersinking or hinges.

14.1.2.2 Butt Hinges

These shall be of the following types according to the material used, and as specified:

(a) Mild Steel butt hinges (Medium)

(b) Cast brass butt hinges light/ordinary or heavy.

(c) Extruded aluminium alloy butt hinges.

14.1.2.2.1 Mild steel butt hinges (medium) [refer Fig. 24]

14.1.2.2.1.1 These shall be medium type manufactured from M.S. sheet. These shall be well made and shall be free from flaws and defects of all kinds. All hinges shall be cut clean, and square and all sharp edges and corners shall be removed. These shall conform to IS: 1341-1992.

Hinge pin shall be made of mild steel wire. It shall fit inside the knuckles firmly and rivetted head shall be well formed so as not to allow any play or shake, and shall allow easy movement of the hinge, but shall not cause looseness.

Knuckles:

The number of knuckles in the hinges of different sizes shall be as indicated in Fig. 24. The size of knuckles shall be straight and at right angle to the flap. The movement of the hinges shall be free and easy and working shall not have any play or shake.

Screw holes:

The screw holes shall be clean and counter sunk. These shall be suitable for counter sunk head wood screws and of the specified size for different types and sizes of hinges. The size of the holes shall be such that when it is counter sunk it shall be able to accommodate the full depth of counter sunk head of the wood screws.

14.1.2.2.1.2 Sampling and Criteria for Conformity

The number of butt hinges to be selected from a lot shall depend on the size of lot and shall be in accordance with table below.

Butt hinges for testing shall be taken at random from at least 10 percent of the package subject to a minimum of three equal number of hinges being selected from each package. All butt hinges selected from the lot shall be checked for dimensional and tolerance requirements. Defects in manufacture and finish shall also be checked. A lot shall be considered conforming to the requirements of this specification, if the number of defective hinges along those tested does not exceed the corresponding number given in table below.

Lot size	Sample size	Permissible No. of defective hinges
Up to 200	15	0

Lot size	Sample size	Permissible No. of defective hinges
201 to 300	20	1
301 to 500	30	2
501 to 800	40	2
801 and above	55	3

Note: Any hinge which fails to satisfy the requirements of any one or more of the characteristics shall be considered as defective hinge.

14.1.2.3 Door Bolts

14.1.2.3.1 Sliding Door Bolts (Aldrops) [refer Fig. 25]

14.1.2.3.1.1 These shall be of mind steel, cast brass, aluminum or as specified, and shall be capable of smooth sliding action.

14.1.2.3.1.2 M.S. Sliding Door Bolts

These shall be made of M.S. sheets and M.S. rods and shall conform to IS: 281-2009. M.S. Sliding door bolts shall be copper oxidised (black finish) or as specified.

14.1.2.3.1.3 Cast Brass Sliding Door Bolts

These shall be made from rolled brass, and shall conform to IS: 2681-1993. The hasp shall be of cast brass and secured to the bolt as shown in Fig. 25. Alternatively, the hasps and the bolt may be cast in one piece. The fixing and staple bolts shall be cast with 6 mm studs bolts shall be finished to shape and have thread ends and provided with round wormers and nuts of square or hexagon type. All components shall be finished smooth and polished before assembly. Cast brass sliding bolts shall be finished bright or chromium plated or oxidised or as specified.

14.1.2.3.1.4 Aluminium Sliding Door Bolts

These shall be made of aluminum alloy, and shall conform to IS: 2681-1993. Aluminum sliding door bolts shall be anodised. All screw holes shall be counter sunk to suit the counter sunk head of wood screws of specified sizes. All edges and corners shall be finished smooth. In case of single leaf door, when iron socket plate or a brass or aluminum fixing bolts (or slinging door bolts) cannot be fixed, hole of suitable size shall be drilled in the door frame and an iron or brass plate cut to shape shall be fixed at the face of the hole. The leading dimensions of the sliding door bolts are illustrated in Fig. 25.

14.1.2.3.1.5 Sampling and Criteria for Conformity

It shall be same as specified in section 14.1.2.2.1.2 above.

14.1.2.3.2 Tower Bolts (refer Fig. 26)

14.1.2.3.2.1 Tower bolts shall be well made and shall be free from defects. The bolts shall be finished to the correct shape and shall have a smooth action. All tower bolts made with sheets 1.2 mm thickness and above shall have counter sunk screw holes to suit counter sunk head wood screws. All sharp edges and corners shall be removed and finished smooth.

The height of top of tower bolt when the door window etc. is in closed position from the floor level shall be 1.90 meters.

14.1.2.3.2.2 Tower bolts shall be of the following types:

(a) Aluminium barrel tower bolts with barrel and bolt of extruded sections of aluminium alloy. The knob shall be properly screwed to the bolt and riveted at the back.

(b) Brass tower bolts with cast brass barrel and rolled or cast brass bolt

or

Brass tower bolts with barrel of extruded sections of brass and rolled or drawn brass bolt.

The knobs of brass tower bolts shall be cast and the bolt fixed with knob, steel spring and ball shall be provided between the bolt and the barrel.

(c) Mild steel barrel tower bolts with mild steel barrel and mild steel bolt.

or

Mild steel tower bolts with mild steel barrel and cast iron bolts. The plates and straps after assembly shall be firmly riveted or spot welded. The rivet head shall be properly formed and the rivet back shall be flush with the plate. These shall be made of one piece.

14.1.2.3.2.3 Unless otherwise specified bolt shall have finish as given under:

(a) Mild steel tower bolts (types 1 and 2). Bolts bright finished or plated as specified and barrel socket stove enameled black.

(b) Brass tower bolts (types 3 to 5) bolts and barrel polished or plated as specified.

(c) Aluminium alloy tower bolts (type 6) bolts and barrel anodised. The anodic film may be either transparent or dyed as specified. The quality of anodised finished shall not be less than grade AC 10 of IS: 1868-1996.

14.1.2.3.2.4 Sampling and Criteria for Conformity

It shall be same as specified in section 14.1.2.2.1.2 above.

14.1.2.4 Mortice Lock and Latch

14.1.2.4.1 The size of the mortice lock shall be denoted by the length of the body towards face and it shall be 65 mm, 75 mm and 100 mm as specified and directed by the Engineer. The measured length shall not vary more than 3 mm from the length specified for the size.

14.1.2.4.2 Non-interchangeable Keys

The mortice locks shall be manufactured to have non-interchangeable keys. For the purpose of testing two lever locks three locks from each batch of 50 locks shall be so selected that the words of the keys differ from each other slightly. If the key of any of the locks opens any other locks amongst the selected locks, the whole lot shall be rejected. When the locks have more than two levers, 5 locks may be selected from a batch of 60 locks and tested for interchangeability.

14.1.2.4.3 Lock

The clear depth of the body shall not be more than 15mm. The force-end shall be firmly fitted to the body by suitable counter sunk head machine screw. The locking bot shall be of specified material and of section not less than 8 x 25 mm for all sizes of locks. If made as tow piece construction both parts shall be riveted. Ordinary lever mechanism shall be provided with not less than two levers but false levers shall not be used. Pair of lever shall weight not less than 0.50 kg and each shall be fitted with one spring of phosphor bronze or steel wire, and shall withstand the following tests without showing any sign of permanent set.

(a) The liver spring shall be pressed down so as to touch the top edge of the liver and released. This shall be repeated six times.

(b) The lever shall not stand a transverse load of 15 kg before the failure of the joint between the lever and the spring takes place.

Note: The lever shall be rigidly held flat and a point load of 15 kg applied to the spring gradually, the spring shall withstand the total load before the final failure of the joint between lever and the lever spring occurs.

14.1.2.4.4 Keys

Each lock shall be provided with two keys, the keys shall function smoothly.

14.1.2.4.5 Latch

Mortice latch, with one head bolt and a pair of lever handless shall have steel casing and brass bolt shall be right or left handed as shown in the drawings or as directed by Engineer. It shall be of the best make of approved quality. The latch for single leaf door shall have plain face and that of double leaf door a rebated face. Latch bolt shall be of material specified. End bolt shall be reversible. The bolt shall not project from the face of the force-end of the lock. The section of the bolt shall not be less than 12 x 16 mm for all sizes of lock. Each latch bolt shall be fitted with one spring which shall be phosphor bronze or steel wire. The latch spring shall withstand the test as for lever spring without any sign of permanent set.

14.1.2.4.6 Sampling and Criteria for Conformity

It shall be same as specified in section 14.1.2.2.1.2 above.

14.1.2.4.7 Tests

The finally assembled lock shall be tested as prescribed below.

Tests for Mortice Locks

The finally assembled lock shall withstand the tests. The locking bolt shall be first locked in the forward position. A load of 40 kg shall be applied without shock in the direction perpendicular to securing face as well as on both the locking faces of protruding bolt in turn. Then the load shall be applied by means of a fixed steel board 3 mm thick by an arrangement for the purpose of this test as shown in Fig. 27.

When the spindle with handle is inserted into hole in the follower and turned, the latch bolt shall draw smoothly into the lock body and shall be within one millimeter from the face of the force-end.

When the latch bolt is pressed into the lock body by pressure, the action shall be smooth and when fully pressed the latch bolt shall not project more than one millimeter from the face of the force-end,

When a key is inserted in key bole from one side of the lock and turned to withdraw the locking bolt the action shall be smooth and without impediment. When the direction of turn is reversed to lock the locking bolt then also the action shall be smooth and without impediment. In the locked position the locking bolt shall project 12 mm from the face of the force-end, although one millimeter free movement is permissible. In the withdrawn position, the locking bolt shall not project more than one millimeter from the face of the force-end. The locking bolt shall be worked by turning key in both the directions 6000 times. At the end of the test, the lock shall continue to work smoothly.

The test shall be repeated with the key inserted from the other side of the lock.

Note: The clearance for levers while in the operating condition shall not exceed 0.25 mm.

When the key is turned to lock the locking bolt at the same time applying a reasonable pressure by finger on it, after completion of the key rotation the locking bolt shall be positively locked in the forward position. This test shall be repeated with the key inserted from the other side of the lock.

14.1.2.5 Door Handles (refer Fig. 28)

14.1.2.5.1 The door handles be well made free from defects. These shall be finished correct to shape and dimensions. All edges and corners shall be removed and finished smooth so as to facilitate easy handling. Cast handles shall be free from casting defects. Where the grip portion of the handle is joined with the piece by mechanical means, the arrangements shall be such that the assembled handle shall have adequate strength comparable to that of integrally cast type handles.

14.1.2.5.2 Door handles shall be of the following types according to the material used.

(a) Cast Aluminium Handles

These shall be of aluminium of specified size, and of shape and pattern as approved by the Engineer. The size of the handle shall be determined by the inside grip of the handle. Door handles shall be of 100 mm size, and window handles of 75 mm unless otherwise specified. These shall be fixed with 25 mm long wood screws of designation No. 6. Aluminium handles, shall be anodized and the anodic consisting shall not be less than grade AC 15 of IS: 1868-1996 or as specified.

(b) Cast Brass Handles

These shall be cast brass of specified size and the shape and pattern as approved by the Engineer. These shall conform to IS: 208-1996. The size of the handle shall be determined by the inside grip of the handle. Door handles shall be of 100 mm size and window handles of 75 mm size unless otherwise specified. These shall be fixed with 25 mm long wood screws of designation No. 6. Brass handles shall be finished bright or chromium plated or oxidised or as specified.

(c) Mild Steel Handles

These shall be of mild steel sheet, pressed into oval section. These shall conform to Indian Standard specifications for door handles IS: 208-1996. The size of the handles will be determined by the inside grip of the handle. Door handles shall be of 100 mm size and window handles of 75 mm size unless otherwise specified. These shall be fixed with 25 mm long wood screws of designation No. 6. Iron handles shall be copper oxidised (black finish) or as specified.

14.1.2.5.3 Sampling and Criteria for Conformity

It shall be same as specified in section 14.1.2.2.1.2 above.

14.1.2.6 Floor Door Stopper (refer Fig. 29)

This shall be made of cast brass of overall size as specified and shall have a rubber cushion. The shape and pattern of stopper shall be approved by the Engineer. It shall be of brass finished bright, chromium plated or oxidised or as specified. The size of floor stopper shall be determined by the length of its place. It shall be well made and shall have four counter sunk holes for fixing the door stoppers to the floor by means of wood screws. The body or housing of the door stopper shall be cast in one piece and it shall be fixed to the

cover plate by means of brass or mild steel screws and cover plates shall be of casting or of sheet metal. The spring shall be fixed firmly to the pin. Tongue which would be pressed while closing or opening of the door shall be connected to the lower part by means of copper pin. On the extreme end a rubber piece shall be attached to absorb shocks. All parts of the door stopper shall be of good workmanship and finish, burrs and sharp edges removed. It shall be free from surface and casting defects. Aluminium stopper shall be anodized and anodic film shall not be less than grade AC 10 of IS: 1868-1996. The rubber for the floor door stopper shall meet the following requirements.

Requirements for Rubber

Particulars	Requirements	Testing Procedure
Relative density (Max.)	1.3	IS: 3400 (Part 9)-2004
Hardness	60 $\pm$ 5	IS: 3400 (Part 2)-2004
Change in initial hardness ageing for 24 hours at $100^{o} \pm 1^{o}$ C	$\pm$ 5	IS: 3400 (Part 2)-2004

These shall be of cast brass, finished bright, chromium plated or as specified. Aluminium stopper shall be anodized and the anodic coating shall not be less than grade AC 10 of IS: 1868-1996. The size and pattern of the door stopper shall be approved by the Engineer. The size shall be determined by its length.

Sampling and Criteria for Conformity:

It shall be same as specified in section 14.1.2.2.1.2 above.

14.1.2.7 Hooks and Eyes (refer Fig. 30)

These shall be mild steel or hard drawn brass or as specified. Mild steel hooks and eye shall be copper oxidised (black finish) or as specified. Cast brass hooks and eyes shall be finished bright or chromium plated. These shall be well made and free from defects. They shall be finished to the correct shape and dimensions so as to function properly when they are in use. Cast hooks, eyes and plates shall be free from casting and other defects. All these shall conform to IS: 207-1964. All size of hooks and eyes should be determined by the length of the hooks measured out-to-out. Unless otherwise specified the articles shall be finished bright.

14.1.2.8 Helical Door Spring

Helical door spring of size as specified and of superior quality, as approved and as directed by the Engineer shall be provided and fixed complete as per requirements.

14.2 General Specifications

14.2.1 Working

All woodwork shall be neatly and truly finished to the exact dimensions required, wood work which will be exposed to view when the work is complete, shall be accurately planed to the required dimensions. A tolerance of (1.6mm) shall be allowed for nominal dimensions of structural timber. Where dimensions are specifically mentioned as net dimensions, no such tolerance shall be permissible.

14.2.2 Joints

Unless otherwise specified, all joints shall be simple tenon and mortise joints with the end of the tenon exposed to view. All mortise and tenon or scarfs shall fit truly and fully, without filling. Where specified in the case of special high class joinery, the end of tenon shall not Show. The Contractor shall observe the following principles in forming joints:

(i) to cut the joints and arrange the fastenings, so as to the pieces of timber they connect, as little as possible get weak;

(ii) to place each abutting surface in a joint as nearly as possible, perpendicular to the pressure, which it has to transmit; and

(iii) to form and fit accurately every pair of surfaces that come in contact.

The joints shall be painted with white or red lead before the frames are put together.

14.2.3 Screws and nails

Holes of correct sizes shall be drilled before inserting screw driving in or starting in screws with a hammer is prohibited. All screws shall be dipped in oil before being inserted in the wood. When owing to the nailing arrangement or to the timber used, splitting may occur, the nails shall be driven into pre-boarded holes with diameter not greater than 4/5 of the

nail. The head of nails or screws shall be sunk and puttied or dealt with as the Engineer may direct.

The gauge and length of nails and screws used shall be subject to the approval of the Assistant Engineer.

14.2.4 Inspection before fixing

All woodwork shall be passed and initialled by the Assistant Engineer before being treated or finally fixed in position. Rejected timber shall at once be removed from the work by the Contractor.

14.2.5 Fixing

All woodwork shall be fixed in accordance with the drawings or the instructions of the Executive Engineer.

14.2.6 Preservatives

All woodwork shall be fixed in accordance with the drawings or the instructions of the Executive Engineer.

14.2.7 Bearing

All beams and girders shall be bedded on wall plates with not less than 22.5 cm bearing. All joints shall bear not less than 12 cm on wall plates, and every purlin or batten supported on a wall, will have a bearing in the direction of its length equal to its own depth, subject to a minimum of 10 cms.

14.2.8 Posts fixed in exposed position

Wood posts, in exposed position, must rest on a raised stone or cement concrete base, and be fixed by a holding down bolt. Tenons projecting into the stone or concrete base are prohibited. The holding down bolt shall be at least 16 mm in diameter and fixed to a washer embedded in the plinth at least 30 cms below the stone base. The bolt must pass through the base and project 25 cms through the bottom of the post, being secured to it by a nut let in through a side cavity, which must be subsequently plugged.

14.2.9 Trusses

In construction of roof trusses, a full-size truss shall first be lined on a level platform. From this full size diagram, templates of tenons, mortise and scarfs etc. shall be made for use in the manufacture of trusses. Camber shall be provided, where required, in accordance with the specified details.

14.2.10 Scaffolding

The Contractor shall provide all labour, scaffolding, ladders and tackle necessary for hoisting and fixing woodwork in position, and for its inspection during construction. He is also responsible that the tackle and staging are of the requisite strength and the work is secured in a proper manner during construction.

14.3 Wood Work (Individual Items)

Specifications given for individual items are in addition to the general specifications described above.

14.3.1 Frames and Trusses

14.3.1.1 Door, windows and other frames

14.3.1.1.1 General

The work shall be carried out as per detailed drawings and/or as directed by the Engineer. The wooden members of the frame shall be planed smooth and accurate to the full dimensions. Rebates, roundings, mouldings etc., as shown in the drawing shall be done before the members are jointed into frames. Where wood work is not exposed to view as in the case of frames for false ceiling, however, no planing is required to be done unless specified expressly as wrought timber work.

Note: The wrought shall mean 'planed.'

14.3.1.1.2 Jointing

Jointing in timber frames must be made carefully and accurately. They shall be strong, neat and shall fit without wedging or filling. The joints shall be pinned with hard wood or bamboo pins of 10 to 15 mm dia after the members of the frame are pressed together in a suitable vice-mechanism.

The door and window frame shall have rebate to house the shutters, and the depth of such rebate shall be 1.25 cm.

14.3.1.1.3 Surface treatment

Wood work shall be painted, oiled, polished or otherwise treated as specified. All portions of timber against masonry or concrete portion of building shall be coated with boiling coal tar or other type of approved wood preservative or primer, before placing them in final position.

Before any surface treatment is applied the wood work shall be got approved by the Engineer.

14.3.1.1.4 Fixing in position

The frames shall be fixed only after acceptance by the Engineer. The method of fixing as indicated in the drawing or as shown in Fig. 31 or otherwise directed by the Engineer shall be followed. In case of door frames without sills, the vertical members shall be buried in floor for the full thickness of the floor.

Where doors are not provided with sills, the door frame shall be temporarily braced at the sill level so as to prevent warping or distortion of frame during construction. Frames shall also be suitably protected from damage during construction.

14.3.1.1.5 Rebates

Chowkhats shall have a rebate cut to receive the leaves, the rebate to be 1.25 mm deep and of width equal to the thickness of the leaf. The other side shall be rounded off if wire gauge is to be fitted. Where the plaster butts against the chowkhat, a 1.25 mm deep rebate with a slight cut back shall be given to serve as a key to the plaster.

To be ready before starting superstructure:

No chowkhat shall be painted or fixed before the Assistant Engineer has inspected and initialled it in token of his acceptance. All chowkhats shall be ready before the work reaches sill level, so that they can be built in as the brick work or masonry proceeds. Where specially ordered, chowkhat may be fixed lately the completion of brick work and roofing but before plastering. In that eventuality, the brick work of portion where hold-fasts have to be embedded shall be done in mud or laid dry. No extra payment is due when chowkhats are fixed in this manner.

14.3.1.1.6 Chowkhats erection

When sill level is reached and damp proof course laid, chowkhats shall be erected, being placed truly level and plum. They shall be securely strutted or lashed in position till built-in.

14.3.1.1.7 Hold-fasts

Chowkhats shall be secured to the brick work or masonry by hold-fasts which shall be build into the wall with 1:4 cement sand mortar. Each hold-fast shall be fixed to the chowkhats with three 5 cms iron screws. Where the chowkhat is fixed at the extreme edges of the jambs, the hold-fasts shall be forked or bent as directed by the Engineer. The number of hold-fasts to each chowkhat shall be as indicated in the figure/drawing.

14.3.1.1.8 Position of chowkhats in jambs

Unless otherwise specified, doors and windows opening to another room, or to a corridor, or verandah, shall have the chowkhats so fixed that they project 10 mm from the plastered face of the wall. They shall not be kept flush with the wall.

The plaster will stop against the chowkhat which will have the rebate mentioned in item 14.3.1.1.5 above as a key for the plaster.

Other doors and windows will be set back from the face of the wall to the extent specified in the drawings. If this set-back is not specified, it shall be 6 cms.

In the case of doors and windows in dhajji walls, the depth of the chowkhat shall be equal to the thickness of the wall and the faces kept flush with the plaster.

Where architraves have been provided, chowkhats shall be fixed as shown in the drawings giving the detail of the architrave.

14.3.1.1.9 Protection

To protect against water and mortar, splashing wood strips shall be lightly nailed on the arrises of the chowkhat temporarily till painting.

14.3.1.1.10 Seasoning

All door and window leaves shall be cut out and framed together, as soon as possible after the commencement of the work, and stacked closely. They shall be glued just prior to being hung. Before final glueing up, all portions in which defects appear shall be replaced.

14.3.1.1.11 Leaves method of framing

All styles and rails shall be properly and accurately through mortised and tenoned, no filling or wedging being permitted.

14.3.1.1.12 Glueing

All tenons at the final assembly of the door shall be glued and immediately after glueing, the frames shall be tightly clamped and so left till the glue has set.

14.3.1.1.13 Fittings

All fittings are subject to the approval of the Executive Engineer and where so directed by him, the Contractor must deposit in his office one sample of each fitting to be used in the work. Brass and other special fittings shall ordinarily be arranged departmentally and issued to the Contractor for fixing, or as specified. The fittings shall be provided as per Schedules given below.

14.3.1.1.14 Screws

Screws shall be used of such diameter as to fill completely the holes and cups in the fitting which they secure, and are to be oiled before being inserted. Unless the head can be counter-sunk flush with the fitting, round-headed screws shall be used. Brass fitting shall be secured with brass screws.

14.3.1.1.15 Chocks and stops

These shall be provided as shown in the drawings or as directed by Engineer.

14.3.2 Panelled & Glazed Shutters

14.3.2.1 Panelled glazed or panelled and glazed shutters for doors windows etc.

14.3.2.1.1 The specifications for frames of doors, windows, ventilators and clerestory windows are described here. The frames shall be wrought, framed and fixed in position as per detailed drawing and as directed by the Engineer. Specified timber shall be used, and it shall be sawn in the direction of the grains. Sawing shall be truly straight and square. The timber shall be planed smooth and accurate to the full dimensions rebates, rounding and mouldings, as shown in the drawings made, before assembly. Patching or plugging of any kind shall not be permitted except as provided.

14.3.2.1.2 Panelling

The panels shall be framed into grooves to the full depth of the groove leaving an air space of 1.5 mm and the faces shall be closely fitted to the sides of the groove. Mouldings to the edges of panel openings shall be scribed at the joints.

14.3.2.1.3 Joinery work

14.3.2.1.3.1 The thickness of styles and rails shall be as specified in the items of work. The minimum thickness of panel shall normally be 16 mm where the clear width of the panel is more than 300 mm and 20 mm where the clear width of the panel is more than 300 mm. However where the Engineer so consider, lesser thickness up to 12 mm and 15 mm respectively may be allowed by him instead of 16 mm and 20 mm specified above.

14.3.2.1.3.2 Joinery work shall be started immediately after the commencement of the building work. All pieces shall be accurately cut and planed smooth to the full dimensions without any patching or plugging of any kind. Rebates, roundings and moulding as shown in drawings shall be made before assembling. The thickness of styles and rails shall be as specified for the shutters.

14.3.2.1.3.3 All members of the door shutters shall be straight without any warp or bow and shall have smooth, well-planed faces at right angles to each other. The corners and edges of panels shall be finished as shown in drawings, and these shall be further tongued into styles and rails. Such bars shall have mitred joints with the styles. Styles and rails shall be properly and accurately mortised and tenoned. Rails which are more than 180 mm in width shall have two tenons. Styles and end rails of shutters shall be made out of one piece only. The tenons shall pass through styles for at least ¾ of the width of the styles. When assembling a leaf, styles shall be left projecting as horn. The styles and rails shall have 12 mm groove in panelled portion for the panel to fit in.

14.3.2.1.3.4 The depth of rebate in frames for housing the shutters shall in all cases be 1.25 cm and the rebated in shutters for closing in double shutter doors or window shall not be less than 2 cm. In the case of double leaf shutters, the meeting of the styles shall be rebated 20 mm. The rebate shall be splayed.

14.3.2.1.3.5 The joinery work shall be assembled and passed by the Engineer, and the joints shall be pressed, and secured by bamboo pins of about 6 mm diameter. The horns of styles shall be sawn off.

14.3.2.1.3.6 Tolerance

The finished work with a tolerance ± 7 mm in thickness and ± 2 mm in width of styles and rails shall be accepted.

14.3.2.1.3.7 Glueing of Joints

The contact surfaces of tenon and mortise joints shall be treated before putting together with bulk type synthetic resin adhesive of a make approved by the Engineer. Shutters shall not be painted, oiled or otherwise treated, before these are fixed in position and passed by the Engineer. Mounting and glazing margin shall be stub-tenoned to the maximum depth which the size of the member would permit or to a death of 25 mm, whichever is less. Thickness of each tenon shall be approximately one-third the finished thickness of the each tenon shall not exceed five times its thickness.

14.3.2.1.3.8 Beading

Timber, plywood, hard board and particle board panels shall be fixed only with grooves but additional beading may be provided either on one side or on both sides. In so for as glass and asbestos panels are concerned, beading shall always be provided without grooves; where beading is revised without grooves, the beading shall be only on one side, being supported by rebate from the styles. For internal doors and windows beading shall be fixed on the outside.

14.3.2.1.4 Fittings

Details of fittings to be provided shall be as per the schedule fittings supplied by the Engineer in each case. The cost of providing and fixing shutters shall include the cost of bindings and necessary screws for fixing the same. All other fittings shall be enumerated and paid for separately. The fitting shall conform to the specifications laid down in section 14.1.2 above. Where fittings are stipulated to be supplied by the department free of cost, screws for fixing the fittings shall be provided by the Contractor and nothing extra will be paid for the same.

14.3.2.1.5 Wooden cleats and blocks

Wooden cleats and blocks shall be fixed to doors and windows, as directed by the Engineer. The size and shape of cleats and blocks shall be approved by the Engineer.

14.3.2.2 The work shall be done as per specification 14.3.2.1 above, and fittings as mentioned in the Schedules above shall be provided.

14.3.3 Wire Gauge Shutters

14.3.3.1 Specified timber shall be used, and it shall be sawn in the direction of the grains. Sawing shall be truly straight and square. The timber shall be planed smooth and accurate to the full dimensions, rebates, rounding, and mouldings as shown in the drawings made, before assembly, patching or plugging of any kind shall not be permitted except as provided.

14.3.3.2 Styles and rails

The specifications shall be as under 14.3.2.1.3 above. The styles and rails shall be given a rebate to receive the wire gauge which shall form the panels.

14.3.3.3 Wire gauge

This shall unless otherwise specified be of galvanised M.S. wire and IS gauge designation 85 G or 140 G with wire of diameter 0.55 or 0.71 mm respectively. The wire gauge shall be bent at right angles in the rebates of styles and rails, turned back and fixed tight with blue-tacks at about 75 mm centres, fixed alternately in the two faces of the rebates. Over this, wooden beading shall be fixed with braces or small screws at about 75 mm centres. The space between the beading and rebates, where the wire gauge is bent, shall be neatly finished with putty, so that the end of the wire gauge may not be visible.

14.3.3.4 Chowkhat

Wire gauge shutters shall normally be hung on the same chowkhat as other doors and windows, the thickness of the chowkhat being increased suitably to take the rebate of the wire gauge shutter. On existing chowkhats, wire gauge shutters may be fixed with additional moulding having thickness equal to that of shutter and width equal to that of chowkhat.

14.3.3.5 Shutters

The thickness of the shutter shall be as specified. Styles and rails shall conform to specification 14.3.2.1.3 above except that these shall be rebated to a depth equal to half the thickness of styles and rails to receive the wire gauge, which shall form the panels.

14.3.3.6 Fixing

Wire gauge shall be fixed to the frame of the leaf after being stretched from out-to-out of rebate and nailed down tight and then fixed by a 13 mm thick fillet screwed into the rebate. The depth of the fillet shall be such that it projects by 3 mm from the face of the style or rail when fixed. Screws shall not be less than 45 mm to the length nor spaced further than 25 cms. All exposed arrises of the fillet shall be finished with a small neat mould.

14.3.3.7 The specifications for fittings, wooden cleats and blocks shall be as specified in Clause 14.3.2.1.4 & 14.3.2.1.5 above.

14.3.4 Miscellaneous Wood Work

14.3.4.1 Panelled Glazed or Panelled and Glazed Partitions

14.3.4.1.1 The specifications for frames of doors, windows, ventilators and clerestory windows are described here.

The frames shall be wrought, framed and fixed in position as per detailed drawings and as directed by the Engineer. Specified timber shall be used and it shall be sawn in the direction of the grains. Sawing shall be truly straight and square. The timber shall be planed smooth and accurate to the full dimensions, rebates, rounding, and mouldings as shown in the drawings made, before assembly. Patching or plugging of any kind shall not be permitted except as provided.

14.3.4.1.2 Frame work

Wooden frames shall be manufactured as per detailed drawings or as directed by the Engineer and paid for separately unless otherwise specified. The details specified in Clause 14.3.1.1 above shall apply as far as applicable.

14.3.4.1.3 Panelling

The space between the frame work shall be filled in with wooden panelled or glazed partition, suitable environment friendly material other than asbestos sheet, hard board, particle board or as specified. The specifications described in Clause 14.3.2.1.2 above shall apply, except that these shall be fixed in the rebate of the frame with wood screws. Suitable sheet, hard board etc. shall be similarly fixed in the rebate of the frame with wood screws and wooden beading. The thickness of panelling shall be 20 mm.

14.3.4.2 Fixing M.S. Bars and M.S. Grills to Wooden Frames

For fixing M.S. bars in wooden frames of windows etc. through holes shall be drilled in one member of the frame and in the opposite member corresponding holes 5 cm deep shall be made. The bars shall be passed into the frame from one side. The bars shall be cut to correct length, such that they fit into the holes of the opposite members of the frame correctly and remain flush on the outside of the frame member (having through holes). M.S. Bars may be provided with or without M.S. flats as per the direction of Engineer.

M.S. Grills shall be fixed by means of round headed bolts and nuts, in the window frame, before fixing the frame in the masonry. However, if the grills are to be fixed in the wooden frame already fixed in masonry, the same shall be fixed by mean of suitable wood screws.

14.3.4.3 Expanded Metal, Hard Drawn Steel Wire Fabric and Wire Gauge in Wooden Frames

14.3.4.3.1 Expanded metal, hard drawn steel wire fabric or wire gauge or weld mesh as described in the item of work shall be fixed to the window frames in the outside or inside as per detailed drawings or as directed by the Engineer. These shall be free from rust and other defects.

14.3.4.3.2 Fixing

Expanded metal, hard drawn steel wire fabric and wire gauge shall be cut on piece to the size of the frame (cut-to-cut). Expanded metal and hard drawn steel wire fabric shall be fixed on to the frame with staples, oven which wooden beading 60 x 20 mm shall be fixed with wood screws.

The wire gauge shall be turned back at 180° to the full width of frame and fixed tight with blue tacks, over which wooden beading 62 x 19 mm shall be fixed with wood screws.

14.3.4.4 Hold-fasts (refer Fig. 32)

Hold-fasts used for fixing doors and windows frame shall be made of 40 x 3mm flat iron and 40 cm long. It shall have a hole on one end for fixing to frame with 10 mm dia bolt, at the other end. The flat iron shall be split and bent at right angles in the opposite direction.

The hold-fast shall be tightly fixed to the frame by means of bolts, the bolt hole in frame being plugged suitably and finished neat. The hold fast shall be embedded into masonry by concrete block as described in the item of work.

14.3.5 Conversion of Timber

While converting timber into scantlings or planks, care should be taken that there is no waviness on the sawn surfaces. The surface should be as plain as possible. The following tolerances are permissible in cut timber.

Sawn Timber

Tolerances:

Permissible tolerance in measurements of cut timber shall be as follows:

a)	For measurement upto and including 100mm in width or thickness	- 0 mm + 3 mm
b)	For measurement above 100mm in width or thickness	- 3 mm + 6 mm

The scantlings on planks should be cut to the exact sizes and care should be taken that there is minimum of wastage of timber.

14.3.6 Fittings

Fittings shall be provided as specifications given in section 14.1.2 above. For specifications of any additional types of fittings the provisions in Chapter 2 of HPPWD Specifications (Vol. I), 1990 shall be followed.

14.4 Measurements

14.4.1 General

Wood work and joinery work shall be measured in cubic metres, cubic decimetres, square metres, running metres, numbers or any other manner as specified in the respective item of work.

Length and width shall be measured to the nearest 0.01 m. Width of single detouched plank shall however be measured to the nearest 2 mm. Thickness shall be measured to the nearest 2 mm.

Scantlings, battens and baulks shall however be measured to the nearest 2 mm in each cross-sectional dimension.

(Note: Scantling means a piece of sawn timber whose cross-sectional dimensions exceeds 5 cm but do not exceed 20 cm in both directions. Battens means a piece of sawn timber whose cross-sectional dimensions do not exceed 5 cm in either direction. Baulk means a piece of sawn timber whose cross-sectional dimensions exceeds 5 cm in one direction and 20 cm in other direction. Plank means a sawn timber whose cross-sectional dimension does not exceed 5 cm in one direction and exceeds 5 cm in one direction and 20 cm in other direction).

Areas shall be worked out to the nearest 0.01 m^2.

Cubical contents shall be worked out to the nearest 0.001 m^3.

All work shall be measured net as fixed, that is no extra allowance in measurement shall be made for shape, joints etc., except as indicated. However where the dimension as fixed exceeds the specified dimension (as per drawing etc.), only the specified dimension shall be measured and where one or more dimension(s) of piece as fixed is less than the specified dimension the actual dimension shall be measured, without prejudice to the right of the Engineer to reject the piece and order replacement of such pieces.

i) Scantling battens etc., in sections other than rectangular shall be measured as the least rectangle from which the section can be obtained.

ii) In case of battens, scantling etc., varying sections largest section shall be measured.

iii) Mitred pieces shall be measured along the longest dimension.

iv) Circular or segmental portions shall be measured net under the specific item describing such work.

v) In measuring framed timber work, length of tenons, scarfs and such extra length required for making joints shall be added to site lengths. Extra lengths where required for embedding in walls, floors etc., shall be added to site lengths.

Tolerance:

Unless specifically mentioned otherwise a tolerance of 1.5 mm shall be allowed for each wrought face.

14.4.2 Measurement for Individual Item

14.4.2.1 Doors, windows, false ceiling partition frames, and trusses

Wood work wrought and framed shall be measured for finished dimensions. No allowance shall be made for wastage and for dimension supplied beyond those specified. Measurements shall be made as specified in 14.4.1 above.

In case of moulding rounding, rebates, circular and varying sections, the sectional area of the piece shall be taken as the area of the least square or rectangle from which such section can be cut.

14.4.2.2 Panelled and glazed shutters

Measurements shall be made as specified in closed position covering the rebate of the frame but excluding the gap between shutter and frame. Overlay of two shutters shall not be measured. No extra payment shall be made for shape, joints etc., except for circular or segmental portions which shall be measured separately. Measurements shall be made as specified in 14.4.1 above.

14.4.2.3 Wire gauge shutters

Measurements shall be made as specified in 14.4.2.2 above.

14.4.2.4 Miscellaneous items

14.4.2.4.1 Panelled and glazed partitions

Measurements shall be made as specified in 14.4.1 above. The area within the rebates of the frame shall be calculated.

14.4.2.4.2 M.S. Bars, Grills

The length of M. S. bars and flats shall be measured separately correct to a cm. Their weight is calculated in kg from standard tables.

14.4.2.4.3 Expanded metal, hard drawn steel wire fabric and wire gauge

The length and breadth shall be measured correct to a cm, the area from outside to outside of beading shall be calculated in square metre nearest to two places of decimal.

14.4.2.4.4 Hold-fasts

Hold fasts shall be counted in numbers and paid accordingly.

14.4.2.5 Conversion of timber

As specified in 14.4.1 above.

14.4.2.6 Fittings

Fittings shall be counted in numbers as specified in latest applicable HPPWD Schedule of Rates and paid accordingly.

14.5 <u>Rate</u>

14.5.1 General

The rate includes all the material and labour required for completing the work as per specification mentioned above and as specified for each item in the latest applicable HPPWD Schedule of Rates. The through rates include all the wastages of timber in sawing and cutting it also includes carriage up to 1 km by mechanical transport and head load upto 100 metres. The contractor's profit @ 10% and overhead charges @ 5% are including the rates. The labour rate includes the cost of tools and scaffolding whenever required.

Note: The rates for individual item are in addition to the general rate described above.

14.5.2 Individual Items

14.5.2.1 Frames for doors, windows, false partitions, ceilings and trusses

The rates shall be as specified in 14.5.1 above. The through rates and labour rates for additional labour for circular works such as in frames of fan, lights etc. includes the additional wastage of timber and extra labour required for such type of work.

14.5.2.2 Panelled and glazed shutters

The rates shall be as specified in 14.5.1 above. In case fixed shutters are provided instead of openable shutters, the rates shall be reduced accordingly as mentioned in the schedule of rates. If superior types of glasses are used instead of ordinary glass panes, extra rates shall be paid as per schedule of rates.

14.5.2.3 Wire gauge shutters

The rates shall be as specified in 14.5.1 above. The rate includes beading and provision of wire gauge including its wastages.

14.5.2.4 Miscellaneous items

The rates shall be as specified in 14.5.1 above. In case hard drawn steel wire fabric weighing not less than 7.75 kg/sqm is to be used instead of 2 to 3 mm thick glasses in panelled and glazed doors and windows shutters, extra rate shall be paid as mentioned in the schedule of rates.

14.5.2.5 Conversion of timber

The rates shall be as specified in 14.5.1 above. The rate includes wastages of timber and sawing charges.

14.5.2.6 Fittings

The rates shall be as specified in 14.5.1 above.

14.6 Glazing

14.6.1 Sheet Glass, Ordinary Quality

The sheet glass for glazing aid framing purposes shall conform to specifications laid down in IS: 1761-1960.

14.6.1.1 The glass shall be transparent and reasonably free from blisters, stones, scratches and bubbles so as to give a clear visibility through the glass. Blisters exceeding 4 mm, shall not be present. Blisters less than 4 mm, if present, shall be less than 30 per square metre and shall be fairly uniformly distributed. Bubbles (blisters) below 2 mm need not be considered.

The sheet glass shall not show any distortion of light from its parallel nature when tested according to the method prescribed in Appendix 'B' in IS: 1761-1960. The cut sizes of sheet glass shall be within the following tolerances, on both length and width of the prescribed cut sizes:

Thickness (mm)	Tolerance on cut size (mm)
2.5 and below	± 1.5
3.0 and above	± 2.0

The thickness of sheet glass when tested according to the method prescribed in Appendix 'C' in IS: 1761-1960, shall be as follows, within the tolerance indicated against each:

Thickness (mm)	Tolerance on thickness (mm)
2.0	± 0.2
2.5	± 0.2
3.0	± 0.2
4.0	± 0.2
5.0	± 0.2
5.5	± 0.2
6.5	± 0.3

14.6.2 Sheet Glass, Selected Quality

It is basically a flat glass made by blowing or drawing. Specifications for this variety of glass are given in IS: 2835-1987. This quality of glass is intended for use in the manufacture of toughened or laminated safety glass, which is referred to as type 'C' in the aforesaid standard.

14.6.2.1 Requirements

The sheet glass shall be transparent and free from blisters. It shall be, as possible, colourless as judged by the un-aided eye (except when viewed edgewise). It may possess a light blue to green tint.

Individual types of sheet glass shall comply with requirements in respect of allowable defects as prescribed in Table 1 of IS: 2835-1987. In all types of sheet glass not more than 30 percent of the total defects enumerated in Table 1 of IS: 2835-1987 shall be present in an area enclosed by an ellipse, the major and minor area of which shall be parallel to the sides and shall be 0.8 of the length and width of the cut size of the glass sheet. The sheet glass, selected quality shall have tolerance on cut sizes same as in the case of sheet glass, ordinary quality.

14.6.2.2 Tolerance in thickness

The range of thickness of sheet glass, selected quality, shall be as follows:

Nominal Thickness (mm)	Range of Thickness (mm)

Nominal Thickness (mm)	Range of Thickness (mm)
5.0	4.7 to 5.3
6.0	5.7 to 6.3

14.6.2.3 Tests

The test regarding bow, warpage, striate and lines, and waviness etc., shall be carried out as specified in IS: 2835-1987.

14.6.3 Plate Glass, Ordinary Glazing Quality

Plate glass is a fiat glass formed by a rolling process, ground and polished on both sides, with surfaces, essentially plane and parallel.

This type of glass is the superior transparent glass having practically no defects.

14.6.4 Ordinary glass panes of not less than 3 mm thick or as specified shall be provided. The glass panes shall be free from flaws, specks or bubbles and shall have square corners and straight edges. The glass pane shall be so cut that it fits slightly loose in the frames.

14.6.5 Glazing shall be provided on the outside of the frame unless otherwise specified. Putty shall be applied between, glass panes and panel frame. Putty shall then be applied over the glass pane, which shall stop 2 to 3 mm from the sight line of the back rebate to enable the painting to be done upto the sight line, to seal the edge of the putty to the glass. The oozed out back putty shall be cleaned and form putty cut to straight, line. Putty shall be painted within 2 to 3 weeks, after glazing is fixed to avoid its cracking.

14.6.6 Where specially stipulated, fixing of glass panes may be done with metal or wooden beading instead of mere putty. Where metal beading is specified extra payment shall be made on this account.

14.7 Other Materials

14.7.1 Putty

Specifications given in IS: 419-1967 shall be referred for putty for use in wood frames. Putty shall be of approved brand and manufacture.

The material shall be a homogeneous paste and shall be free from dust, grit and other visible impurities. This material is used for fixing glass panes on wood and metal frames, and for filling splits, cracks and holes in wood or metal.

14.7.2 Glue

Best quality glue shall be used as per IS: 852-1994.

15. PAINTING WORK

15.1 Materials

All materials used shall conform to the specifications given below:

15.1.1 Painting Brushes

The brushes used for painting work shall conform to the following Indian standards:

I.S. No.	Subject
384-2002	Brushes, Paints and Varnishes, Flat - Specification
486-1983	Specification for Brushes, Sash Tool, for Paints and Varnishes
487-1997	Brushes, Paint & Varnish - (i) Oval, Ferrule Bound; and (ii) Round, Ferrule Bound

The fiat brushes for paints and varnishes shall be of the following sizes: 12 mm, 25 mm, 38 mm, 50 mm, 63 mm, 75mm and 100 mm.

Refer section 15.2.2.9 below for supporting work specifications for brushes.

15.1.2 Oils, Paints and Primers etc.

Oils, paints, primers etc. shall be used of approved brand and manufacture, as directed by the Engineer. The relevant specifications are given below. For details of other painting materials and specifications, provisions in section 2.23 of Chapter 2, HPPWD Specifications (Vol. I), 1990 shall be followed.

15.1.2.1 Oils

15.1.2.1.1 Linseed Oil (Raw)

Linseed oil shall be as per IS: 75-1973. Raw linseed oil shall be lightly viscous but clear and of yellowish colour with light brown tinge. Its gravity at a temperature of 30° C shall be between 0.923 and 0.928. The oil shall be mellow and sweet to the taste with very little

smell. The oil shall be of sufficiently matured quality. Oil, turbid or thick, with acid and bitter taste and rancid colour and which remains sticky for a considerable time shall be rejected. The oil shall conform in all respects to IS: 75-1973. The oil shall be of approved brand and manufacture.

15.1.2.1.2 Linseed Oil (Double boiled)

Linseed oil (double boiled) shall be as per IS: 77-1976. This covers two types namely type I boiled and type II Pale boiled. The material is used in paint industry and in other allied applications, and also as a foundry core oil.

15.1.2.1.3 Turpentine Oil

Turpentine oil shall conform to IS: 533-2007. It is generally used as a solvent for paints and pigments.

15.1.2.2 Paints

15.1.2.2.1 General

Paint is a mixture of solids and liquids and is used to cover surfaces for decorative and preservative purposes. The solids are the pigments or base, and the liquids the medium or vehicle to enable the solid particles to be applied to the surface. The functions of the solids are to provide body or substance, to give colour and obscuring power to the film of paint, and to protect it from too rapid decomposition. The functions of the liquids are to hold the solid particles In suspension and to allow the materials to be spread evenly over a surface. They also help to bind the particles together and to give cohesion and gloss to the painted surface Coloured pigments provide the requisite tints to the paint, and are often known as strainers. They may be natural earth pigments, such as iron oxides or chemically manufactured colours, such as chrome yellow and Prussian blue. These pigments are sometimes used in combination with a white pigment called the base, which gives the main bulk and weathering properties to the paint.

15.1.2.2.2 Enamel Paint (White)

Enamel paint (conforming to IS: 2933-1975) of approved brand and manufacture and of the required colour shall be used. For the end coat the paint of same quality but of shade to suit the top coat shall be used.

15.1.2.2.3 Synthetic Enamel in all Shades except White

Synthetic Enamel paint (conforming to IS: 2932-2003) of approved brand and manufacture and of the required colour shall be used for the top coat and an undercoat of shade to match the top coat as recommended by the manufacturer shall be used.

15.1.2.2.4 Red Lead Paint

This shall be conforming to IS: 57-1989.

15.1.2.3 Pigment

Pigments shall be of non-organic origin and of approved manufacture and suitable for mixing with cement. Aniline base colour or other organic dyes shall not be used as they are likely to fade. The use or pigments shall be resorted to only when ready-made Portland cement inspired colour is not available. The Contractor shall use coloured Portland cement in lieu of mixing cement with pigments without extra cost. General guide to the selection of mineral pigments to obtain various colour effects is given below:

S.N	Colour desired	Commercial names of colours (use with cement)
1	Grey, black	Black iron oxide, manganese black
2	Brownish red to dull brick red	Red oxide of iron
3	Bright red to vermillion	Mineral turkey red
4	Red sandstone to purplish red	Indian red
5	Brown to reddish brown	Metallic brown (oxide)
6	Buff colonial tin and yellow	Yellow ochre yellow oxide of iron
7	Green	Chromium oxide
8	Blue	Ultramarine blue
9	Cream	Yellow oxide of iron

15.1.2.4 Primers

15.1.2.4.1 Cement Primer

Cement primer coat is used as a base coat on wall finish of cement, lime or lime cement plaster or on asbestos cement surfaces before oil emulsion distemper paints are applied at

them. Cement primer is composed of a medium and pigment which are resistant to the alkalis present in the cement, lime or lime cement in wall finish and provides a barrier for the protection of subsequent coats of oil emulsion distemper paints. It shall be applied by brushing and not by spraying. The primer shall be avoided particularly on absorbent surfaces.

15.1.2.4.2 Metal Primer

Metal primer is used in painting system mainly followed for metal surfaces for the protection of steel works both under marine and inland out-door conditions.

15.1.2.4.3 Primer for Expansion Joints

Primer for expansion joints shall be of best quality and subject to the approval of the Engineer.

15.1.2.4.4 Zinc Oxide Chrome / Red Oxide / Red Lead Primer

It shall conform to relevant I.S. Specifications. It is used on aluminum and steel and galvanised steel work.

15.1.2.4.5 Miscellaneous

15.1.2.4.5.1 Putty for Steel Work

This shall be of approved brand and manufacture and shall conform to relevant I.S. Specifications.

15.1.2.4.5.2 Plaster of Paris

This is a white power material used for finishing works not liable to heavy load. This shall conform to IS: 2333-1992. The material is often used for decoration purposes.

15.1.2.4.5.3 Mordant Solution

This shall be composed of:

Soft water	64 parts
Copper chloride	1 part
Copper nitrate	1 part by weight
Ammonium Chloride	1 part
Hydrochloric acid	1 part

15.1.2.4.5.4 Coal Tar Paint

Coal tar paint of approved brand and manufacture shall be used. It shall conform to IS: 290-1961. The specifications cover two types, namely, Type-A quick drying and Type-B slow drying. The material is generally used as a protective paint for iron, steel and timber.

15.1.2.4.5.5 Kerosene Oil

This shall conform to IS: 1459-1974. Kerosene oil is used as solvent for paints and pigments.

15.1.2.4.5.6 Spirit

This shall conform to IS: 324:1959 specifications for ordinary denatured spirit. It is generally used as a solvent and vehicle in paint industry, and as fuel also.

15.1.2.4.5.7 Shellac

This shall conform to IS: 16-2008.

15.1.2.4.5.8 Creosote Oil

It shall confirm to IS: 218-1983. This is used as general purpose wood preservatives and mainly in the treatment of railway sleepers, telegraph and telephone poles.

15.1.2.4.5.9 Bees Wax

This is used as a polish.

15.1.2.4.5.10 Patent knotting

This is a liquid product used on wood work over knots. This shall be of approved brand and manufacture.

15.2 <u>General Workmanship</u>

15.2.1 General

15.2.1.1 Painting shall not be started until the Engineer has inspected the items of work to be painted, satisfied himself about their proper quality and given his approval to commence the painting work.

15.2.1.2 The materials for the execution of painting work shall be obtained direct from approved manufacturers and brought to the site in maker's drums, kegs, etc. with seals unbroken. All paints shall not be inferior to relevant Indian Standards as mentioned in specifications.

15.2.1.3 All materials not in actual use shall be kept properly protected. Lids of containers shall be kept closed and surface of paint in open or partially open containers is covered with a thin layer of turpentine to prevent formation of skin. Materials which have become stale or fat due to improper and long storage shall not be used. The paint shall be stirred thoroughly in its container before pouring into small containers. While applying also the paint shall be continuously stirred in the smaller container. No left over paint shall be put back into stock tins. When not in use, the containers shall be kept properly closed.

15.2.1.4 If for any reason, thinning is necessary, in case of ready mixed paint, the brand of thinner recommended by manufacturer shall be used.

15.2.1.5 Painting except the priming coat shall generally be taken in hand after all other builder's work is practically finished. The rooms shall be thoroughly swept out and the entire building cleaned up at least one day in advance of the paint work being started.

15.2.1.6 The surface to be painted shall be thoroughly cleaned and dusted. All rust, dirt, scales, smoke and grease shall be thoroughly removed before painting is started. No painting on exterior or other exposed parts of the work shall be carried out in wet, humid or otherwise unfavourable weather and all the surfaces must be thoroughly dry before painting work is started.

15.2.1.7 Brushes used for painting shall comply with the Indian Standard Specifications.

The brushes used shall be of the approved type and of a size suitable for the work in hand. For general wood work, including doors, sashes etc., a (7.5 to 10 cm) brush for larger areas and a (5 cm) for the rails would be considered suitable. Alternatively, ground brush and No. 1 sash tool respectively are sometimes preferred. For flat wall paint, flat brushes from (10 to 15 cm) width are also used.

15.2.1.8 Brushes shall be rubbed out at the close of the work and kept immersed in a mixture of linseed oil and white spirit, when not in use. Before being used again, the oil and spirit must be rubbed out. If not required, for sometime or when required to be used with another colour, the brushes shall be cleaned out with turpentine and then washed with soapy water. A brush in which paint has dried, is ruined and shall on no account be used. Now brushes may contain dressing of extraneous matter and shall be well washed with soapy water before use.

15.2.1.9 Only skilled painters shall be employed for paint work, and the labourers required to help shall not exceed the number of the skilled workmen.

15.2.1.10 Each coat of paint shall differ slightly in tint from the preceding one, so as to make each coat readily distinguishable. The last coat being of the tint required for the finished work. Every coat shall be perfectly dried and shall be got approved from the Assistant Engineer before applying.

15.2.1.11 The main requirement of priming coat is that it should adhere firmly to the unpainted surface and also provide a suitable ground to receive and hold the next coat. It is most important that the priming paint should be of the correct type for the surface to be painted and that it should be supplied in a proper manner. Special care shall be paid to places where decay or corrosion is likely to occur, such as joints in wood or metal and end grain in wood. Hurried priming should be avoided particularly on absorbent surfaces. Any primed work that has been allowed to deteriorate through exposure for a long period; it must be removed with pumice stone or other suitable abrasive. The priming coat shall be applied again.

15.2.1.12 Stepping and filling shall be done after priming. The material required for this purpose shall conform to Indian Standards specifications. Stepping is used to fill holes and cracks, while the function of the filler is to level up slight irregularities of surface. Filler shall be applied with a break knife and shall be subsequently rubbed down to a level surface with abrasive paper, pumice stone or other suitable abrasive.

15.2.1.13 The functions of the paint used for undercoating are to obscure the primed surface, to provide a fresh surface of uniform texture and of a colour approaching that of a finishing coat, and to build up a layer of paint sufficient in type and thickness to protect the material painted according to the conditions of exposure.

The number of undercoats required in each case will depend upon the type of finish desired and on the conditions of exposure. For most works, a minimum of one undercoat is

needed while for works requiring a high class gloss finish of required to underage a severe exposure, a large number of undercoats may be needed.

15.2.1.14 The finishing coat in a paint system is intended to provide the particular colour and degree of texture required. In external work, the finishing coat also serves to protect the main body of the paint beneath and it should therefore, be renewed when necessary before undercoat becomes seriously damaged by the weather.

15.2.1.15 Care shall be taken while painting to avoid damage to furniture, floors etc., and to maintain general tidiness. The Contractor shall remove with turpentine or any other approved method all stains, smears, splashing and dropping of every kind from floors glazing, furniture and from similar situations.

15.2.1.16 Since some of the paints are poisonous, painters should never fail to wash their hands after painting. Precautions may also be taken that workmen do not smear themselves with paints unavoidably. Where it is necessary to rub down with sand paper, only water proof paper shall be used and the work kept wet. Too much pressure not be used in rubbing. Slush formed in rubbing must be frequently washed off with plenty of water.

15.2.2 Application of paints

15.2.2.1 Brushing of paints

The brushing operations are to be adjusted to the spreading capacity advised by the manufacturer of the particular paint. The painting shall be applied evenly and smoothly by means of crossing and laying off, the later in the direction of the grain of wood. The crossing and laying off consists of covering the area over with paint, brushing the surface hard for the first time over and then brushing alternately in opposite directions two or three times and then finally brushing lightly in a direction at right angles to the same. In this process, no brush marks shall be left after the laying off is finished. The full process of crossing and laying off will constitute one coat.

During painting, every time after the paint has been worked out of the brush bristles or after the brush has been unleaded, the bristles of the brush which are down together due to the high surface tension of the small quantities of paint left in between the bristles, shall be opened up by striking the brush against a portion of the painted surface with the end of the bristles held at right angles to the surface. So that bristles thereafter will collect the correct amount of paint when dipped again into the pain container.

15.2.2.2 By spraying

Where so stipulated, the painting shall be done with spray. Spray machine used may be (a) high pressure (small air aperture) type, or (b) a low pressure (large air gap) type, depending on the nature and location of work to be carried out. Skilled and experienced workmen shall be employed for this class of work. Paints used shall be brought to the requisite consistency by adding a suitable thinner.

Spraying should be done only when dry condition prevails. During spraying the spray gun shall be held perpendicular to the surface to be coated and shall be passed over the surface in a uniform sweeping motion. Different air pressures and fan adjustment shall be tried so as to obtain the best application with the minimum wastage of paint. The air pressure shall not be kept too high as otherwise the paint will clog up and will be wasted.

Spots that are inaccessible to the spray pattern shall be touched up by brush after spraying.

At the end of the job, the spray guns shall be cleaned thoroughly so as to be free from dirt. Incorrect adjustments shall be set right, as otherwise they will result in variable spray patterns, runs, sags and uneven coats.

15.2.2.3 Each coat shall be allowed to dry completely and lightly rubbed with very fine grade of sand paper and loose particles brushed off before next is applied. Each coat shall very slightly in shape and shall be got approved from the Engineer before next coat is started.

15.2.2.4 Each coat except the last coat, shall be lightly rubbed down with sand paper or fine pumice stone and cleaned off dust before the next coat is applied.

15.2.2.5 No hair marks from the brush or clogging of paint puddles in the corner of panels of mouldings etc. shall be left on the work.

15.2.2.6 In painting doors and windows, the putty round the glass panes shall be taken to see that no paint stains etc., are left on the glass. Tops of shutters and surfaces in similar hidden locations shall not be left out in painting.

15.2.2.7 In painting steel work, special care shall be taken while painting over bolts, nuts, rivets, overlaps etc.

15.2.2.8 The additional specifications for primer and other coats of paints shall be as according to the detailed specifications under the respective headings.

15.2.2.9 Brushes and containers

After work, the brushes shall be completely cleaned off of paint and linseed oil by rinsing with turpentine. After cleaning, the brushes are wrapped in heavy paper or water proof paper for storage. If it is to be used the next day, it shall be hung in a thinner or linseed oil in a container. On no account, shall brushes be made to stand on the bristles. A brush in which paint has dried up is ruined and shall on no account be used for painting work. The containers when not in use, shall be kept closed and free from air so that paint does not thicken and also shall be kept guarded from dust. When the paint has been used, the containers shall be washed with turpentine and wiped dry with soft clean cloth, before they can be used again.

In addition, the containers of paints have expiry date marked by the manufacturers, which should be highlighted so as to facilitate use of paint within due period.

15.3 Steel and Other Metal Surfaces

15.3.1 General

Reference shall be made to the following Indian Standards:

IS No.	Subject
2524 (Part 1)-1968	Code of practice for painting of nonferrous metals in buildings: Part 1 – Pretreatment
2524 (Part 2)-1968	Code of practice for painting of nonferrous metals in buildings: Part 1 – Painting
1477 (Part 1)-1971	Code of Practice for Painting of Ferrous Metals in Buildings: Part 1 – Pretreatment
1477 (Part 2)-1971	Code of practice for painting of Ferrous Metals in Buildings: Part 2 – Painting

15.3.2 Preparation of Surfaces

New Surface: The surfaces before painting shall be cleaned of all rust, scale, dirt and other foreign matter sticking to it with wire brushes steel wool, scrapers, sand paper etc. This surface shall then be wiped finally with mineral turpentine which shall also remove grease and perspiration of hand marks. The surface shall then be allowed to dry.

15.3.3 Application of Mordant Solution over G.I. Surfaces

The surface shall be prepared in the manner described above and then shall be treated with Mordant Solution (5 liters for about 100 sqm) by rubbing the solution on surface generously, with a brush or bundle of rags on a stick. After about half an hour, the surface will turn grey and parts remaining bright shall be retouched and the extra surface washed down thoroughly with clean cold water and allowed to dry.

15.3.4 Application of Primers and Paints

After preparation of the surface, the priming coat shall be applied immediately. The specification of paints shall conform to para 15.1.2 and 15.2.2 above.

The primers and paints used shall be of the following type.

1. Ready mixed, priming paint/red lead/red oxide/zinc oxide chrome.
2. Enamel paint.
3. Ready-mixed paint.
4. Aluminium paint.
5. Bituminous paint (Black Anti-Corrosive).
6. Ready mixed bituminous paint anti-corrosive.
7. Ready mixed acid resisting paint.
8. Coal tar black paint.
9. Black Japan paint.
10. Superior Ready-mixed for G.I. sheets.

15.4 Wood and Wood Based Materials

15.4.1 General

Reference shall be made to the following Indian Standards:

IS No.	Subject
2338 (Part 1)-1967	Code of practice for finishing of wood and wood based materials: Part 1 - Operations and workmanship
2338 (Part 2)-1967	Code of practice for finishing of wood and wood based materials: Part 2 – Schedules
426-1961	Paste filler for colour coats.
110-1983	Ready mixed paint, brushing, grey filler, for enamels for use over primers.

15.4.2 Preparation of Surface

(i) New Surfaces of wood work: All wood work shall be dry and free from any foreign matter, incidental to building operations. Nails shall be punched well below the surface to provide a firm key for stopping. Mouldings shall be carefully smoothed with abrasive paper and projecting fibres shall be removed. Flat portions shall be smoothened off with abrasive paper used across the grain prior of painting and with the grain prior to staining or if the wood is to be left in its nature colour. Wood work which is to be stained may be smoothened by scraping instead by of glass papering, if so required.

Any knots, resinous, streaks or blueish sap wood that are large not enough to justify cutting out shall be treated with two coats of pure shellac knotting, applied thinly and extended about 24 mm beyond and the actual area requiring treatment.

(ii) New wood based materials:

I. Plywood & block board: This shall be treated as for solid wood as per para (i) above.

II. Hard Boards: The surface shall be dusted off and lined with a coat of plastic emulsion paint thinned with water or with a coat of shellac varnish as specified. The surface shall then be rubbed down with fine grade abrasive paper and followed with required under coating and finishing coat as for solid wood.

III. Particle Board: The surface shall be filled with a thin brush-able filler and finished as for solid wood.

IV. Insulation Boards: Two thin coats of water based paints shall be applied by spraying.

15.4.3 Priming Coat

The dirt or any other extraneous materials shall be removed from the surface to be painted. In case the surface is already finished with primer coat but unsatisfactory it shall be rubbed down to bare wood and surface re-primed. Primer shall be applied by brushing.

The priming coat used shall be of the following type or as specified:

(1) Ready mixed paint white lead for priming.

(2) Read mixed paint wood primerpink.

(3) Ready mixed paint Aluminium primer water resistant.

(4) Ready mixed paint priming for enamel.

15.4.4 Application of Transparent Wood Filler

The filler shall be applied with brush or rag in such a way that it fills up all the pores and indentations and leaves up the surface. It shall be allowed to dry for 24 hours and it shall then be cut and rubbed with emery paper so that the surface of the wood is laid bare, with the filler only in the pores and crevices of the wood.

15.4.5 Stopping

All holes, cracks, crevices, etc. shall be stopped carefully to a true and level surface with putty before the main under coat is applied and after the application of the priming coat. Stopping shall be prepared as below:

Bees wax, resin and lac (orange in colour) in the proportion of 1:1:16 by weight shall be melted down together in a suitable pot using slow heat, the mix being kept well stirred, Colouring materials to produce the required shade shall be added in to molten mixture and stirred. Stopping shall on cooling be rolled into stick forms for use.

15.4.6 Application of Paints

This shall conform to specifications under para 15.2.2 above.

The paints shall be of the following type:

1. Enamel paint.
2. Ready mixed paint.
3. Flat oil paint.
4. Coal Tar Black paint.
5. Black Japan paint.

Note: Other treatments used for wood and wood based surfaces are described below.

15.4.7 Applying Wood Preservatives

The preservative of specified quality shall be applied in two coats. On new work, it shall be applied liberally with a stout, brush and not daubed with rags or cotton waste. The first coat shall be allowed at least 24 hours to soak in before the second coat is applied. The excess of preservative which does not soak into the wood shall be wiped off with a clean dry piece of cloth.

15.4.8 Varnishing

15.4.8.1 Surface to be varnished shall be prepared to produce a smooth, dry matt surfaced. Previous coats of paint or stain if any, shall be allowed to dry and be rubbed down lightly, wiped off and allowed to dry.

The operation of varnishing calls for careful attention to cleanliness. All dust and dirt shall be removed from the surface to be varnished and also from the neighbourhood. If the surfaces are dampened to avoid rising of the dust, they shall be allowed to dry thoroughly before varnishing is commenced. Damp atmosphere and draughts shall be avoided. For exterior work, a normal dry day should be chosen. Exposure to extremes of heat or cold or to a damp atmosphere will spoil the work.

In handling and applying varnish, care should be taken to avoid forming forth or air bubbles. Brushes containers shall be kept scrupulously clean.

15.4.8.2 The varnish shall be applied liberally with a brush and spread evenly over a portion of the surface with short light strokes to avoid frothing. It shall be allowed to flow out while the next section being laid in. Excess varnish shall then be scrapped out of the brush and the first section be crossed, re-crossed, and then laid off lightly. Too much or too little varnish left on the surface will mar the appearance of the finish. The varnish once it has begun to set, shall not be retouched. If a mistake is made, the varnish shall be removed and the work started afresh.

In case of two coats of varnish work, the first shall be a hard drying undercoating or flatting varnish, this shall be allowed to dry hard and then be flatted down before applying the finishing coat. If two coats are applied, sufficient time shall be allowed between two coats.

When flat varnish is used for finishing, a preparatory coat of hard drying under coating of flatting varnish shall first be applied and shall be allowed to harden thoroughly. It shall then be lightly rubbed down before the flat varnish is applied. Sections of the work such as panels, shall be cut in clearly, so as to avoid any overlapping during applications, as this is likely to impart some measure of gloss to partially dried areas, worked up in lapping. On larger areas, the flat varnish shall be applied rapidly, and the edges of each patch applied shall not be allowed to set but shall be followed up whilst in free working condition.

15.4.9 Spirit or Oil Stains

15.4.9.1 Preparation of wood for staining

The surface intended for staining shall be kept scrupulously clean and free from greasy finger marks. It shall be prepared by careful smoothing with fine abrasive paper used in the direction of grain; scratches across the grains are likely to become stained darker than the rest of the surface and so spoil the finished appearance.

Small cracks on nail hole shall be stopped in case of spirit stains. The stopping shall be rubbed down with fine abrasive paper when hard and touched with a little thinned knotting before staining. Where oil stains is to be used, stopping shall be done after staining.

15.4.9.2 Application of stains

Stains shall be applied by brushing and wiping. The stains shall be so thinned that it can be applied fairly liberally without over-staining. Care shall be taken, especially on absorbent soft woods, to apply the stain evenly and without overlapping spirit stains, in particular require careful and quick applications as they dry very quickly.

15.4.10 French Polish

15.4.10.1 Preparation of surface

All unevenness shall be rubbed down to smoothness with sand paper and the surface shall be well dusted. The pores in the wood shall be filled up with a filler made of a paste of whiting in water or methylated spirit (with a suitable pigment like burnt sienna or umber, if required) otherwise the French polish will get absorbed and a good gloss will be difficult to obtain.

15.4.10.2 Application of polish

A pad of woolen cloth covered by a fine cloth shall be used to apply the polish. The pad shall be moistened with polish and rubbed hard on the surface in a series of overlapping circles applying the polish sparingly but uniformly over the entire area to give an even surface. A trace of linseed oil on the face of the pad may be added which shall facilitate this operation. The surface shall be allowed to dry and the remaining coats applied in the same way. To finish off, the pad shall be covered with a fresh piece of clean fine cloth, slightly damped with methylated spirit and rubbed lightly and quickly with circular motions. The finished surface shall present a uniform texture and high gloss.

15.4.11 Linseed Oil

The oil shall be applied freely with brushes evenly and smooth until no more oil is absorbed. Each subsequent coat shall be applied after previous coat is thoroughly dried and in any case not before 24 hours of application of preceding coat. The surface after completion shall not be patchy and sticky to the touch and shall present uniform appearance.

15.4.12 Bees waxing

15.4.12.1 Preparation of bees wax

In case of bees wax, it shall be prepared locally with the following specifications:

Pure bees wax free from paraffin or stearine adulterants shall be used. Its specific gravity shall be 0.956 to 0.969 and melting point 63° C. The polish shall be prepared from mixture of bees wax linseed oil, turpentine, and varnish in the ratio 2:1.5:1:0.5 by weight. The bees wax and boiled linseed oil shall be heated over a slow fire. When the wax is completely dissolved, the mixer shall be cooled till it is just warm and turpentine and varnish added to it in the required proportions and entire mixture shall be well stirred.

15.4.12.2 Preparation of surface

This shall conform to para 15.4.8.1 above under varnishing.

15.4.12.3 Application of bees wax or wax polish

The polish shall be applied evenly with a clean soft pad of cotton cloth in such a way that the surface is completely and fully covered. The surface is then rubbed continuously for half an hour. After well rubbing in one coat of wax polish, the work shall be covered with dust proof sheet (cloth for preventing dust falling on the work). Subsequent coat shall be applied after the surface is quite dry and shall be rubbed off with soft flannel, until the surface has assumed an uniform gloss and is dry, showing no sign of stickiness.

The final polish depends largely on the amount of rubbing which shall be continuous and with uniform pressure with frequent changes in the direction.

15.4.13 Coal Tarring

15.4.13.1 Coal tar of approved manufacture shall be used. The tar to every litre of which 200 gm of unslaked lime has been added, shall be heated till it begins to boil. It must then be taken off the fire and kerosene oil added to it slowly at the rate of one part of kerosene oil to six or more parts by volume and stirred thoroughly. The addition of lime is for preventing the tar from running.

15.4.13.2 Coal tarring new surface

Preparation of surface: This shall be done as specified in 15.4.2 above, except that sand papering is not necessary. Where iron work is to be painted it shall be freed from scales and rust before painting.

Application: The mixture shall be applied as hot as possible with a brush. The second coat shall be applied only after the first coat has thoroughly dried up. Where possible, the article to be tarred, shall be dipped in the hot mixture for better results. The quantity of tar to be used for the first or second coat shall be not less than 0.16 and 0.12 litre per sqm respectively. Thinning with kerosene oil shall be suitably done to ensure this.

The specifications described in 15.4.6 above shall hold good in all other respects, so far as they are applicable.

15.4.13.3 Coal tarring old surface

The work shall be done in the same manner as specified in 15.4.13.2 above except only one coat using 0.12 litre per sqm area shall be done.

15.4.14 Treatment with Creosote

The wood to be treated must be clean and absolutely dry. The creosote oil shall be of approved manufacturer. 20 kg of coal tar shall be pitch to 25 litres of creosote oil. The timber to be treated shall be dipped in the hot mixture for a minimum period of 4 minutes. (The mixture must be heated to just short of boiling).

15.5 Concrete/Masonry/Plastered Surfaces

15.5.1 General

Reference shall be made to the following Indian Standards:

IS No.	Subject
2395 (Part 1)-1994	Painting of Concrete, Masonry and Plaster Surfaces - Code of Practice: Part 1 - Operations and Workmanship
2395 (Part 2)-1994	Painting of Concrete, Masonry and Plaster Surfaces - Code of Practice: Part 2 – Schedules

15.5.2 Preparation of surface

The surface to be painted shall be allowed to dry for at least three months. Any existing fungus or mould growth shall be completely removed. All major cracks or defects in the plaster shall be cut out and made good. Before primer is applied holes and undulations shall be filled up with Plaster of Paris and rubbed smooth.

New Surfaces: Before painting, the surface shall be thoroughly brushed to remove all dirt and remains of loose and powered material.

In case of new brick-work the surface shall be cleaned of dirt by washing with water.

Any glazed area shall be roughened. Wire brushes shall be avoided in cleaning operations as these shall lead to difficulties from deposited particles of iron causing iron stains.

If before painting any portion of the wall shows sign of dampness, the causes shall be investigated and the damp surface shall be properly treated.

15.5.3 Application of primers and paints

This shall conform to specifications under para 15.3.4 above.

15.6 Miscellaneous

15.6.1 Lettering with paint

15.6.1.1 The letters and figures shall be to the heights and width as per approved drawing. These shall be stenciled or drawn in pencil and got approved before painting (e.g. "Barrier-free Parking Bay" or "its corresponding sign image"). They shall be of uniform size and finished neatly. The edges shall be straight or in pleasant smooth curves.

15.6.1.2 Lettering on new surface

The thickness of the lettering shall be as approved by the Engineer. Lettering shall be vertical or slanting as required. The colour of the paint shall be as directed by the Engineer (e.g. in the above mentioned text it shall be blue colour).

Two or more coats of paint shall be applied till uniform colour and glossy finish are obtained.

15.6.2 Knotting

Knotting shall be provided as specified under 15.1.2.4.5 above for materials and as directed by Engineer.

15.7 Measurements

15.7.1 All work shall be measured net in the decimal system as executed subject to the following limits, unless otherwise stated here-in-after:

(a) Dimensions shall be measured to the nearest 0.01 metre.

(b) Areas shall be worked out to the nearest 0.01 sq.mt.

15.7.2 No deduction shall be made for openings not exceeding 0.5 sqm each, and no addition shall be made for painting to beading mouldings, edges, jambs, soffits, sills etc. of such openings.

15.7.3 In case of fabricated structural steel and iron work, priming coat of paint shall be included with fabrication. Subsequent coat of paint shall be measured separately on the basis of the

weight of steel work and iron work or in square meters be. In case of the trusses if measured in sqm compound girders, stanchions, lattice girders and similar work actual areas shall be measured in sqm and no extra shall be paid for painting on bolts, heads, nuts, washers etc. If rivet heads, bolt heads (with or without washers), nuts (with or without washers and including projecting portion of shank) and painted out in a tint different from that of adjacent work these shall be enumerated and measured separately.

Note: No addition shall be made to the weight calculated for the purpose of measurement of steel and iron work for the paint applied either in shop or at site.

15.7.4 Painting up to 10 cms in width or in girth and not in conjunction with similar painted work shall be measured in running meters and shall include cutting to line where so required.

15.7.5 Shall articles up to 0.1 sqm of painted surfaces, where not in conjunction with similar painted work shall be enumerated.

15.7.6 Different surface shall be grouped into one general item areas of uneven surfaces being converted into equivalent plain areas in accordance with the table below:

Equivalent plain areas of uneven surfaces

S. N	Description of work	How measured	Multiplying Factor
(i)	Panelled or framed and braced or ledged and battened or ledged, battened and braced Joinery.	Measured flat (not girthed) including CHOWKHAT or frame. Edges, chocks, cleats etc., shall be included in the item.	1.33 (for each side).
(ii)	Flush Joinery.	Measured flat (not girthed) including CHOWKHAT or frame. Edges, chocks, cleats etc. shall be deemed to be included in the item.	1.20 (for each).
(iii)	Fully glazed or gauged joinery.	Measured flat (not girthed) including CHOWKHAT or frame. Edges, chocks, cleats etc., shall be deemed to be included in the item.	0.80 (for each side).
(iv)	Partly paneled and partly glazed or gauged joinery.	Measured flat (not girthed) including CHOWKHAT or frame. Edges, chocks, cleats etc., shall be deemed to be included in the item.	1 (for each side).
(v)	Fully venetianed or louvered joinery.	Measured flat (not girthed) including CHOWKHAT or frame. Edges, chocks, cleats etc., shall be deemed be included in the item.	1.80 (for each side).
(vi)	Weather boarding.	Measured flat (not gathered) supporting frame work shall not be measured separately.	1.20 (for each side).
(vii)	Wood shingle roofing.	Measured flat (not-girthed).	1.10 (for each side).
(viii)	Boarding with cover fillets and match boarding.	Measured flat (not-girthed).	1.05 (for each side).
(ix)	Tile and slate battening.	Measured flat overall; no deduction shall be made for open spaces.	0.80 (for painting all over).
(x)	Trellis (or JAFFRI) work one way or two way.	Measured flat over all; no deduction shall be made for open spaces; supporting members shall not be measured separately.	1 (for painting over).
(xi)	Guard bars, balustrades, gates, gratings, grills, expanded metal and railings.	Measured flat overall, no deduction shall be made for open spaces; supporting members shall not be measured separately.	1 (for painting all over).
(xii)	Gates and open palisade fencing including standards,	Measured flat overall; no deduction shall be made for open spaces, supporting members shall not be measured	1 (for painting all over).

S. N	Description of work	How measured	Multiplying Factor
	braces, rails, stays, etc.	separately (see note).	
(xiii)	Carved or enriched work.	Measured flat.	2 (for each side).
(xiv)	Steel roller shutters.	Measured flat for opening overall; jamb guides, bottom rails and locking arrangement etc. shall be included in the item. (Top cover shall be measured separately).	1.10 (for each side).
(xv)	Plain sheet steel doors and windows.	Measured flat (not girthed) including frame.	1.10 (for each).
(xvi)	Fully glazed or gauged steel doors and windows.	Measured flat (not girthed) including frame edges etc.	0.50 (for each).
(xvii)	Partly paneled and partly glazed or gauged steel doors.	-do-	0.80 (for each).
(xviii	Collapsible gate.	Measured flat (size of opening). No separately measurements shall be taken for the top and bottom guide rails, rollers, fittings etc.	1.50 (for painting all over).

Note: For painting open palisade fencing and gates etc., the height shall be measured from the bottom of the lowest rail, if the palisades do not go below it (or from the lower end of the palisades, if they project below the lowest rail), upto the top of rails or palisades whichever are higher, but not up to the top of standards when the latter are higher than the top rails or the palisades.

15.7.7 Where doors, window etc. are of composite types other than those included in above table, the different portion shall be measured separately with their appropriate coefficients, the centre line of the common rail being taken as the dividing line between the two portions. Measurement of painting of doors, windows, collapsible gates, rolling shutters etc. as given in table above shall be deemed to include painting if required all iron fittings in the same shade different shade for which no extra measurement shall be taken.

Measurement of painting of doors, windows, collapsible gates, rolling shutters etc. as given in table above shall be deemed to include painting if required all iron fittings in the same shade or different shade for which no extra measurement shall be taken.

When the two faces of door, window etc. are to be treated with different specified finishes measurable under separate items, the edge of frames and measurement of this will be deemed to be included in the measurement of the face treated with that finish.

In case where shutters are fixed on both faces of the frames, the measurement for the door frame & shutter on one face shall be taken in the manner already described, while additional shutter on the other face will be measured for shutter area excluding the frame.

Where shutters are provided with clearance exceeding 15 cm at top or/and bottom such openings shall be deducted from the overall measurements and relevant coefficients shall be applied to obtain the area payable.

Width of moulded work of all other kinds, as in hand rails, cornices, architraves shall be measured by girth.

15.7.8 Corrugated sheet surfaces and Nainital Pattern roof surfaces shall be included with plain surfaces after increasing the areas by the following percentages:

(a) Corrugated sheets	14 percent
(b) Nainital Pattern roof (Plain sheets with rolls)	10 percent
(c) Nainital Pattern roof with corrugated sheets	25 percent
(d) Asbestos cement sheets corrugated	20 percent
(e) Asbestos cement sheets semi-corrugated	20 percent

15.7.9 Gutters, rain water pipes, soil and ventilating pipes and steel poles shall be measured in running meters stating the size or girth. Fittings such as bonds, branches, heads, etc. shall be included in the length.

15.7.10 Painting on small articles, such as gate and turn straps, metal ceiling roses, metal switches block, heads and nuts of bolts, articles of builders hard ware and like when picked out in a different tint or not in conjunction with similar painted work shall be enumerated.

15.7.11 Treatment of dampness to be measured and paid separately for plastered surfaces.

15.7.12 Removal of fungus/mould growth and repairs to major cracks and defect in plaster shall be measured and paid for separately.

15.7.13 Scraping of the surface and application of suitable sealer shall be measured & paid for separately.

15.7.14 The application of sizing, staining and varnishing on wood work shall be measured in accordance with the rules for painting on wood work. Preparatory coat of hard drying undercoating of flatting varnish shall be measured separately.

15.7.15 Pre-treatment of new wood-based materials shall be measured and paid for separately.

15.7.16 The surface application of wood preservatives shall be measured in square meters irrespective of the girth or size and in similar way as described in above paras.

15.7.17 Tarring shall be measured as per painting.

15.7.18 Letters and similar items etc. stops, commas, hyphens, and the like shall be deemed to be included in the item.

15.8 Rate

Rate shall include the cost of all labour and materials involved in all operations described in workmanship.

1) Through rates include the carriage of all materials for 100 m on head load and 1 Km by mechanical transport. All other additional carriage shall be accounted for separately.
2) The through rates include the cost of materials, wastages, sand papers and brushes required for completion of any item. The labour rates include the cost of brushes, sand papers, scaffolding etc. and other appurtenant sundries.
3) The specification of paints especially paints and other goods shall be as notified by the Chief Engineer, Himachal Pradesh P.W.D. from time to time.

In case of lettering, the rate per cm height of letter shall hold good irrespective of the width of the letters or figures or the thickness of the lettering. All items shall be paid as per latest applicable HPPWD Schedule of Rates.

16. MISCELLANEOUS BUILDING WORKS

16.1 Providing and fixing galvanized M.S. tube

16.1.1 The galvanized mild steel tubes shall be of light class. These shall be laid in cement mortar 1:3 (1 cement : 3 coarse sand. While making the holes care shall be taken that the wall and fixtures are not damaged. In case of any damage, the same shall be repaired/replaced by the Contractor at his own cost to the satisfaction of Engineer.

16.2 G.I. woven wire mesh for fencing

The G.I. woven wire fencing shall be supplied & fixed by the fencing Contractor and shall be of mesh 50 mm x 150 mm. The fencing shall be fixed to any type of standard rails and fixtures. The host of rails has not been included in the item. The work shall be executed as per drawings or as directed by Engineer.

16.3 Course rubble hammer dressed stone open surface drain

Excavation of course rubble hammer dressed open surface drain shall be done to the required width and depth as specified. The high portion of ground shall be cut down, hollows and depressions filled up to the required level from the excavated soil and thoroughly rammed. Bases and sides shall be neatly dressed. Wherever required the filling shall be done with the excavated earth and the surplus earth disposed, of as per the directions of the Engineer.

The inner sizes open surface drain shall be as specified in the Work item. The minimum thickness of stones in the drain shall be 15 cm. The laying of the drain in masonry shall be as specified in the nomenclature of the Work item and as per the direction of Engineer. The other specifications for the materials and items used like earthwork excavation, lean concrete, stones, cement mortar, masonry, backfilling, plastering work, curing etc. shall conform to as specified in relevant sections above.

16.4 Measurements

16.4.1 M.S. Tubes

These shall be measured, in running metres, correct to a cm.

16.4.2 Fencing

G.I. woven wire mesh used for fencing shall be measured in square meters, correct to two places of decimals.

16.4.3 Course rubble hammer dressed open surface drains shall be measured in running metres correct to a cm.

16.5 Rate

The rate includes the cost of all materials and labour required for completing the work as per specifications. The rate also includes the contractor's profit @10% and overhead charges @5%.

1. The labour rates include carriage of all the materials involved for a particular item for a distance of 100 metres on head load and 1 kilometre by mechanical transport.
2. The labour rates include the cost on account of water, scaffolding and sundries.
3. The through rates include wastage of all the materials involved for any item.

The following points shall be taken in addition to above mentioned.

16.5.1 M.S. Tubes

The rate also includes the wastage of M.S. tube.

16.5.2 Fencing

All items shall be paid individually as mentioned in the schedule of rates.

16.5.3 The rate for construction of course rubble hammer dressed open surface drains includes cost of all materials and labour for all operations of earthwork excavation, lean concrete, stone masonry, backfilling, plastering work, curing etc.

17. PROVIDING AND LAYING R.C.C. PIPES

17.1 General

This work shall consist of furnishing and installing reinforced cement concrete pipe, of the type, diameter and length required at the locations shown on the drawings or as ordered by the Engineer and in accordance with the requirements of these specifications and as specified in the work item.

17.2 Material

All materials used in the construction of pipe culverts/drains shall conform to specifications given in section 8 above for materials and in other relevant sections, and as specified in the Work item.

Each consignment of cement concrete pipes shall be inspected, tested, if necessary, and approved by the Engineer either at the place of manufacture or at the site before their incorporation in the works.

17.3 Excavation for Pipe

The foundation bed for pipe culverts/drains shall be excavated true to the lines and grades shown on the drawings or as directed by the Engineer. The pipes shall be placed in shallow excavation of the natural ground or in open trenches cut in existing embankments, taken down to levels as shown on the drawings. In case of high embankments where the height of fill is more than three times the external diameter of the pipe, the embankment shall first be built to an elevation above the top of the pipe equal to the external diameter of the pipe of not less than five times the diameter of the pipe, after which a trench shall be excavated and the pipe shall be laid.

Where trenching is involved, its width on either side of the pipe shall not be less than 150 mm nor more than one-third diameter of the pipe. The sides of the trench shall be as nearly vertical as possible.

When during excavation material encountered is soft, spongy or other unstable soil, and unless other special construction methods are called for on the drawings or in special provisions, such unsuitable material shall be removed to such depth, width & length as directed by the Engineer. The excavation shall then be backfilled with approved granular material which shall be properly shaped, thoroughly compacted up to the specified level.

Where bed rock or boulder strata are encountered, excavation shall be taken down to at least 200 mm below the bottom level of the pipe with prior permission of the Engineer and

all rock/boulders in this area be removed and the space filled with approved earth free from stone or fragmented material, shaped to the requirements and thoroughly compacted to provide adequate supports for the pipe.

Trenches shall be kept free from water till pipes are installed and the joints have hardened.

17.4 Bedding for Pipe

The bedding surface shall provide a firm foundation of uniform density throughout the length of the culvert/drain, shall conform to the specified levels and grade, and shall be of one of the following types as specified on the drawings.

(A) Impermissible projection bedding

It is that method of bedding culvert/drain pipes in which little or no care is exercised to shape the foundation surface to fit the lower part of the pipe, exterior or to fill all spaces under and around the pipe with granular materials.

This type also includes the case of pipes on rock foundations in which an earth cushion is provided under the pipe but is so shallow that the pipe, as it settles under the influence of vertical load, approaches contact with the rock.

(B) Ordinary projection bedding

It is that method of bedding culvert/drain pipes under embankments in which the pipe is bedded with ordinary care in an earth foundation shaped to fit the lower part of the pipe exterior with reasonable closeness for at least ten percent of its overall height; and in which the remainder of the pipe it surrounded by granular materials, so placed as to completely fill all spaces under and adjacent to the pipe, all the work carried out under the general direction of a competent supervisor.

In case of rock foundations, the pipes are bedded on an earth cushion, shaped similar to the above, having a thickness under the pipe of not less than 1 cm for every 25 cm height of not less allowable thickness of 20 cm.

(C) First class bedding

Under first class bedding, the pipe shall be evenly bedded on a continuous layer of well compacted approved granular material, shaped concentrically to fit the lower part of the pipe exterior for at least ten percent of its overall height or as otherwise shown on the drawings. The bedding materiel shall be well graded sand or another granular material passing 4.75 mm sieve. The thickness of the bedding layer shall be as shown on the drawings and in no case shall it be less than 75 mm.

(D) Concrete cradle bedding

When indicated on the drawings or directed by the Engineer the pipe shall he bedded in a cradle constructed of concrete having a mix not leaner than M 150 conforming to specifications given in section 8 above. The shape and dimensions of the cradle shall be as indicated on the drawings. The pipes shall be laid on the concrete bedding before the concrete has set.

17.5 Laying of Pipe

(I) Reasonable care shall he exercised in loading, transporting and unloading of concrete pipes. Handling shall be such as to avoid impact. Gradual unloading by inclined plane or by chain blocks is recommended.

(II) All pipe sections and connections shall be inspected carefully before being laid. Broken or defective pipes or connections shall not be used.

(III) Pipes shall be lowered into trenches carefully. Mechanical appliances may be used.

(IV) No pipe shall be placed in position until the foundations have been approved by the Engineer. Where two or more pipes are to be laid adjacent to each other, they shall be separated by a distances equal to at least half the diameter of the pipe subject to a minimum of 450 mm.

The laying of pipes on the prepared foundation shall start from the outlet and proceed towards the inlet and be completed to the specified lines and grades. The pipes shall be fitted and matched so that when laid in work they form a culvert/drain with a smooth uniform invert.

Any pipe found defective or damaged during laying shall be removed at the cost of the Contractor.

(V) If the pipes have spigot and socket joints the socket ends shall face upstream. In the case of pipes, with joints to be made with loose collars, the collars shall be slipped

on before the next pipe is laid. Adequate and proper expansion joints shall be provided wherever necessary.

(VI) The sections of the pipe shall be joined together in such a manner that there shall be as little unevenness as possible along the inside of the pipe.

(VII) In cases where the foundation conditions are unusual, such as in the proximity of trees or poles, under existing or proposed tracks, under manholes etc., the pipe shall be encased in low strength concrete bedding or compacted sand or gravel as specified.

(VIII) In places where the natural foundation is inadequate, the pipes shall be laid either in a concrete cradle supported on proper foundations or any other suitably designed structure. If the concrete cradle bedding is used, the depth of concrete below the bottom of the pipe shall be at least one-fourth of the internal diameter of the pipe subject to a minimum of 10 cm and to a maximum of 30 cm. The concrete shall extend up to the sides of the pipes at least to a distance of one-fourth of the outside diameters for pipes 30 cm & over in diameter. The pipe shall be laid in this concrete bedding before the concrete has set.

(IX) When the pipe is laid in a trench in rock, hard clay, shale or other hard material the space below the pipe shall be excavated and replaced with an equalizing bed of concrete, sand or compacted earth. In no place shall the pipe be laid directly on such hard materials.

(X) Any one of the three methods as illustrated in Fig. 33 and defined under 17.4 (A), (B), (C) above may be employed for bedding of pipes in trenches.

(XI) Trenches shall be kept free from water until the material in the joint has hardened.

(XII) When the pipe is closed and the trench liable to be flooded by rain, care shall be takers to prevent the pipe from floating.

(XIII) Walking or working on the completed pipe shall not be permitted until the trench has been back filled to a height of at least 30cm over the pipe, except as may be necessary in tamping and back filling.

(XIV) Pipes under embankment shall perfectly be laid with a projection ratio not greater than 0.7. A trench, even of shallow depth, shall be excavated to decrease the projection, any one of the methods as illustrated in Fig. 33 and defined in 17.4 (B), (C) & (D) above may be employed for bedding of pipes in culvert/drain condition.

(XV) In case of embankment of low/medium heights, following considerations shall apply.

In the case of pipes 60 cm or less in diameter, the embankment shall be constructed to an elevation 15 cm above the level proposed for the top of the pipe after which the trench shall be excavated and the pipe installed.

(XVI) Heavy stones shall neither be dropped on the top of the pipe nor shall be allowed to roll down the side of the embankment against the pipe.

17.6 Jointing

The pipes shall be jointed either by collar joint or by flush joint. In the former case, tee collars shall be of RCC 150 to 200 mm wide and having the same strength as the pipes to be jointed. Caulking space shall be between 13 and 20 mm according to the diameter of the pipes. Caulking material shall be slightly wet mix of cement and sand in the ratio of 1:2 rammed with caulking irons. Before caulking the collar shall be so placed that its cantre coincides with the joint and an even annular space is left between the collar and the pipe.

Flush joint may he internal flush joint or external flush joint. In either case, the ends of the pipes shall be specially shaped to form a self-centering joint with a jointing space 13 mm wide. The jointing space shall be filled with cement mortar, 1 cement to 2 sand, mixed sufficiently dry to remain in position when forced with a trowel or rammer. Care shall be taken to fill all voids and excess mortar shall be removed.

For jointing pipe line under light hydraulic pressure, the recess at the end of the pipe shall be filled with jute braiding dipped in hot bitumen or other suitable approved compound. Pipes shall be so jointed that bitumen ring of one pipe shall set into the recess of the next pipe. The ring shall be thoroughly compressed by jacking or by any other suitable method.

All joints shall be made with care so that their interior surface is smooth and consistent with the interior surface of the pipes. After finishing the joint shall be kept covered and damp for at least 4 days.

17.7 Back Filling

Trenches shall be backfilled immediately after pipes have been laid and jointing material has hardened. The backfill soil shall be clean, free from boulders, large roots, excessive amounts of sods or other vegetable matter, and lumps, and shall be approved by the Engineer. Back filling up to 0.3 m above the top of the pipe shall be carefully done and the soil thoroughly rammed, tamped or vibrated in layers not exceeding 150 mm, particular care being taken to thoroughly consolidate the materials under the haunches of the pipe.

Filling of the trench shall be carried out simultaneously on both sides of the pipe in a such a manner that unequal pressures do not occur.

In case of high embankments, after filling the trench upto the top of the pipe in the above said manner, a loose fill of a depth equal to external diameter of the pipe shall be placed over the pipe before further layers are added and compacted.

17.8 Opening to Traffic

No traffic shall be permitted to cross the pipe line unless the earth filling above the latter is at least 0.6 m.

17.9 Measurements for Payment

R.C.C. pipe culverts/drains shall be measured along their centre between the inlet and outlet ends in linear metres correct to a cm.

Selected granular material and separately as laid, be measured in m^3

17.10 Rate

The rate for the pipe shall include the cost of pipe including loading, unloading, hauling, handling, laying in position and jointing complete.

Ancillary works such as excavation including backfilling, concrete and masonry shall be paid for separately, as provided under the respective Clauses of the Specifications.

Other relevant Specifications are as follows:

1. PRELAMINATED PARTICLE BOARDS

1.1 Prelaminated particle boards are available in two grades namely Grade I and II as per IS: 12823. Each grade is further classified in four types; namely Type –I, II, III, IV.

1.2 Material

1.2.1 Particle Board Prelaminated particle board Grade-1 (FPT–I or graded wood particle board FPT-I) bonded with BWP type synthetic resin and prelaminated conforming to IS: 12823 Grade-I, type II or I shall be used.

1.2.2 *Impregnated Base Paper* : Printed or plain coloured absorbent base paper having a weight of 60-140 g/m^2 impregnated in a suitable synthetic resin and dried to a volatile content of 4-8 percent shall be used for prelamination on both surfaces of particle board.

1.2.3 *Impregnant Overlay:* An absorbent tissue paper having a weight of 18-40 g/m^2 impregnated in a suitable synthetic resin and dried to volatile content of 4-8 percent.

1.3 Dimension and Tolerances

1.3.1 Dimensions of prelaminated particle boards shall be as follows:

Length: The length of prelaminated particle boards shall be 4.8, 3.6, 3.0, 2.7, 2.4, 2.1, 1.8, 1.5, 1.2, 1.0 and 0.9 metres.

Width: The width of prelaminated particle boards shall 1.8, 1.5, 1.2, 1.0, 0.9, 0.6 and 0.45 metres.

Thickness: The thickness of prelaminated particle boards shall be 6, 9, 12, 15, 20, 25, 30, 35, 40 and 45 mm.

1.3.2 *Tolerances:* Tolerances on the nominal sizes of finished boards shall be as given below:

Dimension	Tolerance
Length	+ 6 mm
	- 0
Width	+ 3 mm
	- 0
Thickness	5 percent
Edge straightness	2 mm per 1000 mm or 0.2 percent
Squareness	2 mm per 1000 mm or 0.2 percent

Note: Edge straightness and squareness shall be tested as per IS: 12823.

1.4 Sampling and Inspection

The number of prelaminated particle board to be selected from a lot shall be in accordance with the table given below:

Lot Size	Number of prelaminated boards to be selected
Upto 50	2
51 to 100	3
101 to 200	4
201 to 300	5
301 to 500	7
501 and above	10

1.4.1 The prelaminated particle boards shall be selected at random (refer IS: 4905). In order to ensure randomness of selection, all the prelaminated particle boards in the lot may be arranged in a serial order and every rth prelaminated particle board may be selected till the required number is obtained, 'r' being the integral part of N/n, where N is the lot size and n is the sample size.

1.4.2 All board selected as given in para 1.4.1 above shall be tested as specified in IS: 2380 (Part-2) for length, width, thickness, edge straightness and squareness shall comply with the requirements specified under para 1.3.2 above.

1.5 Testing and Number of Tests

For each of particle board selected as per para 1.4 above, test specimens shall be cut out from portion 150 mm away from the edges for tests and tests shall be carried out as per IS: 12823.

1.6 Criteria for Conformity

A lot shall be considered as in conformity to the requirements of the specification if no group of specimens for any of the characteristics fails to meet the conditions as prescribed in paras 1.3 & 1.5 above of this specification.

In case of a failure, double sample shall be taken from the lot for testing. The lot shall be considered as passed, if all these samples conform to the specified requirement.

1.7 Marking

Each prelaminated particle board shall be legibly and indelibly marked on any of its edges with following:

(a) Indication of source of manufacturer

(b) Grade and type of prelaminated particle board

(c) Thickness

(d) Batch number and year of manufacture.

2. EXTERIOR PAINTING ON WALL

2.1 Material

The paint shall be (Weather proof exterior grade emulsion of approved design/Textured exterior paint/Acrylic smooth exterior paint/Premium acrylic smooth exterior paint) as specified or of approved brand and manufacture.

This paint shall be brought to the site of work by the Contractor in its original containers in sealed condition. The material shall be brought in at a time in adequate quantities to suffice for the whole work or at least a fortnight's work. The materials shall be kept in the joint custody of the Contractor and the Engineer. The empty containers shall not be removed from the site of work till the relevant item of work has been completed and permission obtained from the Engineer.

2.2 Preparation of Surface

For new work, the surface shall be thoroughly cleaned off all mortar dropping, dirt dust, algae, fungus or moth, grease and other foreign matter of brushing and washing, pitting in plaster shall make good, surface imperfections such as cracks, holes etc. should be repaired using white cement. The prepared surface shall have received the approval of the Engineer after inspection before painting is commenced.

2.3 Application

Base coat of water proofing cement paint:

2.3.1 All specifications in respect of base coat of water proofing Cement Paint shall be as described below.

2.3.1.1 Material

The Cement Paint shall be (conforming to IS: 5410) of approved brand and manufacture.

The other paint work conditions when brought to site shall be as per specifications given in second para in 2.1 above.

2.3.1.2 Preparation of Surface

For New Work, the surface shall be thoroughly cleaned of all mortar dropping, dirt dust, algae, grease and other foreign matter by brushing and washing. Pitting in plaster shall be made good and a coat of water proof Cement Paint shall be applied over patches after wetting them thoroughly.

2.3.1.3 Preparation of Mix

Cement Paint shall be mixed in such quantities as can be used up within an hour of its mixing as otherwise the mixture will set and thicken, affecting flow and finish. Cement Paint shall be mixed with water in two stages. The first stage shall comprise of 2 parts of cement Paint and one part of water stirred thoroughly and allowed to stand for 5 minutes. Care shall be taken to add the Cement Paint gradually to the water and not vice versa. The second stage shall comprise of adding further one part of water to the mix and stirring thoroughly to obtain a liquid of workable and uniform consistency. In all cases the manufacturer's instructions shall be followed meticulously.

The lids of Cement Paint drums shall be kept tightly closed when not in use, as by exposure to atmosphere the Cement Paint rapidly becomes air set due to its hygroscopic qualities.

In case of Cement Paint brought in gunny bags, once the bag is opened, the contents should be consumed in full on the day of its opening. If the same is not likely to be consumed in full, the balance quantity should be transferred and preserved in an airtight container to avoid its exposure to atmosphere.

2.3.1.4 Application

2.3.1.4.1 The solution shall be applied on the clean and wetted surface with brushes or spraying machine. The solution shall be kept well stirred during the period of application. It shall be applied on the surface which is on the shady side of the building so that the direct heat of the sun on the surface is avoided. The method of application of cement Paint shall be as per manufacturer's specification. The completed surface shall be watered after the day's work.

2.3.1.4.2 The second coat shall be applied after the first coat has been set for at least 24 hours. Before application of the second or subsequent coats, the surface of the previous coat shall not be wetted.

2.3.1.4.3 For new work, the surface shall be treated with three or more coats of water proof cement Paint as found necessary to get a uniform shade.

2.3.1.4.4 For old work, the treatment shall be with one or more coats as found necessary to get a uniform shade.

2.3.1.5 Precaution

Water proof cement Paint shall not be applied on surfaces already treated with white wash, colour wash, distemper dry or oil bound, varnishes, Paints etc. It shall not be applied on gypsums, wood and metal surfaces.

If water proofing cement is required to be applied on existing surface, previously treated with white wash, colour wash etc., the surface shall be thoroughly cleaned by scrapping off all the white wash, colour wash etc. completely. Thereafter, a coat of cement primer shall be applied followed by two or more coat of water proof cement.

2.3.1.6 The specifications in respect of scaffolding, protective measures, measurements and rate shall be as described below. The coefficient for Cement Paint on RCC Jalli shall be the same as provided for painting trellis for Jaffri work one-way or two-way i.e. 2 (for painting all over) measured flat overall, no deduction shall be made for open spaces, supporting members shall not be measured separately.

2.3.1.6.1 Scaffolding

2.3.1.6.1.1 Wherever scaffolding is necessary, it shall be erected on double supports tied together by horizontal pieces, over which scaffolding planks shall be fixed. No ballies, bamboos or planks shall rest on or touch the surface which is being white washed/painted.

2.3.1.6.1.2 For all exposed brick work or tile work, double scaffolding having two sets of vertical supports shall be provided. The supports shall be sound and strong, tied together with horizontal pieces over which scaffolding planks shall be fixed.

Note: In case of special type of brick work, scaffolding shall be got approved from the Engineer in advance.

2.3.1.6.1.3 Where ladders are used, pieces of old gunny bags shall be tied on their tops to avoid damage or scratches to walls.

2.3.1.6.1.4 For white washing/painting the ceiling, proper stage scaffolding shall be erected.

2.3.1.6.2 Protective Measures

Doors, windows, floors, articles of furniture etc. and such other parts of the building not to be white washed/painted, shall be protected from being splashed upon. Splashings and droppings, if any shall be removed by the Contractor at his own cost and the surfaces cleaned. Damages if any to furniture or fittings and fixtures shall be recoverable from the Contractor.

2.3.1.6.3 Measurements

2.3.1.6.3.1 Length and breadth shall be measured correct to a cm. and area shall be calculated in sqm correct to two places of decimals.

2.3.1.6.3.2 Measurements for Jambs, Soffits and Fills etc. for openings shall be as described below.

Deductions in measurements, for opening etc. will be regulated as follows:

(a) No deduction will be made for openings or ends of joists, beams, posts, girders, steps etc. upto 0.5 sqm in area and no additions shall be made either, for the jambs, soffits and sills of such openings. The above procedure will apply to both faces of wall.

(b) Deduction for opening exceeding 0.5 sqm but not exceeding 3 sqm each shall be made for reveals, jambs, soffits sills, sills, etc. of these openings.

(i) When both faces of walls are plastered with same plaster, deductions shall be made for one face only.

(ii) When two faces of walls are plastered with different types of plaster or if one face is plastered and other is pointed or one face is plastered and other is unplastered, deduction shall be made from the plaster or pointing on the side of the frame for the doors, windows etc. on which width of reveals is less than that on the other side but no deduction shall be made on the other side.

Where width of reveals on both faces of wall are equal, deduction of 50% of area of opening on each face shall be made from area of plaster and/or pointing as the case may be.

(iii) For opening having door frame equal to or projecting beyond thickness of wall, full deduction for opening shall be made from each plastered face of wall.

(c) For opening exceeding 3 sqm in area, deduction will be made in the measurements for the full opening of the wall treatment on both faces, while at the same time, jambs, sills and soffits will be measured for payment.

In measuring jambs, sills and soffits, deduction shall not be made for the area in contact with the frame of doors, windows etc.

2.3.1.6.3.3 Corrugated surfaces shall be measured flat as fixed and the area so measured shall be increased by the following percentages to allow for the girthed area:

Corrugated non-asbestos cement sheet	20%
Semi corrugated non-asbestos cement sheet	10%

2.3.1.6.3.4 Cornices and other such wall or ceiling features, shall be measured along the girth and included in the measurements.

2.3.1.6.3.5 The number of coats of each treatment shall be stated. The item shall include removing nails, making good holes, cracks, patches etc. not exceeding 50 sqcm each with material similar in composition to the surface to be prepared.

2.3.1.6.3.6 Work on old treated surfaces shall be measured separately and so described.

2.3.1.6.4 Rate

The rate shall include all material and labour involved in all the operations described above.

2.3.2 Before pouring into smaller containers for use, the paint shall be stirred thoroughly in its container, when applying also the paint shall be continuously stirred in the smaller containers so that its consistency is kept uniform. Dilution ratio of paint with potable water can be altered taking into consideration the nature of surface climate and as per recommended dilution given by manufacturer. In all cases, the manufacturer's instructions & directions of the Engineer shall be followed meticulously.

The lids of paint drums shall be kept tightly closed when not in use as by exposure to atmosphere the paint may thicken and also be kept safe from dust.

2.3.3 Paint shall be applied with a brush on the cleaned and smooth surface. Horizontal strokes shall be given, First and vertical strokes shall be applied immediately afterwards. This entire operation will constitute one coat. The surface shall be finished as uniformly as possible leaving no brush marks.

2.4 The specifications in respect of scaffolding, protective measures, measurements and rate shall be as described in para 2.3.1.6 above.

3. PRESSED CERAMIC TILE FLOORING (VITRIFIED TILE FLOORING)

3.1 Operations as described in 3.1.1 to 3.1.6 below shall be followed except the tiles shall conform to Table 12 of IS: 15622 (Tiles with water absorption E ≤ 0.08 per cent Group BIa) and the joint thickness in flooring shall not be more than 1 mm.

3.1.1 Pressed Ceramic Tiles

The tiles shall be of approved make and shall generally conform to IS: 15622. They shall be flat, and true to shape and free from blisters crazing, chips, welts, crawling or other imperfections detracting from their appearance. The tiles shall be tested as per IS: 13630.

Classification and Characteristics of pressed ceramic tiles shall be as per IS: 13712.

The tiles shall be square or rectangular of nominal size. Table 1, 3, 5, and 7 of IS: 15622 give the modular preferred sizes and Table 2, 4, 6 and 8 give the most common non-modular sizes. Thickness shall be specified by the manufacturer. It includes the profiles on the visible face and on the rear side.

Manufacturer/supplier and party shall choose the work size of tiles in order to allow a nominal joint width upto 2 mm for unrectified floor tiles and upto 1 mm for rectified floor tiles. The joint in case of spacer lug tile shall be as per spacer. The tiles shall conform to Table10 of IS: 15622 with water absorption 3 to 6% (Group BII).

The top surface of the tiles shall be glazed. Glaze shall be either glossy or matt as specified. The underside of the tiles shall not have glaze on more than 5% of the area in order that the tile may adhere properly to the base. The edges of the tiles shall be preferably free from glaze. However, any glaze if unavoidable, shall be permissible on only upto 50 per cent of the surface area of the edges.

3.1.2 Coloured Tiles

Only the glaze shall be coloured as specified. The sizes and specifications shall be the same as for the white glazed tiles.

3.1.3 Decorative Tiles

The type and size of the decorative tiles shall be as follows:

(i) Decorated white back ground tiles

The size of these tiles shall be as per IS: 15622.

(ii) Decorated and having coloured back-ground

The sizes of the tiles shall be as per IS: 15622.

3.1.4 Preparation of Surface and Laying

3.1.4.1 Base concrete or the RCC slab on which the tiles are to be laid shall be cleaned, wetted and mopped. The bedding for the tile shall be with cement mortar 1:4 (1 cement : 4 coarse sand) or as specified. The average thickness of the bedding shall be 20 mm or as specified while the thickness under any portion of the tiles shall not be less than 10 mm.

3.1.4.2 Mortar shall be spread, tamped and corrected to proper levels and allowed to harden sufficiently to offer a fairly rigid cushion for the tiles to be set and to enable the mason to place wooden plank across and squat on it.

3.1.4.3 Over this mortar bedding neat grey cement slurry of honey like consistency shall be spread at the rate of 3.3 kg of cement per square metre over an area upto one square metre. Tiles shall be soaked in water washed clean and shall be fixed in this grout one after another, each tile gently being tapped with a wooden mallet till it is properly bedded and in level with the adjoining tiles. The joints shall be kept as thin as possible and in straight lines or to suit the required pattern.

3.1.4.4 The surface of the flooring during laying shall be frequently checked with a straight edge about 2 m long, so as to obtain a true surface with the required slope. In bath, toilet W.C. kitchen and balcony/verandah flooring, suitable tile drop or as shown in drawing will be given in addition to required slope to avoid spread of water. Further tile drop will also be provided near floor trap.

3.1.4.5 Where full size tiles cannot be fixed these shall be cut (sawn) to the required size, and their edge rubbed smooth to ensure straight and true joints.

Tiles which are fixed in the floor adjoining the wall shall enter not less than 10 mm under the plaster, skirting or dado.

3.1.4.6 After tiles have been laid surplus cement slurry shall be cleaned off.

3.1.5 Pointing and Finishing

The joints shall be cleaned off the grey cement slurry with wire/coir brush or trowel to a depth of 2 mm to 3 mm and all dust and loose mortar removed. Joints shall then be flush pointed with white cement added with pigment if required to match the colour of tiles. Where spacer lug tiles are provided, the half the depth of joint shall be filled with polysulphide or as specified on top with under filling with cement grout without the lugs remaining exposed. The floor shall then be kept wet for 7 days. After curing, the surface shall be washed and finished clean. The finished floor shall not sound hollow when tapped with a wooden mallet.

3.1.6 Measurements

Length and breadth shall be measured correct to a cm before laying skirting, dado or wall plaster and the area calculated in square metre correct to two places of decimal. Where coves are used at the junctions, the length and breadth shall be measured between the lower edges of the coves.

No deduction shall be made nor extra paid for voids not exceeding 0.20 square metre. Deductions for ends of dissimilar materials or other articles embedded shall not be made for areas not exceeding 0.10 square metre.

Areas, where glazed tiles or different types of decorative tiles are used will be measured separately.

3.2 Rate

The rate for flooring shall include the cost of all materials and labour involved in all the operations described above. Nothing extra shall be paid for the use of cut (sawn) tiles in the work.

4. PVC RAIN WATER PIPES

4.1 PVC Pipes

Unplasticized polyvinyl chloride PVC pipes and fittings shall conform to Indian Standards and shall be perfectly smooth internally and externally, and clean and free from groovings and other defects, and cylindrical. These shall be neatly finished and carefully fitted both inside and outside. The end shall be clearly cut and shall be square to the axis of the pipe. The end may be chamfered on the plain sides. Slight shallow longitudinal grooves or irregularities in the wall thickness shall be permissible provided the wall thickness remains within the permissible limit.

The PVC rain water pipes and fittings shall be factory made of D-Plast / Finolex / approved equivalent make, as specified and as directed by the Engineer. The pipe shall conform to working pressure specified in the Work item. The colour of the pipes and fittings to be used shall be dark shade of grey or as directed by the Engineer from a range of colour shades keeping in mind the due context of its compatibility with the finishing colour of the building.

4.1.1 Dimensions

PVC rain water pipes shall be of the dia specified in the description of the item and shall be in full length of 1.85 m as per its design either plain or with sliding/grooved socket unless shorter lengths are required at junctions with fittings. Tolerances on specified length shall be +10 mm and –0 mm.

Mean outside diameter, outside diameter at any point and wall thickness for Type–A manufactured plain or with sliding/grooved socket shall be as given in Table-1 of IS: 13592.

4.1.2 Marking

Each pipe shall be clearly and indelibly marked with the following information at proper intervals:

(a) Manufacturer's name or trade mark.

(b) Nominal outside dia of pipe.

(c) Type 'A'.

(d) Batch number.

4.1.3 Fixing and Jointing

4.1.3.1 Pipes shall be either fixed on face of wall or embedded in masonry, as required in the description of the item.

4.1.3.2 Pipes shall be jointed with an approved adhesive, and fixed to the face of the wall Plain pipes shall be secured to the walls at all joints with PVC clips by means of 50 x 50 x 50 mm hard wood plugs, screwed with M.S. screws of required length i/c cutting brick work and fixing in cement mortar 1:4 (1 cement : 4 coarse sand). The clips shall be kept about 25 mm clear off finished face of wall, so as to facilitate cleaning of pipes and any painting. Pipes shall be fixed perfectly vertical or to the lines as directed. The pipes shall be fitted to fittings with seal ring conforming to IS: 5382 allowing 10 mm gap for thermal expansion.

4.1.3.3 The pipes shall be fixed perfectly vertical or to the lines as directed.

4.1.3.4 Where pipes are to be embedded in masonry, these shall be fixed in masonry work as it proceeds. In such cases care shall be taken to keep the pipes absolutely vertical or to the line as directed by the Engineer. The pipe shall have a surrounding of 12 mm minimum

thickness of mortar at every portion of the external surface. The mortar shall be of the same mix as is used in the masonry. The pipe lengths shall be properly jointed with an approved adhesive prior to it being getting embedded in masonry.

4.1.3.5 The open end of the pipe shall be kept closed till the next length is fitted and jointed, to prevent any brick bats or concrete or pieces of wood falling in and choking the pipe.

4.1.3.6 The jointing with adhesive shall be such that there is no gap in between two pipe or pipe/fitting ends, and the same shall be tested for any leakage. Where openable fittings are used, when fitted tight the same shall also be tested for any leakage.

4.1.4 Measurements

The pipes shall be measured net when fixed correct to a cm, excluding all fittings along its length. The PVC clips shall be enumerated in numbers.

4.1.5 Rate

The rate shall include when the pipe is fixed on the face of wall, the cost of all materials and labour involved in all the operations described above including jointing with approved adhesive, and completed with PVC clips fixed with wall plugs, as per specifications, drawing and as directed by the Engineer.

4.2 Accessories for PVC Rain Water Pipes

4.2.1 Fittings

PVC pipe accessories such as bends of various degrees, heads, offsets of different projections, branches and shoes that fit the corresponding sizes of 75 mm, 100 mm, and 150 mm diameter shall be provided and fixed.

Bends shall be of the nearest standard degree as actually required at site. Heads shall be of the flat or corner type as required. Offsets shall be of the projection as stipulated in the description of the item. Branches shall be single or double as described in the item and shall be of the nearest standard degree as actually required. Standard shoes shall be provided and fixed as per the pipe diameter used.

4.2.2 Dimensions

Fittings shall be of standard size & of the diameter specified in the description of the item.

The thickness of the fittings and details of pipe's sliding/grooved socket shall be same as those of the corresponding size of straight pipes. The fittings shall be smooth from inside and outside. The minimum wall thickness of fittings shall be 3.2 mm.

4.2.3 Fixing and Jointing

Fixing and jointing shall be as specified in 4.1.3 above. The fittings shall be supplied with grooved socketed ends with square grooves and provided with Rubber Gasket conforming to IS: 5382. The plain ends of the fittings should be chamfered. The fittings shall be joined with the help of Rubber lubricant. The details of fittings refer IS: 13592.

4.2.4 Measurements

The fittings and PVC clips shall be measured by numbers.

4.2.5 Rate

The rate shall include in the case of fittings fixed on the face of wall, the cost of all materials and labour involved in all the operations described above including jointing with approved adhesive, and completed with PVC clips fixed with wall plugs, as per specifications, drawing and as directed by the Engineer.

Note: These pipes shall be used only in shaft or unexposed location to avoid damage to these pipes due to willful act.

5. WEEP HOLES IN RETAINING / BREAST WALLS

5.1 The pipes to be used shall be specified PVC (D-Plast/Finolex/or approved equivalent) pipes for weep holes of working pressure not less than 4.5 kg/sq.cm. when provided in retaining / breast walls.

5.2 These walls shall be provided with proper weep hole provision for cross sub-surface drainage, as follows:

5.2.1 The weep holes shall be provided through specified PVC (D-Plast/Finolex/or approved equivalent) pipe of 75 mm diameter, the pipe being grey in colour (i.e. matching with the RR stone masonry shade), and laid with an outward slope of 1:8 across the wall.

5.2.2 The weep holes shall start at 0.3 m above ground level / built-drainage line top level.

5.2.3 The weep holes shall be laid in horizontal layers with vertical position staggered in the next layer. The weep hole distance shall be maximum 1.8 m c/c horizontally, and maximum 0.9 m vertically (staggered position) in the next horizontal layer, and shall be actually laid at the horizontal and vertical staggered positions as directed by the Engineer.

6. INTERLOCKING GRASS PAVER BLOCKS FOR PARKING SURFACE

6.1 Use factory made heavy duty vibro-compacted precast cement concrete interlocking paver blocks 80 mm deep for surface parking lots with grass laying space created when joined (known as grass paver blocks) laid over an eco-friendly bedding & crust base, i.e. an amended crust of graded crushed or washed aggregate course laid in 3-layers:

6.1.1 First layer from top being the bedding course 2.0 inches (50 mm) thick beneath the paving surface blocks, consisting of coarse sand material which is also used as filler material for filling joints of such interlocking blocks as the joints act as drainage voids. Use a sand material to fill the joint spaces to provide adequate vertical block interlock. Once the blocks after having been laid over the screeded uncompacted sand, the paving surface may be nominally compacted. If course sand filler material is used the gradation for this material shall be 100% passing the No. 16 sieve and 10% passing the No. 200 sieve. As an alternative to coarse sand about up to 5 mm size if not available, graded pea gravel size crushed or washed stones can also be used containing normally up to 3/8 inch size gravel i.e. 9.5 mm in size to maximum 1/2 inch size gravel i.e. 12.5 mm). The specification for sieve passing percentages of grading such sand / pea gravel bedding course is as follows:

Sieve Size	1/2 inch	3/8 inch	No. 4	No. 8	No. 16
	12.50 mm	9.50 mm	4.75 mm	2.36 mm	1.16 mm
% Passing	100	85 to 100	10 to 30	0 to 10	0 to 5

6.1.2 The paving surface blocks and bedding layer are placed over an open-graded crushed or washed stone base properly rolled/compacted in separate layers (containing two layers of base and sub-base courses) with no infiltration to the soil subgrade. The sub-surface drainage of such amended soil layers with no infiltration assumed is directed to an outlet along and below the lowest level edge of sub-base via perforated PVC drain pipes about 4 inches in diameter with the outfall pipe sloped to storm water drain/sewer or stream.

The second layer i.e. the base layer is normally of 6 inches thickness or more as required consisting of gravel/stone size maximum up to 1-1/2 inches i.e. 37.5 mm. The specification for sieve passing percentages of grading such a base layer is as follows:

Sieve Size	1-1/2 inches	1 inch	1/2 inch	No. 4	No. 8
	37.5 mm	25.00 mm	12.50 mm	4.75 mm	2.36 mm
% Passing	100	95 to 100	25 to 60	0 to 10	0 to 5

The third layer i.e. the sub-base layer is normally of 9 inches thickness or more as required consisting of stone size maximum up to 3 inches i.e. 75 mm. The specification for sieve passing percentages of grading such a sub-base layer is as follows:

Sieve Size	3 inches	2-1/2 inches	2 inches	1-1/2 inches	3/4 inch
	75 mm	63 mm	50 mm	37.5 mm	19 mm
% Passing	100	90 to 100	35 to 70	0 to 15	0 to 5

6.1.3 These base and sub-base layers are rolled/compacted to minimum 90% Proctor density (of maximum dry density).

6.1.4 The natural soil subgrade should be compacted to at least 95% of maximum dry density. The cross-slope of the sub-base / natural soil subgrade would conform to the finish grade of the parking surface and sloped to drain, and be at least 1% more than the abutting road surface camber (i.e. about 3% minimum for storm water drainage slope).

6.1.5 As required 6 inches high (minimum 1 ft embedded in crust) & 6 inches wide kerb edges or edge restraints is provided on top of parking surface to support the paving surface blocks. As required, trenches shall first be made along the edge of the parking surface to receive the precast kerb stones / cast-in-situ kerb edges of cement concrete of specified grade complete with shuttering, concreting, curing etc. and as directed by the Engineer. The bed of the trenches shall be compacted manually with steel rammers to a firm and even

surface and then the kerb blocks shall be set in cement mortar of specified proportion. The joints of kerb blocks with or without grooves shall be staggered and shall be not more than 10 mm (thickness of joints except at sharp curve shall not be more than 5 mm). Wherever specified all joints shall be filled with cement mortar 1:3 (1 cement : 3 coarse sand) and pointed with cement mortar 1:2 (1 cement : 2 fine sand) which shall be cured for 7 days. The necessary drainage openings or cut-outs of specified sizes shall be made through the kerb as per drawings or as directed by the Engineer for overflow drainage connection to storm water drain/sewer or stream. For finishing, berms and edges shall be restored and all surplus earth including rubbish etc. disposed off as directed by the Engineer. Nothing extra shall be paid for this. Kerb/edge restraints shall be installed before paving begins so that the finished elevation for the bedding sand course can be set from the edge.

6.1.6 Edge pavers can be cut with a saw or block cutter to fit against the kerb restraint. When the gap between the pavers and the kerb edge exceeds 3/8 inch, it is recommended that the space shall be fitted with a cut paver.

6.1.7 The bedding sand shall be screeded down using the kerb/edge restraint as a guide. The bedding sand shall remain uncompacted until after the pavers are installed. No one shall walk on the bedding sand after it has been screeded and before the pavers are installed. The bedding sand shall be kept covered after delivering to the job site to assure uniform moisture content throughout the job.

6.1.8 Paving shall start at one point only in order that a uniform appearance is maintained throughout the surface. Pavers can be installed by hand or mechanically, depending on the type of paver and project requirements, directly over the uncompacted bedding sand. Compact the pavers to level using a mechanical plate vibrator. Vibration compaction shall not begin until a minimum of 20 square meters of pavers are laid. Vibrate two-times over. Do not vibrate within 1 meter of an unrestrained edge. Sweep the sand filler material to fill the joints and recompact with the vibrator to complete the interlock.

6.1.9 All paver blocks shall be sound and free from defects that would interfere with the proper placing of the block or impair the strength or performance of the construction. The paver block shall be constructed of cement concrete of M-50 grade and shall be high quality block specifically manufactured for the construction of paved surfaces and be of approved brand and manufacturer of repute and of approved quality. Pavers should have less than 5% water absorption by weight. Minimum strength of cement concrete as prescribed by manufacturer and as per direction of Engineer for the grade specified to be tested as per method mentioned in specification of subhead cement concrete of HPPWD Specifications (Vol. I), 1990.

6.2 Grass Work in Paver Blocks under Arboriculture and Gardening Specifications

6.2.1 General

6.2.1.1 The Arboriculture and Gardening operations shall be started on ground previously levelled and dressed to required formation levels and slopes.

6.2.1.2 For Arboriculture and Gardening works, the soil shall be free from kankar, moorum, brick bats, building rubbish etc.

6.2.1.3 In cases where unsuitable soil is met with, it shall be either removed or replaced or it shall be covered over to a thickness decided by the Engineer with good earth brought from approved sites.

6.2.1.4 In the course of excavation or trenching during Arboricultural and Gardening operations, any structures foundations etc. met with shall not be dismantled without pre-measurement, and prior to the written permission of the Engineer.

6.2.2 Supplying and Stacking Good Earth

6.2.2.1 Good Earth

The soil shall be agricultural soil of loamy texture, free from kankar, moorum, shingle, rocks, stone, brick bats, building rubbish and any other foreign matter. The earth shall be free froth clods or lumps of sizes bigger than 75 mm in any direction. It shall have pH value ranging between 6 to 8.5.

6.2.2.2 The material shall be stacked at site in stacks of size 2 m x 2 m x 0.25 m.

6.2.2.3 Measurements

Length, breadth and height of stacks shall be measured correct to a cm. The volume of the stacks shall be reduced by 20% for voids before payment, unless otherwise specified.

6.2.2.4 Rate

The rate shall include the cost of excavating the earth, breaking of clods, stacking at places, syndicated royalty if payable and carriage upto 100 metres on head load and 1 km by mechanical transport.

6.2.3 Supplying and Stacking Sludge

6.2.3.1 Sludge

It shall be obtained from a approved sewage disposal works.

6.2.3.2 It shall be transported to the site in lorries with efficient arrangements to prevent spilling enroute. It shall be stacked at site in stacks of size 2 m x 2 m x 0.25 m.

6.2.3.3 Measurements

Length, breadth and depth of stacks be measured correct to a cm. The volume of the stacks shall be reduced by 8% for looseness in stacking, to arrive at the net quantity for payment.

6.2.3.4 Rate

The rate shall include the cost of all labour and materials involved in the operations described above including carriage to site upto one km by mechanical transport and 100 metres on head load. The rate shall also include royalty if payable.

6.2.4 Supplying and Stacking Dump Manure

6.2.4.1 Dump Manure

Dump manure shall be of well decayed organic or vegetable matter obtained in the dry state from the municipal dump or other similar source approved by the Engineer. The manure shall be free from earth, stone, brick bats or other extraneous stuff.

Manure sieved through sieve of I.S. designation 16 mm is generally used for mixing with the excavated soil to be refilled in trenches for shrubbery, rose and vegetable garden and trees and lawns while that sieved through sieve of I.S. designation 4.75 mm is used for forming lawns for Tennis Courts, sports, etc.

6.2.4.2 Manure shall be supplied at site well screened through sieve of I.S. designation 16 mm or 4.75 mm as specified and directed by the Engineer. The screened manure shall be stacked at site in stacks of not less than 50 cm height and of volume not less than 3 cum.

6.2.4.3 Measurements

Length, breadth and height of stacks shall be measured correct to a cm. The volume of the stacks shall be reduced by 8% for looseness in stacking, to arrive at the net quantity for payment.

6.2.4.4 Rate

The rate shall include the costs of all labour and materials involved in all the operations described above; inclusive of carriage upto one km by mechanical transport and 100 metres on head load. The rate shall also include royalty if payable.

6.2.5 Spreading Sludge/Dump Manure and/or Good Earth

6.2.5.1 Good earth, sludge, and/or dump manure shall be removed from stacks by head load and spread evenly over the fine dressed surface to the thickness ordered by the Engineer. It shall be spread with a twisting motion to avoid segregation and to ensure that spreading is uniform over the entire area.

6.2.5.2 Measurements

The quantity of good earth, sludge and/or manure spread shall be determined by the differences in the volume of good earth, sludge or manure in stacks before and after spreading duly reduced for looseness in stacking by 20% of good earth and 8% of sludge or manure.

6.2.5.3 Rate

The rate shall include the cost of all labour etc. involved in all the operations described above, but does not include the cost of the good earth sludge or manure which shall be paid for separately unless, specifically described in the item. The rate shall also include carriage within a lead of 20 metres and lift upto 1.5 metres, unless otherwise specified in Work item.

6.2.6 Mixing of Good Earth and Sludge or Manure

6.2.6.1 The stacked earth shall before mixing, be broken down to particles of sizes not exceeding 6 mm in any direction. Good earth shall be thoroughly mixed with sludge or manure in specified proportion as described in the item or as directed by the Engineer. The mixing

shall be spread as described in 6.2.5.1 above to the thickness ordered by the Engineer.

6.2.6.2 Measurements

The quantity of good earth and sludge or manure mixed shall be determined by the difference in the volume of good earth, sludge or manure in stack, before and after spreading duly accounted for voids and looseness in stacks.

6.2.6.3 Rate

The rate shall include the cost of all labour and materials involved in all the operations described above, but does not include the cost of good earth, sludge or manure which shall be paid for separately, unless otherwise described in the item.

6.2.7 Grassing

6.2.7.1 Grass

Grass shall be fresh grass as specified or as directed by the Engineer, free from weed and rank vegetation but having 'Rhizomes' with sufficient nodes and shall be approved by the Engineer, before planting.

6.2.7.2 The area from where the grass roots are to be obtained shall be specified by the Engineer at the time of the execution of the work.

6.2.7.3 The soil shall be suitably moistened and then the operation of planting grass shall be commenced. The grass shall be dibbled at 15 cm, 7.5 cm, 5 cm apart in any direction or other spacing as described in the item. Dead grass and weeds shall not be planted. The Contractor shall be responsible for watering and maintenance of levels and the lawn for 30 days or till the grass forms a thick lawn free from weeds and fit for mowing, whichever is later or till the Work is completed if so specified for the Work. Generally planting in either direction at 15 cm, spacing is done in the case of large open spaces, at 7.5 cm, spacing in residential lawns and at 5 cm spacing for Tennis Courts and sport ground lawns.

6.2.7.4 Precautions

During the maintenance period, any irregularities arising in ground levels due to watering or due to trampling by labour or due to cattle straying thereon, shall be constantly made up to the proper levels with earth as available or brought from outside as necessary. Constant watch shall be maintained to ensure that dead patches are replanted and weeds are removed.

6.2.7.5 Measurements

Length and breadth of the lawn grassed shall be measured correct to a cm, and the area shall be calculated in square metre correct to two places of decimal

6.2.7.6 Rate

The rate shall include the cost of all labour and materials involved in all the operations described above, excluding, supply of requisite quantity of good earth if so needed for properly maintaining the levels of the lawns. The cost for grass shall be paid separately, unless specified otherwise.

6.2.8 The above mentioned good earth/sludge or manure mixture as base for grassing work and laying of grass is to be undertaken in the hollow portions of the grass paver blocks. The coverage of the grass paver block surface area has to be watered well-enough to ensure the satisfactory condition of grassing work is maintained until the Work is completed.

6.3 Measurements

The overall item of grass paver blocks surface area is to be measured in square meters, correct to two places of decimal.

6.4 Rate

The rate includes the cost of the material, labour, tools etc. required in all the operations described above to complete the Work item of grass paver block surface as specified and as directed by the Engineer.

6.5 Kerb edge blocks (6 inches wide) when used as wheel guards in the 90° parking bays (2.5 m x 6.0 m) shall be installed as 4 inches high on top of the parking surface with their outer face at a distance of 0.90 m from the end of parking bay, and the size of such kerb blocks preferably being 0.6 m in length (minimum 0.5 m) placed suitably as two blocks per parking bay with lateral wheel base considered as 1.5 m c/c. This item is to be measured in cubic meters correct up to two places of decimal.

b) Plumbing and Sanitation Fittings

For Plumbing and Sanitation Fittings, CPWD Specifications (Vol. 2), 2009 is being adopted.

1. WASH DOWN TYPE WATER CLOSET (EUROPEAN TYPE WC) [refer Fig. 35 & 36]

1.1 Water closets shall be of white vitreous china conforming to IS 2556 (Part-1) and 2556 (Part-2), as specified and shall be of "Wash down type". The closets shall be either of the two patterns (Pattern 1 & Pattern 2) and sizes as shown in Fig. 35 & 36, as specified in the Work item and Drawing. The closets shall be of one piece construction. Each water closet shall have not less than two holes having a minimum diameter of 6.5 mm for fixing to floor and shall have an integral flushing rim of suitable type. It shall also have an inlet or supply horn for connecting the flushing pipe of dimensions as shown in table in Fig. 35 & 36 the flushing rim may be boxed or open type. In the case of box rims adequate number of holes, on each side together with a slot opposite the inlet shall be provided. The flushing rim and inlet shall be of the self-draining type. The water closet shall have a weep hole at the flushing inlet. Each water closet shall have an integral trap with either 'S' or 'P' outlet with at least 50 mm water seal, with soil pipe in cement mortar 1:1 (1 cement : 1 sand). For P trap, the slope of the outlet shall be 14 degrees below the horizontal. Where required the water closet shall have an anti-siphonage 50 mm dia. vent horn on the outlet side of the trap with dimension conforming to those given in Fig. 35 and on either right or left hand or centre as specified set at an angle of 45 degrees and invert of vent hole not below the central line of the outlet. The inside surface of water closets and traps shall be uniform and smooth in order to enable an efficient flush. The serrated part of the outlet shall not be glazed externally. The water closet, when sealed at the bottom of the trap in line with the back plate, shall be capable of holding not less than 15 liters of water between the normal water level and the highest possible water level of the water closet as installed.

1.2 All exposed G.I., C.I. or lead pipes and fittings shall be painted with approved quality of paint and shade as specified. The painting work shall conform to specification described under Painting Specifications.

1.3 CP Health Faucet Set/Jet Spray pipe system with PVC pipe connection complete with all fittings of reputed/approved make shall be provided & fixed as per direction of Engineer.

1.4 All sanitary and plumbing work shall be carried out through licensed plumbers.

1.5 On completion of the work the site shall be cleaned and all rubbish disposed of as directed by the Engineer.

1.6 Various sanitary fittings described under Water Closet specification including fixing shall be numerated individually or in combination under relevant items of works as described below. When used in combination, specifications as described under relevant paras shall apply but nothing extra shall be paid for making connections required for successful functioning of the combination.

1.7 Fixing

The closet shall be fixed to the floor by means of 75 mm long 6.5 mm diameter counter-sunk bolts and nuts embedded in floor concrete.

1.8 Measurements

Water closets shall be measured in numbers.

1.9 Rate

Rate shall include the cost of all the materials and labor involved in all the operations described above.

2. FLUSHING CISTERNS

2.1 The flushing cisterns shall be automatic or manually operated high level or low level as specified, for water closets and urinals. A high level cistern is intended to operate with minimum height of 125 cm and a low level cistern with a maximum height of 30 cm between the top of the pan and the underside of the cistern. Follow the provision as specified in the Work item and the Drawing.

Cisterns shall be of following type (i) Vitreous China (IS: 774) for Flushing type (ii) Automatic Flushing Cistern (IS: 2326) and (iii) Plastic cisterns (IS: 7231).

2.2 Vitreous China Cisterns

The thickness of the body including cover shall be not less than 6 mm for Vitreous China Cisterns. The outlet of each syphon or stand pipe shall be securely connected to the cistern by means of lock nut. The cistern shall be free from manufacturing faults and other defects affecting their utility. All working parts shall be designed to operate smoothly and

efficiently. Cistern shall be mosquito proof. A cistern shall be considered mosquito proof only if there is no clearance anywhere which would permit a 1.6 mm wire to pass through in the permanent position of the cistern i.e. in the flushing position or filling position.

The breadth of a low level cistern, from front to back shall be such that the cover or seat, or both, of water closet pan shall come to rest in a stable position when raised.

The cistern shall be supported on two cast iron brackets of size as approved by the Engineer and embedded in cement concrete 1:2:4 block 100 mm x 75 mm x 150 mm. Connection between cistern and closet shall be made by means of 40 mm dia flush bend with rubber or G.I. inlet connection as specified. These shall be properly protected by suitable impervious paint. Alternatively the cisterns shall have two holes in the back side above the overflow level for screwing into the wall, supplemented by two cast iron wall supports. A 5 liters cistern, however, may be supported by larger brackets cast on the body of the cistern.

The cistern shall have a removable cover which shall fit closely on it and be secured against displacement. In designs where the operating mechanism is attached to the cover this may be made in two sections, but the section supporting the mechanism shall be securely bolted or screwed to the body.

The outlet fitting of each cistern shall be securely connected to the cistern. The nominal internal diameter of cistern outlet shall be not less than 38 ± 1mm for low level cisterns. The length of the outlet of the cistern shall be 37 ± 2 mm.

Ball valve shall be of screwed type 15 mm in diameter and shall conform to IS: 1703. The float shall be made of polyethylene as specified in IS: 9762. *(The design shall permit the cistern to fill in rapidly and close effectively when the level of water reaches the working water level.)*

In the case of manually operated cisterns the siphonic action of the flushing cistern shall be capable of being rapidly brought into action by the operating lever, but shall not self-siphon or leak. When tested according to IS: 774 the discharge rate shall be 10 ± 0.5 liter in 6 seconds and 5 ± 0.5 liter in 3 seconds for cisterns of capacities 10 liter and 5 liter respectively. The cisterns shall be so designed that there is no appreciable variation in the force of flush during the discharge of the required quantity of water. The cistern shall have a discharge capacity of 5 & 10 liters as specified in the Work item. When required to give a full flush, they shall respectively discharge 5 liters and 10 liters with variation of ± 0.5 liters.

The flush pipe shall be of (a) medium quality galvanized iron having internal diameter of 38 ± 1 mm for low level cistern. The flush pipe shall be of suitable length with bends etc. as required for fixing it with front or back inlet W.C. Pan. (b) Polyethylene pipes low density or high density (c) Unplasticised PVC pipes. For high density polyethylene and unplasticised PVC pipes, the outside diameter of the pipes shall be 40 mm. When PVC plumbing pipes are used the outside diameter of the pipe shall be 40 mm for high level cisterns and 50 mm for low level cisterns.

In case of low level cistern the flush pipe shall be a vertical pipe 30 cm long and having a nominal internal dia 38 ± 1 mm (except plastic flush pipes).

The CP Brass pipe/valve fittings like angle valve etc. shall be provided and fixed of reputed make and as per the specification approved by the Engineer. PVC connection pipe with brass union 300 mm length and 15 mm nominal bore with hexagonal check nuts and washers on either side of the connection shall be provided and fixed as directed by the Engineer.

2.2.1 Over Flow Pipe

(a) GI overflow pipe shall be of not less than 20 mm nominal bore and shall incorporate a non-corrodible mosquito proof brass cover having 1.25 mm dia perforation, screwed in a manner which will permit it to be readily cleaned or renewed when necessary. No provision shall be made whereby the overflow from the cistern shall discharge directly into the water closet or soil pipe without being detected.

The invert of the overflow pipe in the case of high level and low level cisterns shall be 19 mm minimum above the working water level. In case of overflow due to any reason water should drain out through the over flow pipe and not through the siphon pipe.

(b) The plastic overflow pipes shall be manufactured from high density polyethylene conforming to IS: 4984 or unplasticised P.V.C. conforming to IS: 4985.

2.2.2 Inlet and Overflow Holes

The cistern shall be provided with inlet and overflow holes, situated one at each end which shall be capable of accommodating an overflow pipe of not less than 20 mm nominal bore and a 15 mm size ball valve. The holes shall be cleanly cast or drilled and the adjacent surfaces shall be smooth.

2.2.3 Painting

The brackets shall be painted, if specified, with two or more coats of paint of approved shade and quality.

2.2.4 Measurements

Cistern, including all fittings, shall be measured in numbers.

2.2.5 Rate

The rate shall include the cost of all materials and labor involved in all the operations described above.

3. WASH BASINS (refer Fig. 37, 38, 39 & 40)

3.1 Wash basins shall be of white vitreous china conforming to IS: 2556 (Part-1) and IS: 2556 (Part-4), and the provision shall be as specified in the Work item and Drawing.

3.2 Wash basins either of flat back or angle back as specified shall be of one piece construction, including a combined overflow. All internal angles shall be designed so as to facilitate cleaning. Each basin shall have a rim on all sides, except sides in contact with the walls and shall have a skirting at the back.

3.3 Basins shall be provided with single or double tap holes as specified. The tap holes shall be 28 mm square or 30 mm round or 25 mm round for pop up hole. A suitable tap hole button shall be supplied if one tap hole is not required in installation. Each basin shall have circular waste hole to which the interior of basin shall drain. The waste hole shall be either rebated or beveled internally with dia meter of 65 mm at top. Each basin shall be provided with a non-ferrous 32 mm waste fitting. Stud slots to receive the brackets on the underside of the wash basin shall be suitable for a bracket with stud not exceeding 13 mm diameter, 5 mm high and 305 mm from the back of basin to the centre of the stud. The stud slots shall be of depth sufficient to take 5 mm stud. Every basin shall have an integral soap holder recess or recesses, which shall fully drain into the bowl. A slot type of overflow having an area of not less than 5 sq. cm, shall be provided and shall be so designed as to facilitate cleaning of the overflow.

3.4 Where oval shape or round shape wash basins are required to be fixed these shall be fixed preferably in RCC platform with local available stone topping either fully sunk in stone top or top flush with the stone topping as directed by Engineer.

3.5 The wash basins shall be one of the following patterns and sizes as specified below or as specified in the Work item and Drawing (Fig. 37).

(a) Flat back:

- 660 mm x 460 mm (Surgeon's Basin)
- 630 mm × 450 mm
- 550 mm × 400 mm
- 450 mm × 300 mm

(b) Angle back:

- 600 × 480 mm
- 400 × 400 mm

3.6 White glazed pedestals for wash basins, where specified shall be provided. The quality of the glazing of the pedestal shall be exactly the same as that of the basin along with which it is to be installed. It shall be completely recessed at the back to accommodate supply and waste pipes and fittings. It shall be capable of supporting the basin rigidly and adequately and shall be so designed as to make the height from the floor to top of the rim of basin 75 to 80 cm as shown in Fig. 37, 38 & 39. All the waste fittings shall be brass chromium plated, or as specified.

3.7 Installation of Wash Basin (refer Fig. 37, 38, 39 & 40)

3.7.1 The installation shall consist of an assembly of wash basin, pillar taps, C.I. brackets, C.P. brass or P.V.C. union, as specified. The wash basin shall be provided with one or two 15

mm C.P. brass pillar taps, as specified. The height of top of the rim of wash basin from the floor level shall be within 750 mm to 800 mm.

3.7.2 The basin shall be supported on a pair of C.I. cantilever brackets approved by Engineer and be embedded in cement concrete (1:2:4) block 100 mm x 75 mm x 150 mm. Use of M.S. angle or Tee section as bracket is not permitted. Brackets shall be fixed in position before dado work is done. The brackets have been shown in Fig. 38. The wall plaster on the rear shall be cut to rest over the top edge of the basin so as not to leave any gap for water to seep through between wall plaster & skirting of basin. After fixing the basin, plaster shall be made good and surface finished matching with the existing one. S.C.I. floor traps conforming to IS: 1729 having 50 mm water seal (minimum 35 mm in two pipe systems with gully trap) should be used. Waste pipes laid horizontally should have gradient not flatter than 1 in 50 and not steeper than 1 in 10.

3.7.3 Fixing

The waste water from wash basin shall be discharged directly to a floor trap and finally to the vertical stack (Fig. 38) on upper floors and in case of ground floor, the waste water shall be discharged either directly to the gully trap or through the floor trap (Fig. 39). C.P. brass trap and union are not to be used in such situations.

If waste pipe is concealed or crosses the wall as specified in the Work item and Drawing, waste water shall be discharged through non-ferrous trap like PVC Engineering plastic or C.P. brass and union (Fig. 40) to vertical stack. The C.P. brass trap where specified shall be paid for separately. Where so specified a 20 mm G.I. puff pipe terminating with a perforated brass cap screwed on it on the outside of the wall or connected to the anti-syphon stack shall be provided. PVC connection pipe with brass union 300 mm length and 15 mm nominal bore shall be provided and fixed as directed by the Engineer.

3.7.4 Measurements

Wash basins shall be measured in numbers

3.7.5 Rate

The rate shall include the cost of all the materials and labor involved in all the operations described above, including the cost of item of all waste fittings.

3.8 Vitreous China Pedestal for Wash Basin

White glazed pedestals for wash basins, where specified shall be provided. The quality of the glazing of the pedestal shall be exactly the same as that of the basin along with which it is to be installed. It shall be completely recessed at the back to accommodate supply and waste pipes and fittings. It shall be capable of supporting the basin rigidly and adequately and shall be so designed as to make the height from the floor to top of the rim of basin 75 to 80 cm as shown in Fig. 37, 38, 39 & 40.

3.9 Waste Fittings for Wash Basins and Sinks (Fig. 41)

The waste fittings shall be of nickel chromium plated brass with thickness of plating not less than as approved by Engineer which is capable of receiving polish and will not easily scale off. The fitting shall conform in all respect to IS: 2963 and shall be sound, free from laps, blow holes and fittings and other manufacturing defects. External and internal surfaces shall be clean and smooth. They shall be neatly dressed and be truly machined so that the nut smoothly moves on the body.

Waste fitting for wash basins shall be of nominal size of 32 mm. Waste fittings for sinks shall be of nominal size 50 mm.

3.10 PVC Waste Pipe for Wash Basin or Sink

PVC waste pipe (flexible) fixed with the waste fitting shall be suitably bent towards the wall and shall discharge into a floor trap (inserted through the hole of the C.P. brass grating) as per Fig. 39.

3.11 CP Brass Pipe/Valve Fittings

The CP Brass pipe/valve fittings like angle valve etc. shall be provided and fixed of reputed make and as per the specification approved by the Engineer.

4. PLASTIC SEAT AND COVERS FOR WATER CLOSET (refer Fig. 42)

4.1 The seat and cover shall be of thermosetting or thermoplastic conforming to IS: 2548 as specified. Unless otherwise specified these shall be of closed pattern.

4.2 Thermosetting plastic used shall conform to grade 2 or 3 of IS: 1300 when it is phenolic plastic or IS: 3389 when of urea formaldehyde. Thermo plastic materials used may be of Polystyrene conforming to type 2 or 3 of IS: 2267 or of polypropylene, Appendix A of IS: 2548. In public buildings where rough and heavy use of seats and covers are common, plastic seats shall be moulded out of thermosetting materials, phenolic or urea formaldehyde only and the underside of the seat shall be flat with solid moulding.

4.3 The hinging device shall be bronze or brass with nickel chromium plating confirming to IS: 1068 and the seat shall have not less than three rubber or plastic buffers of size 25 mm x 40 mm x 10 mm for closed front seats and not less than four for open front seats, which shall be securely fixed to the underside of the seat unless otherwise specified. The cover shall be fitted with the same number of buffers as provided for the seat.

4.4 Seats shall have a smooth finish and shall be non-absorptive and free from cracks and crevices. They shall be capable of being easily cleaned and shall not be adversely affected by common solvents or household cleanser.

4.5 Strength

The seats shall withstand without permanent distortion of the seat or hinge fittings or damage to any finish, a load of 1150 N for 30 minutes applied in the manner prescribed in IS: 2548.

4.6 Fixing

The seat shall be fixed to the pan by means of two corrosion resistant hinge bolts with a minimum length of shank of 65 mm and threaded to within 25 mm of the flange supplied by the manufacturer along with the seat. Each bolt shall be provided with two suitably shaped washers of rubber or other similar materials for adjusting the level of the seat while fixing it to the pans. In addition, one non- ferrous or stainless steel washer shall be provided with each bolt. The maximum external diameter of the washer fixed on the underside of the pan shall not be greater than 25 mm. Alternative hinging devices as supplied by the manufacturer of the seat can also be used for fixing with the approval of Engineer.

4.7 Measurements

Seat with cover shall be measured in numbers.

4.8 Rate

Rate shall include the cost of all the materials and labor involved in all the operations described above.

5. BOWL TYPE URINALS (refer Fig. 43)

5.1 Urinal basins shall be of flat back or corner wall type lipped in front. These shall be of white vitreous china conforming to IS: 2556 (Part 6). The urinals shall of one piece construction and be provided and fixed of the specified size in the Work item and Drawing. Each urinal shall be provided with not less than two fixing holes of minimum dia 6.5 mm on each side. Each urinal shall have an integral flushing rim of suitable type and inlet or supply horn for connecting the flush pipe. The flushing rim and inlet shall be of the self-draining type. It shall have a weep hole at the flushing inlet of the urinals.

5.2 At the bottom of the urinal an outlet horn for connecting to an outlet pipe shall be provided. The exterior of the outlet horn shall not be glazed and the surface shall be provided with grooves at right angles to the axis of the outlet to facilitate fixing to the outlet pipe. The inside surface of the urinal shall be uniform and smooth throughout to ensure efficient flushing. The bottom of pan shall have sufficient slope from the front towards the outlet such that there is efficient draining.

5.3 Installation of Urinal Lipped, Half Stall (Single or range) [refer Fig. 43]

5.3.1 Urinal installation shall consist of a lipped urinal (Single or range), division plate, an automatic flushing cistern/EFS of approved make as specified, G.I. flush and waste pipe. The capacity of flushing cistern and relevant size of flush pipe for urinals in a range shall be as prescribed in table below.

Waste pipe shall be of 32 mm nominal bore G.I. pipe and shall be paid separately.

5.3.2 Urinals shall be fixed in position by using wooden plugs and screws. It shall be at a height of 65 cm from the standing level to the top of the lip of the urinal, unless otherwise directed by the Engineer. The size of wooden plugs shall be 50 mm × 50 mm at base tapering to 38 mm × 38 mm at top and of length 5.0 cms. These shall be fixed in the wall in cement mortar 1:3 (1 cement: 3 fine sand).

5.3.3 Fixing

After the plug fixed in the wall, the mortar shall be cured till it is set.

No. of Urinals in Range	Capacity of Flushing Cistern	Size of Flush Pipe (Galvanized Iron)	
		Main	Distribution
One	5 Liters	15 mm	15 mm
Two	10 Liters	20 mm	15 mm
Three	10 Liters	25 mm	15 mm
Four	15 Liters	25 mm	15 mm

Each urinal shall be connected to 32 mm dia waste pipe which shall discharge into a floor trap. The connection between the urinal and flush or waste pipe shall be made by means of putty or white lead mixed with chopped hemp.

5.3.4 Measurements

Urinals shall be measured in numbers.

5.3.5 Rate

Rate shall include the cost of all the materials and labor involved in all the operations described above, excluding the cost of item of waste pipe, division plate, and automatic flushing cistern which shall be paid separately.

6. DIVISION PLATE FOR URINALS

6.1 Division plate for urinals of the specified size shall be provided and fixed as per IS: 2556 (Part-6) "Specific requirements of Urinals & Partition Plates."

7. AUTOMATIC FLUSHING CISTERN

7.1 Automatic flushing cistern of 10 liters capacity shall be provided and fixed for urinal installations as per IS: 2326 "Specification for Automatic Flushing Cisterns for Urinals (Other than plastic cisterns)." The above specification of low level flushing cistern installation shall apply except that CP Brass stop cock or Brass full way valve with wheel as specified shall be provided for cistern having a capacity of more than 5 liter. The main & distribution flush pipe shall be fixed to the wall by means of standard pattern holder bat clamp shown in Fig. 44. The CP Brass pipe/valve fittings like angle valve etc. shall be provided and fixed of reputed make and as per the specification approved by the Engineer.

7.2 Painting

The brackets shall be painted, if specified, with two or more coats of paint of approved shade and quality.

7.3 Measurements

Cistern, including all fittings, shall be measured in numbers.

7.4 Rate

The rate shall include the cost of all materials and labor involved in all the operations described above.

8. SAND CAST IRON FLOOR TRAPS FOR BASIN OR SINK

8.1 S.C.I. floor traps conforming to IS: 1729 "Cast Iron /Ductile Iron Drainage Pipes and Pipe Fittings Socket and Spigot Series for Over-ground Non-pressure Pipe Line.," having 50 mm water seal (minimum 35 mm in two pipe systems with gully trap) should be used. The waste water from wash basin shall be discharged directly to a floor trap and finally to the vertical stack (Fig. 38) on upper floors and in case of ground floor, the waste water shall be discharged either directly to the gully trap or through the floor trap (Fig. 39).

8.2 The traps shall be of self-cleansing design and shall have exit of same size as that of waste pipe.

9. MIRROR

9.1 The mirror shall be of superior glass with edges rounded off or beveled, as specified in the Work item and Drawing. It shall be free from flaws, specks or bubbles. The size of the mirror shall be 60 x 45 cm unless specified otherwise and its thickness shall not be less than 5.5 mm. It shall be uniformly silver plated at the back and shall be free from silvering defects. Silvering shall have a protective uniform covering of red lead paint. Where beveled

edge mirrors of 5.5 mm thickness are not available, fancy looking mirrors with PVC beading/border or aluminium beading or stainless steel beading/border based on manufacturer's specifications be provided nothing extra shall be paid on this account.

9.2 Fixing

The mirror shall be mounted on backing with environmentally friendly material other than asbestos cement sheet shall be fixed in position by means of 4 C.P. brass screws and C.P. brass washers, over rubber washers and wooden plugs firmly embedded in walls. C.P. brass clamps with C.P. brass screws may be an alternative method of fixing, where so directed. Unless specified otherwise the longer side shall be fixed horizontally.

9.3 Measurements

Mirror shall be measured in numbers.

9.4 Rate

Rate shall include the cost of all the materials and labor involved in all the operations described above.

10. TOILET PAPER HOLDER

10.1 The toilet paper holder shall be of CP Brass or Vitreous China as specified and of size and design as approved by the Engineer. It shall be fixed in position by means of C.P. brass screws and rawl plugs embedded in the wall.

11. CP BRASS SOAP DISH

11.1 The CP Brass Soap Dish of specified size and design as approved by the Engineer shall be fixed in position by means of C.P. brass screws and rawl plugs embedded in the wall.

12. CP BRASS BIB TAP AND ANGLE/STOP VALVES (refer Fig. 45)

12.1 A bib tap is a draw off tap with a horizontal inlet and free outlet and a stop valve is a valve with suitable means of connections for insertion in a pipe line for controlling or stopping the flow. They shall be of specified size and shall be of screw down type and shall conform to IS: 781. The closing device shall work by means of disc carrying a renewable non-metallic washer which shuts against water pressure on a seating at right angles to the axis of the threaded spindle which operates it.

12.2 The handle shall be either crutch or butterfly type securely fixed to the spindle. Valve shall be of the loose leather seated pattern. The cocks (taps) or full way valve with wheel as specified shall open in anti-clock wise direction.

12.3 The bib tap and stop valve shall be polished bright. The minimum finished weights of bib tap and stop valve shall be as specified in table below.

Minimum Finished Mass of Bib Taps and Stop Valves

Size	Minimum Finished Mass			
	Bib Taps	Stop Valves		
		Internally Threaded	Externally Threaded	Mixed End
(1)	(2)	(3)	(4)	(5)
Mm	kg	Kg	kg	kg
8	0.250	0.220	0.250	0.235
10	0.300	0.300	0.350	0.325
15	0.400	0.330	0.400	0.365
20	0.750	0.675	0.750	0.710
25	1.250	1.180	1.300	1.250
32	-	1.680	1.800	1.750
40	-	2.090	2.250	2.170
50	-	3.700	3.850	3.750

In case these are required to be nickel plated, the plating shall be of the first quality with a good thick deposit of silvery whiteness capable of taking high polish which will not easily tarnish or scale.

Wherever, Brass full way valve with wheel is specified instead of stop cocks, the same shall be provided and fixed of approved specification and as directed by the Engineer.

13. PILLAR TAPS

13.1 Pillar taps shall be Chromium Plated Brass and shall conform to IS: 1795. The nominal sizes of the pillar tap shall be 15 mm or 20 mm as specified. The nominal size shall be designated by the nominal bore of the pipe outlet to which the tap is to be fitted. Finished weights of 15 mm and 20 mm pillar taps shall be as prescribed in table below.

Minimum Finished Weights of Pillar Taps

Particulars	Weights in gms	
	15 mm size	20 mm size
Body	255	505
Washer plate loose valve	15	28
Back nut	40	50
Tap	650	1175

Casting shall be sound and free from laps, blow hole and pitting. External and internal surfaces shall be clean, smooth and free from sand and be neatly dressed. The body, bonnet and other parts shall be machined true so that when assembled, the parts shall be axial, parallel and cylindrical with surfaces smoothly finished.

The area of waterway through the body shall not be less than the area of the circle of diameter equal to the bore of the seating of the tap. The seating of pillar tap shall be integral with the body and edges rounded to avoid cutting of washer. Pillar taps shall be nickel chromium plated and of appropriate thickness of coating as directed by Engineer and plating shall be capable of taking high polish which shall not easily tarnish or scale.

Every pillar tap, complete with its component parts shall withstand an internally applied hydraulic pressure of 20 kg/sq.cm. maintained for a period of 2 minutes during which period it shall neither leak nor sweat.

14. SAND CAST IRON OR CENTRIFUGALLY CAST (SPUN) IRON PIPES AND FITTINGS

14.1 All cast iron fittings (including plain bends, bends of required degree, tees, etc.) shall be sound and free from laps, blow holes and pitting. Both internal and external surfaces shall be clean, smooth and free from sand etc. Burning, plugging, stopping or patching of the casting shall not be permissible. The bodies, bonnets, spindles and other parts shall be truly machined so that when assembled the parts shall be axial, parallel and cylindrical with surfaces smoothly finished. The area of the waterway of the fittings shall not be less than area of the nominal bore, chromium plating wherever specified shall be of 0.3 micron.

14.2 Sand cast iron spigot and socket soil, waste and ventilating pipes, fittings and accessories shall conform to IS: 1729. Centrifugally cast (Spun) iron spigot and socket soil, waste and ventilating pipes, fittings and accessories shall conform to IS: 3989.

14.3 The fittings shall conform to the same I.S. specifications to which the pipe itself conforms in which they are connected.

14.4 The pipes shall have spigot and socket ends, with head on spigot end in case of sand cast iron pipes and without head on spigot end in case of cast iron (Spun) pipes.

14.5 The pipes and fittings shall be true to shape, smooth and cylindrical, their inner and outer surface being as nearly as practicable concentric. They shall be sound and shall be free from cracks, taps, pinholes and other imperfections and shall be neatly dressed and carefully fettled. All pipes and fittings shall ring clearly when struck with a light hand hammer.

14.6 The ends of pipes and fittings shall be reasonably square to their axis. The sand cast iron pipes shall be 1.5/1.8/2.0 meter in length including socket ends, cast iron (Spun) pipes shall be 1.5/1.75/2.0/2.5/3.0 meter in length excluding socket ends, unless shorter lengths are either specified or required at junctions etc. The pipe and fittings shall be supplied without ears, unless specified or directed otherwise.

14.7 All pipes and fittings shall be coated internally and externally with the same material at the factory, the fitting being preheated prior to total immersion in a bath containing a uniformly heated composition having a tar or other suitable base. The coating material shall have good adherence and shall not scale off. In all instances where the coating material has tar or similar base it shall be smooth and tenacious and hard enough not to flow when exposed to a temperature of 77 degree centigrade but not so brittle at a temperature of 0 degree centigrade as to chip off when scribed lightly with a pen knife.

14.8 Standard weights & thicknesses of pipes & their tolerances shall be as prescribed below.

Standard Weights and Thickness of C.I. Pipes

For Sand Cast Iron Pipes (IS: 1729)

Nominal dia of bore (mm)	Thickness (mm)	Over all weight of pipe (Kg)		
		1.5 m long	1.80 m long	2.0 m long
50	5.0	9.56	11.41	12.65
75	5.0	13.83	16.52	18.37
100	5.0	18.14	21.67	24.15
150	5.0	26.70	31.92	35.66

For Cast Iron (Spun Pipes) [IS: 3989]

Nominal dia (mm)	Thickness (mm)	Overall Weight in Kg. for an effective length in meters of				
		3.000	2.500	2.000	1.800	1.500
50	3.5	13.4	11.3	9.2	8.4	7.1
75	3.5	20.0	16.8	13.8	12.5	10.6
100	4.0	30.0	25.5	21.0	18.8	16.0
150	5.0	56.0	47.0	38.5	34.9	29.5

Tolerances

(a) Tolerances on the external diameter of the barrel, the internal diameter of the socket and the depth of socket shall be as follows:

Dimensions (mm)	Nominal Diameter (mm)	Tolerance (mm)
External diameter of barrel	50, 75	± 3.0
	100	± 3.5
	150	± 4.0
Internal diameter of socket	All diameters	± 3.0
Depth of socket	All diameters	10.0

The maximum and minimum jointing space resulting from these tolerances shall be such that the jointing of the pipes and fittings is not adversely affected.

The tolerance on length of pipes shall be ± 20 mm.

(b) The tolerances on dimensions of fittings shall be as given below:

Type of Casting	Dimension	Tolerance (mm)
Bend pipes	a	+25, -10
	b	+20, -10
Branches with equal branch pipes	a	+25, -10
	b	+25, -10
Branches with unequal branch pipes	L	+30, -20
S. Shape casting	L	+50, -10
Taper collars	L	+25, -10
Other	L	+20, -10

Note:

(1) Tolerance on wall-thickness shall be limited to –15 percent. No limits for plus tolerance is specified.

(2) Tolerance for dimensions other than those specified above shall be as specified in IS: 5519.

(3) Tolerance on mass shall be limited to –10 percent. No limit for plus tolerance is specified.

14.9 The thickness of fittings and their socket and spigot dimensions shall conform to the thickness and dimensions specified for the corresponding sizes of straight pipes. The tolerance in weights & thicknesses shall be the same as for straight pipes.

14.10 The access door fittings shall be designed so as to avoid dead spaces in which filth may accumulate. Doors shall be provided with 3 mm rubber insertion packing and when closed and bolted, these shall be water tight.

15. PIPES-GALVANIZED IRON

15.1 The pipes (tubes) shall be galvanized mild steel hot finished seamless (HFS) or welded (ERW) HRIW or HFW screwed and socketed conforming to the requirements of IS: 1239 (Part-1) for medium grade. They shall be of the diameter (nominal bore) specified in the description of the item, the sockets shall be designated by the respective nominal bores of the pipes for which they are intended.

15.2 Galvanizing shall conform to IS: 4736

The zinc coating shall be uniform adherent, reasonably smooth and free from such imperfections as flux, ash and dross inclusions, bare batches, black spots, pimples, lumping runs, rust stains, bulky white deposits and blisters. The pipes and sockets shall be cleanly finished, well galvanized in and out and free from cracks, surface flaws laminations and other defects. All screw threads shall be clean and well cut. The ends shall be cut cleanly and square with the axis of the tube.

15.3 The dimensions & weights of pipes & sockets and tolerances shall be as prescribed below.

Particulars of Medium Grade G.I. Pipes

Nominal Bore (mm)	Dimension of Pipes			Weight of Pipe	
	Outside Diameter		Thickness (mm)	Plain end (kg/m)	Screwed end socket (kg/m)
	Max. (mm)	Min. (mm)			
6	10.6	9.8	2.0	0.404	0.407
8	14.0	13.2	2.3	0.641	0.645
10	17.5	16.7	2.3	0.839	0.845
15	21.8	21.0	2.6	1.21	1.22
20	27.3	26.5	2.6	1.56	1.57
25	34.2	33.3	3.2	2.41	2.43
32	42.9	42.0	3.2	3.10	3.13
40	48.8	47.9	3.2	3.56	3.60
50	60.8	59.7	3.6	5.03	5.10
65	76.6	75.3	3.6	6.42	6.54
80	89.5	88.0	4.0	8.36	8.53
100	115.0	113.1	4.5	12.2	12.50
125	140.8	138.5	4.8	15.90	16.40
150	166.5	163.9	4.8	18.90	19.50

Tolerance in Thickness and Weight

a) Thickness
   1. Butt welded medium tubes : + not limited, – 10 percent
   2. Seamless tubes : + not limited, – 12.5 percent

b) Weight
   1. Single tube (light series) : + 10 percent, – 8 percent
   2. Single tube (medium and heavy series) : ± 10 percent
   3. For quantities per load of 10 T min. (light series) : + 5 percent, – 8 per cent
   4. For quantities per load of 10 T min. (medium and heavy series) : ± 7.5 per cent

15.4 All screwed tubes & sockets shall have pipe threads conforming to the requirements of IS: 554. Screwed tubes shall have taper threads while the sockets shall have parallel threads.

15.5 All tubes shall withstand a test pressure of 50 kg/m^2 without showing defects of any kind.

15.6 Fittings

The fittings shall be of mild steel tubular or wrought steel fittings conforming to IS: 1239 (Part-2) or as specified. The fittings shall be designated by the respective nominal bores of the pipes for which they are intended.

16. VERTICALLY CAST IRON SOCKET AND SPIGOT PIPES CLASS B

16.1 This work item shall be executed as per IS: 1537 "Specification for vertically cast iron pressure pipes for water, gas and Sewage."

17. PIPES – CENTRIFUGALLY CAST (SPUN) IRON PIPES

17.1 The spun iron pipes shall conform to IS: 1536. The spun iron pipes shall be of cast iron cast centrifugally and vary in diameters from 80 mm to 750 mm. These shall be of class LA, class A and class B, as specified. Pipes shall be tested hydrostatically at the pressure specified in tables below.

Hydrostatic Test pressure for centrifugally cast socket & spigot pipes in MPa		
Hydrostatic Test pressure for works in MPa		
Class	Up to DN 600	DN 700 & above
LA	3.5	1.5

Hydrostatic Test pressure for centrifugally cast socket & spigot pipes in MPa		
Hydrostatic Test pressure for works in MPa		
Class	**Up to DN 600**	**DN 700 & above**
A	3.5	2.0
B	3.5	2.5

Hydrostatic Test pressure for centrifugally cast pipes with screwed on flanges in MPa		
Class	**Up to DN 600**	**DN 700 & above**
B	2.5	1.6

Tolerances on specified dimensions shall be as prescribed below.

Tolerances for Cast Iron (Centrifugally Cast) Pipes

Dimensions	Nominal Diameter (DN)	Tolerances in mm
(a) External diameter of barrel (DE)	All diameters	± 1/2f = ± (4.5 + 0.0015 DN)
(b) Internal diameter of socket (DI)	All diameters	± 1/3f = ± (3 ± 0.001 DN)
c) Depth of socket (P)	(1) Up to and including 600 mm	± 5
	(2) Over 600 mm and up to and including 1000 mm	± 10

Note:

(1) f is the caulking space of the joint in millimeters and is equal to 9 + 0.003 DN.

(2) The jointing tolerances applicable to rubber joints (mechanical or push in joints) shall be as specified by their manufacturer and shall be within the tolerances specified above.

Tolerance on Thickness

Dimensions	Tolerance in mm
(a) Wall thickness	– (1 + 0.05 e)
(b) Flange thickness	± (2 + 0.05 b)

Where, e = is the thickness of the wall in mm and b = is the thickness of the flange in mm.

Tolerance on Length

Type of Casting	Tolerance in mm
(a) Socket and spigot, and plain ended pipes	± 25
b) Flanged pipes	± 10

17.2 Specials

The specials shall conform to IS: 1538. The hydraulic test pressure of each class shall be as detailed in table below.

Hydrostatic Test pressure for fittings in MPa (N/mm^2) (meter head)		
Nominal - Diameter	**Fitting without branches or with branches not greater than half the principal diameter**	**Fitting with branches greater than half the principal diameter**
Up to and including 300 mm	2.5 (25)	2.5 (25)
Over 300 mm and up to and including 600 mm	2.0 (20)	2.0 (20)
Over 600 mm and up to and including 1500 mm	1.5 (15)	1.0 (10)

Tolerances on specified dimensions of Specials shall be as prescribed below.

Tolerances in Diameter

Dimension	Nature of Joint	Nominal Diameter (DN)	Tolerance in mm
External diameter of spigot (DE) f or ± (4.5 + 0.0015 DN)	Lead joints	All diameters	±1/2

Dimension	Nature of Joint	Nominal Diameter (DN)	Tolerance in mm
Internal diameter of socket (DI) f or ± (3 + 0.001 DN)	Lead joints	All diameters	±1/3
Depth of socket (P)	Lead joints	Up to and including 600 mm	± 5
		Over 600 mm up to and including 1000 mm	± 10
		Over 1000 mm up to and including 1500 mm	± 15

Tolerances on Thickness

Dimensions	Tolerance in mm
Wall thickness	– (2 + 0.05 e)
Flange thickness	± (3 + 0.05 b)

Where, e = the standard thickness of the wall in millimeters, and

b = the standard thickness of the flange in millimeters.

Tolerance on Lengths

Type of Fitting	Nominal diameter	Tolerance in mm
Socket fittings and flange spigot pieces	Up to and including 450 mm	± 20
	Over 450 mm	+ 20, – 30
Flanged fittings	All diameters	± 10

17.3 Measurements

17.3.1 The net length of pipes as laid or fixed, shall be measured in the running meters correct to a cm. Specials shall be excluded and enumerated and paid for separately. The portion of the pipe within the collar at the joints shall not be included in the length of pipe work.

17.3.2 Excavation, refilling, shoring and timbering in trenches masonry or concrete pillars and thrust blocks, wherever required, shall be measured and paid for separately, under relevant items of work.

17.3.3 Lead caulked joints shall be measured and paid for separately.

18. SAND CAST IRON FLOOR TRAP OR NAHANI TRAP

Sand Cast Iron Floor Trap or Nahani Trap shall be 'P' or 'S' type with minimum 50 mm seal. However, if the plumbing is in two pipe system and with a gully trap at the ground level the minimum water seal shall be 35 mm. The traps shall be of self-cleansing design and shall have exit of same size as that of waste pipe. These shall conform to IS: 1729.

19. FIXING AND JOINTING OF PIPES AND FITTINGS

19.1 The specifications as far as applicable for fixing of and jointing of S.C.I. pipes and fittings shall be as below, with the joint having being lead caulked for soil / waste / vent pipes. All soil pipes shall be carried up above the roof and shall have sand cast iron terminal guard.

19.1.1 Pipes shall be either fixed on face of wall or embedded in masonry, as required in the description of the item.

19.1.2 Plain pipes (without ears) shall be secured to the walls at all joints with M.S. holder bat clamps. The clamps shall be made from 1.6 mm thick galvanized M.S. sheet of 30 mm width, bent to the required shape and size so as to fit tightly on the socket of the pipe, when tightened with screw bolts. It shall be formed out of two semi-circular pieces, hinged with 6 mm dia M.S. bolt on one side and provided with flanged ends on the other side with hole to fit by the screw bolt and nut, 40 mm long. The clamp shall be provided with a hook made out of 27.5 cm long 10 mm diameter M.S. bar, rivetted to the ring at the centre of one semi-circular piece. The clamps shall be fixed to the wall by embedding their hooks in cement concrete block 10 cm x 10 cm x 10 cm in 1:2:4 mix (1 cement : 2 coarse sand : 4 graded stone aggregate 20 mm nominal size) for which necessary holes shall be made in the wall at proper places. The clamps shall be kept about 25 mm clear off finished face of wall, so as to facilitate cleaning and painting of pipes.

Note: Where G.I. sheet clamps are not provided, M.S. sheet clamps of 3 mm thick and 20 mm wide shall be used for making the clamps.

19.1.3 The pipes shall be fixed perfectly vertical or to the lines as directed. The spigot of the upper pipe shall be properly fitted in the socket of the lower pipe such that there is a uniform annular space for filling with the jointing material. For rain water pipes, the annular space between the socket and the spigot shall be filled with a few turns of spun yarn soaked in neat cement slurry. These shall be pressed home by means of caulking tool. More skins of yarn shall be wrapped if necessary and shall be rammed home. The joint shall then be filled with stiff cement mortar 1:2 (1 cement : 2 fine sand) well pressed with caulking tool and finished smooth at top at an angle of 45 degree sloping up. The joints shall be kept wet for not less than 7 days by tying a piece of gunny bag, four fold, to the pipe and keeping it moist constantly.

19.1.4 Where pipes are to be embedded in masonry, these shall be fixed in masonry work as it proceeds. In such cases care shall be taken to keep the pipes absolutely vertical or to the line as directed by the Engineer. The pipe shall have a surrounding of 12 mm minimum thickness of mortar at every portion of the external surface. The mortar shall be of the same mix as is used in the masonry. The joint shall be caulked with lead as soon as the next length of pipe is placed in position. The open end (socket end) of the pipe shall be kept closed till the next length is fitted and jointed, to prevent any brick bats or concrete or pieces of wood falling in and choking the pipe.

The depth of lead from the lip of socket shall be 25 mm minimum. In case of 100 mm dia., 75 mm dia. and 50 mm dia pipes, the quantity of lead required per joint shall be 1.00 kg, 0.66 kg and 0.50 kg respectively for purpose of reckoning theoretical consumption.

In order to ensure that required quantity of lead is poured into the joint and to control wastage of lead, at the beginning, three or four samples shall be made and the quantum of lead per joint approved by the Engineer.

The actual consumption of lead should be within ± 5% of the approved sample job subject to the provision that a variation of ± 20% shall be allowed over the theoretical quantity of lead due to dimensional tolerances allowed as per Indian Standards. This variation includes allowances of wastage also.

19.1.5 The spigot end shall butt the shoulder of the socket and leave no gap in between. The annular space between the socket and the spigot will be first well packed in with spun yarn leaving 25 mm from the lip of the socket for the lead. The joint shall then be lead caulked as described in detail under jointing of S.C.I soil, waste and vent pipes below.

19.2 Height of Ventilating Pipes

The ventilating pipe or shaft shall be carried to a height of at least 60 cms above the outer covering of the roof of the building or in the case of a window in a gable wall or a dormer window it shall be carried up to the ridge of the roof or at least 2 meters above the top of the window. In the case of a flat roof to which access for use is provided it shall be carried up to a height of 2 meters above the roof and shall not terminate within 2 meters, measured vertically from the top of any window opening which may exist up to a horizontal distance of 3 meters from the vent pipe into such building and in no case shall be carried to a height less than 3 meters above plinth level. In case the adjoining building is taller, the ventilating pipe shall be carried higher than the roof of the adjoining building, wherever it is possible.

The pipes above the parapet shall be secured to the wall by means of M.S. stay and clamps as specified in Fig. 44.

The connections between the main pipe and branch pipes shall be made by using branches and bends with access doors for cleaning. The waste from lavatories, kitchen, basins, sinks, baths and other floor traps shall be separately connected to respective waste stack of upper floors. The waste stack of lavatories shall be connected directly to manhole while the waste stack of others shall separately discharge over gully trap. Where single stack system is provided, the connection shall be made direct to the manhole.

The ventilating pipe shall be attached with a hood on top i.e. C.I. Cowl of dimensions as specified in the Work item and drawing.

19.3 Jointing

The interior of the socket and exterior of the spigots shall be thoroughly cleaned and dried. The spigot end shall be inserted into the socket right up to the back of the socket and carefully centered by 2 or 3 laps of treated spun yarn, twisted into ropes of uniform thickness, well caulked into the back of the socket. No piece of yarn shall be shorter than the circumference of the pipe. The jointed pipe line shall be at required levels and alignment.

The leading of pipes shall be made by means of ropes covered with clay or by using special leading rings. The lead shall be melted so as to be thoroughly fluid and each joint shall be filled in one pouring.

The following precautions shall be taken for melting lead:

(a) The pot and the ladle in which lead shall be put shall be clean and dry.

(b) Sufficient quantity of lead shall be melted.

(c) Any scum or dross which may appear on the surface of the lead during melting shall be skimmed off.

(d) Lead shall not be overheated.

After the lead has been run into the joint the lead shall be thoroughly caulked. Caulking of joints shall be done after a convenient length of the pipes has been laid and leaded.

The leading ring shall first be removed and any lead outside the socket shall be removed with a flat chisel and then the joint caulked round three times with caulking tools of increasing thickness and hammer 2 to 3 kg. weight. The joints shall not be covered till the pipe line has been tested under pressure.

Provision and fixing of loose sockets or collars, as specified in the Work item and Drawing shall be made, as directed by Engineer. Use of collars for jointing is not permitted in any concealed or embedded location. However, in exposed locations where full length pipes cannot be fixed due to site constraints, collars (and not loose sockets) may be used subject to the following:

(a) No two consecutive joint shall be with the use of collars.

(b) The joint of collar with the cut/spigot end of the pipe shall be made on the ground in advance and tested against leakage before fixing.

(c) Cut/spigot end of the pipes shall be inserted in the collars up to the projection inside the collar and jointing shall be done as in the case of socket and spigot joint. The jointed pipe line shall be at required level/slope and alignment.

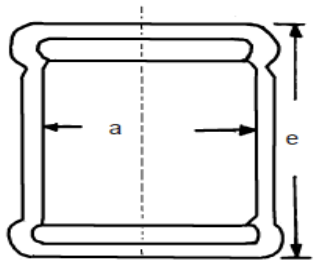

Loose Socket

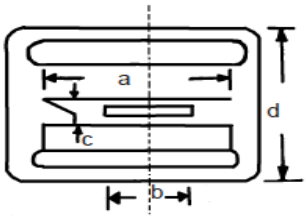

Collar

As marked in Figure above	Pipe diameter (size in mm)			
	50	**75**	**100**	**150**
a	76	101	129	181
b	50	75	100	150
c	10	10	10	10
d	79	89	95	108
e	89	101	114	140

Note: The dimensions of loose sockets shall correspond to those of appropriate nominal size of pipe.

19.4 Testing

In order to ensure that adequate lead is poured properly into the joints and to control waste in use of lead, at the beginning of work three or four sample joints shall be made and the quantum of lead per joint approved by the Engineer. All sand cast iron/cast iron (Spun) pipes and fittings including joint shall be tested by smoke test to the satisfaction of the Engineer and left in working order after completion. The smoke test shall be carried out as under:

Smoke shall be pumped into the pipes at the lowest end from a smoke machine which consists of a bellow and burner. The material usually burnt is greasy cotton waste which gives out a clear pungent smoke which is easily detectable by sight as well as by smell, if there is leak at any point of the drain.

19.5 Painting

All sand cast iron/cast iron (Spun) pipes and fittings shall be painted with shade to match the color of the background as directed by the Engineer.

19.6 Measurements

19.6.1 The pipes shall be measured net when fixed in position excluding all fittings along its length, correct to a cm.

19.6.2 When collars are used for jointing SCI pipes these shall be measured as fittings and shall be paid for separately.

19.6.3 No allowance shall be made for the portions of the pipe lengths entering the sockets of the adjacent pipes or fittings. The above shall apply to both cases i.e. whether the pipes are fixed on wall face or embedded in masonry.

19.6.4 No deduction shall be made in the former case from the masonry measurement for the volume of concrete blocks embedded therein. Similarly no deduction shall be made for the volume occupied by the pipes from the masonry when the former are embedded in the later.

19.7 Rate

The rate shall include the cost of all labor and materials involved in all the operations described above, excluding cost of lead caulk jointing and loose sockets.

20. LEAD CAULKED JOINTS WITH PIG LEAD

20.1 This type of lead caulking is generally done in providing joints in gas water and sewer lines wherever it is practicable to use cast lead caulking, but not in case of wet conditions.

20.2 The approximate depth and weights of pig lead for various diameters of C.I. pipes and specials shall be as given in table below.

Lead for Different Sizes of Pipes

Nominal size of pipe (mm)	Lead per joint (kg.)	Depth of lead joint (mm)
(1)	(2)	(3)
80	1.8	45
100	2.2	45
125	2.6	45
150	3.4	50
200	5.0	50
250	6.1	50
300	7.2	55
350	8.4	55
400	9.5	55
450	14.0	55
500	15.0	60
600	19.0	60
700	22.0	60
750	25.0	60

Note:

1. The quantity of lead given in the above table is on average basis and a variation of 10 % is permissible.
2. Before pipes are jointed on large scale, three or four sample joints shall be made and the average consumption of lead per joint shall be got approved by the Engineer.

Only required quantity of spun yarn shall be put so as to give the specified depth of lead in the joint.

20.3 Pig lead shall be of uniform quality, clean and free from foreign materials. It shall be of uniform softness and capable of being easily caulked or driven. It shall conform to IS 782 for caulking lead in all respects.

20.4 Measurements

While the overall lead caulked joint item with pig lead is enumerated for payment, the supply of pig lead as one part of the Work item is measured and checked in kilogram for testing of lead caulked joints.

20.5 Rate

The rate shall include the cost of all labor and materials involved in all the operations described above.

21. LOOSE SOCKETS / COLLARS

Refer specifications under sub-section 19 above for plumbing and sanitation fittings for jointing of loose socket / collar fittings.

22. STONEWARE GULLY TRAP (refer Fig. 46)

22.1 Gully traps shall conform to IS: 651. These shall be sound, free from visible defects such as fire cracks, or hair cracks. The glaze of the traps shall be free form crazing. They shall give a sharp clear tone when struck with light hammer. There shall be no broken blisters.

Each gully trap shall have one C.I. grating of square size corresponding to the dimensions of inlet of gully trap. It will also have a water tight C.I. cover with frame inside dimensions 300x300 mm the cover weighing not less than 4.5 Kg and the frame not less than 2.7 Kg. The grating, cover and frame shall be of sound and good casting and shall have truly square machined seating faces.

22.2 Fixing

(i) Excavation: The excavation for gully traps shall be done true to dimensions and levels as indicated on plans or as directed by the Engineer.

(ii) Fixing: The gully traps shall be fixed on cement concrete foundation 65 cm square and not less than 10 cm thick. The mix for the concrete will be 1:5:10 (1 cement : 5 fine sand: 10 graded stone aggregate 40 mm nominal size). The jointing of gully outlet to the branch drain shall be done similar to jointing of S.W. pipes described above.

(iii) Brick Masonry Chamber : After fixing and testing gully and branch drain, a brick masonry chamber 300 x 300 mm (inside) in brick work of specified class in cement mortar 1:4 (1 cement : 4 fine sand) shall be built with a half brick thick brick work round the gully trap from the top of the bed concrete up to ground level. The space between the chamber walls and the trap shall be filled in with cement concrete 1:5:10 (1 cement : 5 fine sand : 10 graded stone aggregate 40 mm nominal size). The upper portion of the chamber i.e. above the top level of the trap shall be plastered inside with cement mortar 1:3 (1 cement: 3 coarse sand), finished with a floating coat of neat cement. The corners and bottom of the chamber shall be rounded off so as to slope towards the grating.

C.I. cover with frame 300×300 mm (inside) shall then be fixed on the top of the brick masonry with cement concrete 1:2:4 (1 cement : 2 coarse sand : 4 graded stone aggregate 20 mm nominal size) and rendered smooth. The finished top of cover shall be left about 4 cm above the adjoining ground level so as to exclude the surface water from entering the gully trap.

22.3 Measurements

The work shall be enumerated. Excavation shall be measured separately under relevant item of earth work.

22.4 Rate

The rate shall include the cost of materials and labor involved in all the operations described above, except earth work which shall be paid for separately.

23. MANHOLES (refer Fig. 47 & 48)

23.1 In pipes & sewer line, manholes and inspection chambers shall be enumerated stating the size and depth of manhole/inspection chamber. They shall be classified into different groups depending upon the depth, in unit of half and one meter depth. The depth of the manhole shall be the distance between the top of manhole cover and invert level of the drain.

At every change of alignment, gradient or diameter of a drain, there shall be a manhole or inspection chamber. Bends and junctions in the drains shall be grouped together in manhole as far as possible.

The maximum distance between manholes shall be 30 m.

Manholes of different types and sizes as specified shall be constructed in the sewer line at such places and to such levels and dimensions as shown in the drawings or as directed by

the Engineer. The size specified in the Work item and Drawing shall indicate the inside dimensions between brick faces of the manholes. Where the diameter of the drain is increased, the crown of the pipe shall be fixed at the same level and necessary slope given in the invert of the manhole chamber. In exceptional cases and where unavoidable, the crown of the branch sewer may be fixed at lower level but in such cases the peak flow level of the two sewers shall be kept the same.

Sewers of unequal sectional area shall not be jointed at the same invert in a manhole. The invert of the smaller sewer at its junction with main shall be at least 2/3 the diameter of the main above the invert of the main. The branch sewers shall deliver sewage in the manhole in the direction of main flow and the junction must be made with care so that flow in main is not impeded.

No drain from house fittings, e.g. gully trap or soil pipe, etc. to manhole shall normally exceed a length of 6 m unless it is unavoidable.

Manholes 90×80 cm are generally constructed within compound for house drainage only and near the buildings for house drainage. Manholes 1.20 m × 0.90 m are generally constructed for main drainage work for depths less than 1.5 m.

Manhole 1.4×0.9 m is of the arched type and is generally constructed for main drainage works where depth is 1.50 m or more. The width of manholes shall be increased more than 90 cm on bends or junctions or pipes with diameter greater than 450 mm and that the benching width on either side of the channel is minimum 20 cm.

Manholes 1.4 m internal diameter are generally constructed for main drainage works where depth is 2.45 m or more as an alternative to manholes of arch type. The diameter shall be increased suitably, for pipes with diameter greater than 450 mm in the same manner as in the case of rectangular manholes.

Before deciding size of manholes, Local Municipal Bye Laws shall be consulted. When manholes are constructed on foot path, these shall be provided with cover of medium duty casting and when built within the width of the road under vehicular traffic, these shall be provided with cover of heavy duty casting.

23.2 Excavation

The excavation for manhole shall be true to dimensions and levels shown on the Drawing plans or as directed by the Engineer.

23.3 Bed Concrete

The manhole shall be built on a bed of cement concrete 1:4:8 (1 cement: 4 coarse sand: 8 graded stone aggregate 40 mm nominal size) unless required by local authorities. The thickness of the bed concrete shall be 20 cm for manholes up to 4.25 m depth and 30 cm for depths beyond 4.25 m unless otherwise specified or directed by the Engineer. In bad ground, special foundations as suitable shall be provided.

23.4 Brick Work

The brick work shall be with First Class Bricks in cement mortar 1:3 (1 cement : 3 coarse sand). The external joints of the brick masonry shall be finished smooth, and the joints of the pipes with the masonry shall be made perfectly leak proof. For arched type and circular manholes, brick masonry in arches and arching over the pipes shall be in cement mortar 1.3 (1 cement : 3 fine sand). In the case of manholes of circular type the excess shaft shall be corbelled inwardly on three sides at the top to reduce its size to the cover frame to be fitted.

The walls shall be built of one brick thickness for depths up to 4.25 m. Below a depth of 4.25 m in ordinary subsoil the wall thickness shall be increased to one and half brick and at 9.75 m below ground two brick thick walls shall be built.

23.5 Plaster and Pointing

The walls of the manholes shall be plastered inside with 15 mm thick cement plaster 1:3 (1 cement : 3 coarse sand) finished smooth. In the case of arched type manhole the walls of the manhole shall be plastered inside all-around only up to the crown level, and flush pointed for the shaft with cement mortar 1:2 (1 cement: 2 fine sand). Where the saturated soil is met with, also the external surface of the walls of the manhole shall be plastered with 12 mm thick cement plaster 1:3 (1 cement: 3 coarse sand) finished smooth up to 30 cm above the highest sub-soil water level with the approval of the Engineer.

The plaster shall further be water proofed with addition of approved water proofing compound in a quantity as per manufacturer's specifications. In case Local Authorities/Bye Laws specify richer specifications, the same shall be adopted.

For earth work in excavation, bed concrete, brick work, plaster and pointing, R.C.C. work and refilling of earth, respective specifications as covered under this Section 6 shall be followed.

23.6 Benching

The channels and benching shall be done in cement concrete 1:2:4 (1 cement: 2 coarse sand: 4 graded stone aggregate 20 mm nominal size) and rendered smooth with neat cement. The depth of channels and benching shall be as given in table below.

Sizes of drain (mm)	Top of channel at the centre above bed concrete (cm)	Depth of benching at side walls above bed concrete (cm)
100	15	20
150	20	30
200	25	35
250	30	40
300	35	45
350	40	50
400	45	55
450	50	60

23.7 Foot Rests (refer Fig. 48)

All manholes deeper than 0.8 m shall be provided with M.S. foot rests. These shall be embedded 20 cm deep in 20 cm x 20 cm x 10 cm blocks of cement concrete 1:3:6 (1 cement : 3 coarse sand 6 graded stone aggregate 20 mm nominal size). The concrete block with M.S. foot rest placed in its centre shall be cast in situ along with the masonry and surface finished with 12 mm thick cement plaster 1:3 (1 cement : 3 coarse sand) finished smooth.

Foot rests which shall be of 20 mm × 20 mm Square M.S. bars as shown in Fig. 48 shall be fixed 40 cm apart vertically and staggered laterally and shall project 10 cm beyond the surface of the wall. The top foot rest shall be 45 cm below the manhole cover.

Foot rests shall be painted with coal tar, the portion embedded in the cement concrete block being painted with thick cement slurry before fixing.

23.8 Manhole Covers and Frames

The frame of manhole shall be firmly embedded to correct alignment and levels in R.C.C. slab in 1:2:4 concrete mix on the top of the masonry. After completion of the work, manhole covers shall be sealed by means of thick grease.

23.8.1 Manhole Covers

The covers and frames shall conform to IS: 1726 for Cast Iron and IS: 12592 for pre-cast concrete covers and shall be of the following grades and types:

Grades	Grade Designation	Type/Shape of Cover
Light Duty	LD - 2.5	Rectangular, Square, Circular
Medium Duty	MD - 10	Rectangular, Circular and Square (for pre-cast concrete manhole covers)
Heavy Duty	HD - 20	Circular-Square, Rectangular, (Scrapper Manhole)
Extra Heavy Duty	EHD - 35	Circular, Square, Rectangular, (Scrapper Manhole)

23.8.2 Cast Iron Manhole Covers and Frames

(i) Manhole covers and frame shall be manufactured from appropriate grade of grey cast iron not inferior than FG150 grade of IS: 210.

(ii) They shall be cleanly cast and shall be free from air and sand holes, cold shuts and warping.

(iii) Covers shall have on its operative top a raised chequered design to provide for an adequate no-slip grip. The rise of chequers shall be not less than 4mm.

(iv) Key holes, keys and lifting devices shall be provided in the manhole covered to facilitate their placement in the frames and their operative maintenance.

(v) Manhole covers and frames shall be coated with materials having base with a black bituminous composition. The coating shall be smooth and tenacious. It shall not flow when exposed to temperature of 63 °C and shall not be so brittle as to chip off at temperature of 0 °C.

(vi) Size and shape and performance requirement of manhole covers and frames shall conform to IS: 1726.

(vii) Each manhole covers and frame shall have cast on them the following information:

(a) Manufacturer's Name or Trade-mark

(b) Grade Designation

(c) Date of Manufacturing

(d) The words SWD or 'Sewer' to denote 'storm water drain' or 'sewer' respectively.

(e) Identification marks as required by Engineer.

(viii) The cover shall be gas tight and water tight.

(ix) The sizes of covers specified shall be taken as the clear internal dimensions of the frame.

(x) The approximate weight of the various type of manhole covers and frames shall be as per IS: 1726.

(xi) The cover shall be capable of easy opening and closing and it shall be fitted in the frame in workmanship like manner.

23.9 Measurements

Manholes shall be enumerated under relevant items. The depth of the manhole shall be reckoned from the top level of C.I. cover to the invert level of channel. The depth shall be measured correct to a cm. The extra depth shall be measured and paid as extra over the specified depth.

23.10 Rate

The rate shall include the cost of materials and labor involved in all the operations described above but excludes the cost of (i) excavation, (ii) M.S. foot rests and (iii) 12 mm thick cement plaster with water proofing material applied at the external surface of the manhole if required. These items shall be paid for separately under relevant items of work, as executed.

Payment for extra depths of manholes shall be made separately under relevant items of work.

23.11 Drop Connection

In cases where branch pipe sewer enters the manhole of main pipe sewer at a higher level than the main sewer, a drop connection shall be provided. The work shall be carried out as per Fig. 48.

S.C.I. pipes and special conforming to IS: 1729 shall be of the same size as that of the branch pipe sewer.

For 150 and 250 mm main line, if the difference in level between the water line (peak flow level) and the invert level of the branch line is less than 60 cm, a drop connection may be provided with in the manhole by giving suitable ramp. If the difference in level is more than 60 cm, the drop shall be provided externally.

The main lines up to 350 mm dia, are designed for half depth of flow, from 350 mm to 900 mm for 2/3 depth of flow and beyond 900 mm for 3/4 depth of flow.

23.11.1 Excavation

The excavation shall be done for the drop connection at the place where the branch line meets the manhole. The excavation shall be carried up to the bed concrete of the manhole and to the full width of the branch line.

23.11.2 Laying

At the end of branch sewer line S.C.I. cross shall be fixed to the line which shall be extended through the wall of the manhole by a horizontal piece of S.C.I. pipe to form an inspection or cleaning eye. The open end shall be provided with chain and lid. The S.C.I. drop pipe shall be connected to the cross at the top and to the S.C.I. bend at the bottom. The bend shall be extended through the wall of the manhole by a piece of C.I. pipe which shall discharge into the channel. Necessary channel shall be made with cement concrete 1:2:4 (1 cement: 2 coarse sand: 4 graded stone aggregate 20 mm nominal size) and

finished smooth to connect the main channel. The joint between S.C.I. pipe and fittings shall be lead caulked as described in under sub-section 20 above for plumbing and sanitation fittings. The joint between S.C.I. cross and S.W. branch line shall be made with cement mortar 1:1 (1 cement: 1 fine sand). The exposed portion of the drop connection shall be encased all-around with minimum 15 cm thick concrete 1:5:10 (1 cement: 5 fine sand: 10 graded stone aggregate 40 mm nominal size) and cured. For encasing the concrete around the drop connection, the necessary centring and shuttering shall be provided. The holes made in the walls of the manhole shall be made good with brick work in cement mortar 1:4 (1 cement: 4 coarse sand) and plastered with cement mortar 1:3 (1 cement: 3 coarse sand) on the inside of the manhole wall. The excavated earth shall be back filled in the trench in level with the original ground level.

23.11.3 Measurements

Drop connection shall be enumerated. The depths beyond 60 cm shall be measured in running meters correct to a cm under relevant items.

23.11.4 Rate

The rate shall include the cost of labor and materials involved in all the operations described above but excluding the cost of excavations and refilling.

24. SEPTIC TANK AND SOAK PIT (refer Fig. 49, 50 & 51)

24.1 Septic Tank

In un-sewered area, every house or any public building shall have arrangements for its sewage being treated in septic tank, effluent from which should be given secondary treatment either in a biological filter or on the land, or in a sub-surface disposal system.

Surface and sub-soil water should be excluded from finding way into the septic tank. Waste water may be passed into the septic tank provided the tank and the means for effluent disposal are designed to cope up with this extra liquid. Depending on the location of the water table and the nature of the strata, the type of disposal for the effluent from the septic tank shall be decided.

24.1.1 Dimensions

Septic tanks shall have minimum width of 75 cm, minimum depth of one metre below water level and a minimum liquid capacity of the one cubic metre. Length of tanks shall be 2 to 4 times the width.

Suitable sizes of septic tanks for use of 5, 10, 15, 20 and 50 persons based on certain assumptions are given below.

RECOMMENDED SIZES OF SEPTIC TANKS

Recommended Sizes of Septic Tanks for 5 – 20 Users

No. of users	Length (m)	Breadth (m)	Liquid depth (Cleaning interval of)	
			1 year (m)	2 year (m)
05	1.50	0.75	1.00	1.05
10	2.00	0.90	1.00	1.40
15	2.00	0.90	1.30	2.00
20	2.30	1.10	1.30	1.80

Note:

1) The capacities are recommended on the assumption that discharges from only WC will be treated in the septic tank.
2) A provision of 300 mm should be made for free board.
3) The sizes of septic tanks are based on certain assumptions, while choosing the size of septic tank exact calculation shall be made.

Recommended Sizes of Septic Tanks for Residential Colonies

No. of users	Length (m)	Breadth (m)	Liquid depth (Cleaning interval of)	
			1 year (m)	2 year (m)
050	05.0	2.00	1.00	1.24
100	07.5	2.65	1.00	1.24
150	10.0	3.00	1.00	1.24
200	12.0	3.30	1.00	1.24
300	15.0	4.00	1.00	1.24

Note:

1) A provision of 300 mm should be made for free board.
2) The sizes of the septic tank are based on certain assumptions while choosing the size of septic tank, exact calculation shall be made.
3) For population over 100, the tank may be divided into independent parallel chambers for ease of maintenance and cleaning.

Recommended Sizes of Septic Tanks for Hostel and Boarding Schools

No. of users	Length (m)	Breadth (m)	Liquid depth (D) for stated Intervals of sludge withdrawal	
			Once in a year (m)	Once in 2 years (m)
050	5.0	1.6	1.3	1.4
100	5.7	2.1	1.4	1.7
150	7.7	2.4	1.4	1.7
200	8.9	2.7	1.4	1.7
300	10.7	3.3	1.4	1.7

Note:

1) A provision of 300 mm should be made for free board.
2) The sizes of the septic tank are based on certain assumptions while choosing the size of septic tank exact calculation shall be made.
3) For population over 100, the tank may be divided into independent parallel chambers for ease of maintenance and cleaning.

24.1.2 Cover and Frame

Every septic tank shall be provided with C.I. cover of adequate strength. The cover and frames shall be 500 mm dia. (MD) minimum or 610 mm × 455 mm (LD). The specification for frames and cover given in sub-section 23.8 above shall apply.

24.1.3 Ventilating Pipe

Every septic tank shall be provided with C.I. ventilating pipe of at least 50 mm diameter. The top of the pipe shall be provided with a suitable cage of mosquito proof wire mesh.

The ventilating pipe shall extend to a height which would cause no smell nuisance to any building in the area. Generally the ventilating pipe may extend to a height of about 2 m, when the septic tank is at least 15 m away from the nearest building and to a height of 2 m above the top of the building when it is located closer than 15 meters. The ventilating pipe may also be connected to the normal soil ventilating system of the building where so desired.

24.1.4 Disposal of Sludge

The sludge from septic tanks may be delivered into covered pit or into a suitable vehicle for removal from the site. Spreading of sludge on the ground in the vicinity shall not be allowed.

24.1.5 Testing

Before the tank is commissioned for use, it shall be tested for water-tightness by filling it with water and allowing it to stand for 24 hours. It shall then be topped up, if necessary, and allowed to stand for a further period of 24 hours during which time the fall in the level of the water shall not be more than 1.5 cm.

24.1.6 Commissioning of Septic Tank

The tank shall be filled with water to its outlet level before the sewage is let into the tank. It shall, preferably, be seeded with small quantities of well digested sludge obtained from septic tanks or sludge digestion tanks. In the absence of digested sludge a small quantity of decaying organic matter, such as digested cow-dung, may be introduced.

24.1.7 Sub-Surface Absorption System

The effluent from septic tank shall be disposed of by soak pit or dispersion trench depending on the position of the sub-soil water level, soil and sub-soil conditions and the size of the installation.

24.1.8 Measurements

Septic tank shall be enumerated when executed as a separate item, else should be measured under the respective work sub-heads and BOQ items.

24.1.9 Rate

The rate shall include the cost of materials and labor involved in all the operation, except Sub-Surface Absorption System which shall be paid for separately.

24.2 Soak Pits - 2.5 m Diameter x 3 m Deep (refer Fig. 51)

24.2.1 Construction

The earth excavation shall be carried out to the exact dimensions as shown in the figure. In the soak pit shall be constructed a honey-comb dry brick shaft 45 cm x 45 cm and 292.5 cm high. Round the shaft and within the radius of 60 cm shall be placed well burnt brick bats. Brick ballast of size from 50 mm to 80 mm nominal size shall be packed round the brick bats up to the radius of 90 cm. The remaining portion shall be filled with brick ballast of 40 mm nominal size. The construction of shaft and filling of the bats and the ballast shall progress simultaneously.

24.2.2 Cover and Drain

Over the filling shall be placed single matting which shall be covered with minimum layer of 7.5 cm earth. The shaft shall be covered with 7.5 cm thick stone or R.C.C. slab 10 cm wide and 10 cm deep brick edging with bricks of class designation 75 shall be provided round the pit. The connection of the open surface drain to the soak pit shall be made by means of 100 mm diameter S.W. pipe with open joints.

24.2.3 Measurements

Soak pit shall be enumerated when executed as a separate item, else should be measured under the respective work sub-heads and BOQ items.

24.2.4 Rate

Rate shall include the cost of labor and material involved in all the operations described above.

24.3 Soak Pit – 1.2 m x 1.2 m x 1.2 m

24.3.1 Construction

The earth excavation shall conform to the general specifications for earth work. After the excavation is complete the soak pit shall be filled with brick bats. The brick bats shall be from properly burnt bricks. 10 cm wide and 10 cm deep brick edging with bricks of class designation 75 shall be provided round the soak pit.

24.3.2 Measurements

Soak pits shall be enumerated when executed as a separate item, else should be measured under the respective work sub-heads and BOQ items.

24.3.3 Rate

Rate shall include the cost of labor and materials involved in all the operations.

Electrical Installation Specifications

***[Note:** For Electrical Installations, CPWD General Specifications for Electrical Works, Part-1 Internal, 2005 is being adopted. While these Specifications serve as general guidelines, appropriate technical sanctioning / work executing authority can depart from such guidelines to meet the particular requirements of any work or for other technical reasons. All Electrical Works shall be carried out in accordance with the provisions of Indian Electricity Act, 1910 and Indian Electricity Rules, 1956 amended up to date (date of submission of bid unless specified otherwise).]*

1. WIRING, WIRING ACCESSORIES, FITTINGS, AND CONDUITS

System of distribution and wiring shall be as follows:

i) The wiring shall be done from a distribution system through main and/or branch distribution boards. The system design and location of boards will be properly worked out.

ii) Each main distribution board and branch distribution board shall be controlled by an incoming circuit breaker/linked switch with fuse. Each outgoing circuit shall be controlled by a circuit breaker/switch with fuse.

iii) For non-residential building, as far as possible, DBs shall be separate for light and power.

iv) Only MCCB/MCB/HRC fuse type DBs shall be used. Rewirable type uses shall not be used.

v) Three phase DBs shall the used for final circlets distribution as far as possible.

vi) 'Power' wiring shall be kept separate and distinct from light wiring, from the level of circuits, i.e. beyond the branch distribution boards. Conduits for light/power wiring shall be separate.

vii) Essential/non-essential/UPS distribution each will have a completely independent and separate distribution system starting from the main, switchboard upto final wiring for each system. As for example, conduit carrying non-essential wiring shall not have essential or UPS wiring. Wiring for essential and UPS supply will have their own conduit system. No mixing of wiring is allowed.

viii) Generally, no switchboard will have more than one source of incoming supply. More than one incoming supply will be allowed only at main board with proper safety and interlocking so that only one source can be switched on at a time.

ix) Each MDB/DB/Switch Board will have reasonable spare outgoing ways for future expansion.

x) Balancing of 3-phase circuit shall be done.

1.1 Sub-main & Circuit Wiring

a) Sub-main Wiring

Sub-main wiring shall mean the wiring from one main/distribution switchboard to another.

b) Circuit Wiring

Circuits wiring shall mean the wiring from the distribution board to the 1st tapping point inside the switch box, from where point wiring starts.

1.1.1 Measurement of sub-main and circuit wiring

i) Circuit and sub-main wiring shall be measured on linear basis along the run of the wiring. The measurement shall include all lengths from end to end of conduit or channel as the case may be, exclusive of interconnections inside the switchboard etc. The increase on account of diversion or slackness shall not be included in the measurement.

ii) The length of circuit wiring with two wires shall be measured from the distribution board to the nearest switch box from which the point wiring starts. Looping of switch boxes also will be counted towards circuit wiring, measured along the length of conduit/channel.

iii) When wires of different circuits are grouped in a single conduit/ channel, the same shall be measured on linear basis depending on the actual number and sizes of wires run.

iv) Protective (loop earthing) conductors, which are run along the circuit wiring and the sub-main wiring, shall be measured on linear basis and paid for separately.

v) Note: Conduit carrying sub-main will not carry circuit/point wiring. Similarly conduit carrying circuit wiring will not carry sub-main/point wiring. Conduit carrying point wiring will not carry sub-main/circuit wiring.

1.1.2 Measurement of other wiring work

Except as specified above for point wiring, circuit wiring and sub-main wiring, other types of wiring shall be measured separately on linear basis along the run of wiring depending on the actual number and sizes of wires run.

1.2 Point Wiring

1.2.1 Definition

A point (other than socket outlet point) shall include all work necessary in complete wiring to the following outlets from the controlling switch or MCB:

a) Ceiling rose or connector (in the case of points for ceiling/exhaust fan points, prewired light fittings, and call bells).

b) Ceiling rose (in case of pendants except stiff pendants).

c) Back plate (in the case of stiff pendants).

d) Lamp holder (in the case of goose neck type wall brackets, batten holders and fittings which are not prewired).

1.2.2 Scope

Following shall be deemed to be included in point wiring:

a) Conduit/channel as the case may be, accessories for the same and wiring cables between the switch box and the point outlet, loop protective earthing of each fan/light fixture.

b) All fixing accessories such clips, screws, Phil plug, rawl plug etc. as required.

c) Metal or PVC switch boxes for control switches, regulators, sockets etc., recessed or surface type, and phenolic laminated sheet covers over the same.

d) Outlet boxes, junction boxes, pull-through boxes etc. but excluding metal boxes if any, provided with switchboards for loose wires /conduit terminations.

e) Any special block required for neatly housing the connector in batten wiring system.

f) Control switch or MCB, as specified.

g) 3 pin or 6 pin socket, ceiling rose or connector as required. (2 pin and 5 pin socket outlet shall not be permitted).

h) Connections to ceiling rose, connector, socket outlet, lamp holder, switch etc.

i) Bushed conduit or porcelain tubing where wiring cables pass through wall etc.

1.2.3 Measurement

a) Point wiring (other than socket outlet points)

i) Unless and otherwise specified, there shall be no linear measurement for point wiring for light points, fan points, exhaust fan points and call bell points. These shall be measured on unit basis by counting, and classified as laid down in 1.2.4.

1.2.4 Classification

Points measured under 1.2.3 on unit basis shall be classified as under according to the type of building:

a) Residential buildings

i) Group 'A' for point wiring for Type I, Type II, and Type III residential quarters and hostels.

ii) Group 'B' for point wiring for Type IV and above type of residential quarters and barracks.

b) Non-residential buildings

Group 'C' for all types of non-residential buildings such as offices, hospitals, laboratories, educational institutions, libraries etc.

c) For any other type of building

The group under which the points are to be classified shall be decided by the concerned Chief Engineer (Elect.).

1.2.5 Point wiring for socket outlet points

i) The light (6A) point and power (16A) point wiring shall be measured on linear basis, from the respective tapping point of live cable, namely, switch box, another socket outlet point, or the sub distribution board as the case may be, up to the socket outlet.

ii) The metal/PVC box with cover, switch/MCB, socket outlet and other accessories shall be measured and paid as a separate item.

Note: There shall normally be no "on the board" light plug point.

iii) The power pint outlet may be 16A/6A six pin socket outlet, where so specified in the bid documents.

1.2.6 Group Control point wiring

i) In the case of points with more than one point controlled by the same switch, such points shall be measured in parts i.e. (a) from the switch to the first point outlet as one point and classified according to 1.2.4, and (b) for the subsequent points, the distance from that outlet to the next one and so on, shall be treated as separate point(s) and classified according to 1.2.4.

ii) No recovery shall be made for non-provision of more than one switch in such cases.

1.2.7 Twin Control light point wiring

i) A light point controlled by two numbers of two way switches shall be measured as two points from the fitting to the switches on either side and classified according to 1.2.4.

ii) No recovery shall be made for non-provision of more than one ceiling rose or connector in such cases.

1.2.8 Multiple control call bell point wiring

i) In the case of call bell points with a single call bell outlet, controlled from more than one place the points, shall be measured in parts i.e. (a) from the call bell outlet to one of the nearest ceiling roses meant for connection to bell push, treated as one point and classified according to 1.2.4, and (b) from that ceiling rose to the next one and so on, shall be treated as separate point(s) and classified according to 1.2.4.

ii) No recovery shall be made for non-provision of more than one ceiling rose or connector for connection to call bell in such cases.

1.3 Wiring System

i) Wiring shall be done only by the looping system. Phase/live conductors shall be looped at the switch box. For point wiring, neutral wire/earth wire looping for the 1st point shall be done in the switch box; and neutral/earth looping of subsequent points will be made from point outlets.

ii) In wiring, no joints in wiring will be permitted anywhere, except in switch box or point outlets, where jointing of wires will be allowed with use of suitable connector.

iii) The wiring throughout the installation shall be such that there is no break in the neutral wire except in the form of linked switchgear.

iv) Color coding

Following color coding shall be followed in wiring:

Category		Color Code
Phase	:	Red/Yellow/Blue (Three phase wiring)
Live	:	Red (Single phase wiring)
Neutral	:	Black
Earth	:	Yellow/Green

v) Termination of circuit into switchboard:

Circuit will consist of phase/neutral/earth wire. Circuit will terminate in a switch board (first tapping point, where from point wiring starts) in following manner:

- Phase wire terminated in phase connector.
- Neutral wire terminated in neutral connector.
- Earth wire terminated in earth connector.
- The switchboard will have phase neutral and earth terminal connector blocks to receive phase/neutral/earth wire. See Fig. 52.

1.4 Run of Wiring

i) The type of writing shall be as specified in the bid documents namely, surface conduit/ recessed conduits, steel/ PVC, channel.

ii) Surface wiring shall run as far as possible along with the walls and ceiling, so as to be easily accessible for inspection.

iii) Above false ceiling, in no case, open writing shall be allowed. Writing will be done in recessed conduit or surface steel conduits.

iv) In recessed conduit system, routes of conduit will be planned, so that various inspection boxes provided and present a shabby look. Such boxes can be provided 5 mm above plaster level, and they can be covered with Plaster of Paris with marking of junction boxes.

v) Where number of electrical services like electrical wiring, telephone wiring, computer cabling, pass though corridors, it may be proper to plan such service with properly designed aluminum/PVC channels duly covered by a false ceiling, so that subsequently such service can be maintained and additional cables can be provided.

vi) Generally conduits for wiring will not be taken in floor slabs. When it is unavoidable special precaution to be taken to provide floor channels with provision for safety and maintenance. Alternatively false flooring can be provided.

1.5 Passing through walls and floors

i) When wiring cables are to pass through a wall, these shall be taken through a protection (steel/PVC) pipe or porcelain tube of suitable size such that they pass though in straight line without twist or cross in them on either end of such holes. The ends of metallic pipe shall be neatly bushed with porcelain, PVC or other approved material.

ii) All floor openings, for carrying any wiring shall be suitably sealed after installation.

1.6 Joints in wiring

i) No bare conductor in phase and/or neutral or twisted joints in phase, neutral, and/or protective conductors in wiring shall be permitted.

ii) There shall be no joints in the through-runs of cables. If the length of final circuit or sub-main is more than the length of a standard coil, thus necessitating a through joint, such joints shall be made by means of approved mechanical connectors in suitable junction boxes.

iii) Termination of multistranded conductors shall be done using suitable crimping type thimbles.

1.7 Rating of outlets (to be adopted for design)

i) Incandescent lamps in residential and non-residential buildings shall be rated at 60W and 100W respectively.

ii) Ceiling fans shall be rated at 60W. Exhaust fans, fluorescent tubes, compact fluorescent tube HPMV lamps, HPSV lamps etc. shall be rated according to their capacity. Control gear loses shall be also considered as applicable.

iii) 6A and 16A socket outlet points shall be rated at 100W and 1000W respectively, unless the actual values of loads are specified.

1.8 Capacity of Circuits

i) Lighting circuit shall feed light/fan/call bell points. Each circuit shall not have more than 800 Watt connected load or more than 10 points. However, in case of CFL points where load per point may be less, number of points may be suitably increased.

ii) Power circuit in non-residential building will have only one outlet per circuit.

iii) Each power circuit in residential building can feed following outlets:

a) Not more than 2 Nos. 16A outlets.

b) Not more than 3 Nos. 6A outlets.

c) Not more than 1 No. 16A and 2 Nos. 6A outlets.

iv) Load more than 1 KW shall be controlled by suitably rated MCB and cable size shall be decided as per calculations.

v) Power wiring with Bus trucking

It is permitted to meet large-scale power requirement in a hall, or floor, with use of single phase or 3 phase bus bars running inside a metal enclosure. This will be provided with careful design and use of factory fabricated bus-trucking of reputed

make, conforming to relevant BIS standards and with standard accessories like End feed unit, tap off with necessary safety features like over current, short circuit and earth fault protection. Such tucking will be of specified breaking KA rating.

1.9 Socket outlets

i) Socket outlets shall be 6A 3 pin, 16 Amp 3 pin or 16/6 Amp 6 pin. 5 pin socket outlets will not be permitted.

The third pin shall be connected to earth through protective (loop earthing) conductor, 2 pin or 5 pin sockets shall not be permitted to be used

ii) Conductors connecting electrical appliances with socket outlets shall be of flexible type with an earthing conductor for connection to the earth terminal of plug and the metallic body of the electrical appliance.

iii) Sockets for the power outlets of rating above 1 KW shall be of industrial type with associated plug top and controlling MCB.

iv) Where specified, shutter type (interlocking type) of sockets shall be used.

v) Every socket outlet shall be controlled by a switch or MCB, as specified. The control switch/MCB shall be connected on the 'live' side of the line.

vi) 5A/6A and 15A/16A socket outlets shall be installed at the following positions, unless otherwise specified:

a) Non-residential buildings – 23 cm above floor level.

b) Kitchen – 23 cm above working platform and away from the likely positions of stove and sink.

c) Bathroom – No socket outlet is pem1irted for connecting a portable appliance thereto. MCB/IC switch may be provided above 2 m for fixed appliances, and at least 1 m away from shower.

d) Rooms in residences – 23 cm above floor level, or any other level in special cases as desired by the Engineer.

vii) Unless and otherwise, specified, the control switches for the 6A and 16A socket outlets shall be kept along with the socket outlets.

1.10 Cables

i) Copper conductor cable only will be used for sub-main/circuit/point wiring.

ii) Minimum size of wiring

Light Wiring : 1.5 sqmm.
Power Wiring : 4.0 sqmm.
Power circuits rated : More than 1 KW, Size as per calculation.

iii) Insulation

Copper conductor cable shall be PVC insulated, fire retardant, low smoke (FRLS) type conforming to BIS specification.

iv) Multistranded Cables are permitted to be used.

1.11 Flexible Cable

i) Conductor of flexible cable shall be of copper. The cross sectional area of conductor for flexible cable shall be as per design.

ii) Only 3 core flexible cable shall be used for connecting single-phase appliances.

iii) Unless the flexible cable are mechanically protected by armor or tough rubber or PVC sheath, these shall not be used in workshops and other places where may are liable to mechanical damage.

iv) Flexible cable connection to bell push from ceiling rose shall be taken through steel conduit/metallic casing and capping.

1.12 Wiring Accessories

a) Control switches for point

i) Control switches (single pole switch) carrying not more than 16A shall be modular type. The switch shall be 'On' when the knob is down.

ii) Modular type switches of reputed make along with matching mounting boxes, shall be used in non-residential buildings and residential quarters of all types. Modular type sockets, stepped type fan regulators shall be used. All such boxes, switches and accessories shall be of same make of modular switch manufacturer.

iii) It is recommended to provide double pole MCB in proper enclosure as power out let for window type AC units, geysers etc.

b) Switch Box

i) Switch box shall be hot dip galvanized, factory fabricated. Suitable in size for surface/recess mounting and suitable in size for accommodating the required number of switches and accessories (where required to be used for applications other than modular switches/sockets).

ii) Switch box also can be of non-metallic material. The technical sanctioning / work executing authority will approve specified makes of reputed quantity and specifications.

c) Switch box covers (for application other than modular type)

Phenolic laminated sheets of approved shade shall be used for switch box covers. These shall be of 3 mm thick synthetic phenolic resin bonded laminated sheet as base material and conforming to grade P-I of IS: 2036-1995.

Note: Specification for switch boxes is covered in the section on various types of wiring.

d) Ceiling Rose

i) A ceiling rose shall not be used on a circuit, the voltage of which normally exceeds 250V.

ii) Only one flexible cord shall be connected to a ceiling rose. Specially designed ceiling roses shall be used for multiple pendants.

iii) A ceiling rose shall not embody fuse terminal as an integral part of it.

e) Lamp Holders

i) Lamp holders may be Bakelite batten, angle, pendant or bracket holder type as required. The holder shall be made of brass and shall be rigid enough to maintain shape on application of a nominal external pressure. There should be sufficient threading for fixing the base to the lamp holder part so that they do not open out during attention to the lamp or shade.

ii) Lamp holders for use on brackets and the like shall have not less than 1.3 cm nipple, and all those for use with flexible pendant shall be provided with cord grips.

iii) All lamp holders shall be provided with shade carriers

iv) Where center contact Edison Screw lamp holders are used, the outer or screw contact shall be connected to the 'middle wire', or the neutral conductor of the circuit.

f) Fittings

- Types

  The type of fittings shall be as specified in bid documents.

- Indoor type fittings

  i) Where conductors are required to be drawn through tube or channel leading to the fitting, the tube or channel must be free from sharp angles or projecting edge, and of such size as will enable them to be wired with the conductors used for the final circuit without removing the braiding or sheathing. As far as possible all such tubes or channels should be of sufficient size to permit looping back.

  ii) Wires used within prewired fittings shall be flexible with PVC insulation and 14/0.193mm (minimum) copper conductors. The leads shall be terminated on built-in-terminal block, ceiling rose or connector, as required.

  iii) Fittings using discharge lamps shall be complete with power factor correction capacitors, either integrally or externally. An earth terminal with suitable marking shall be provided for each fitting for discharge lamps.

  iv) Fittings shall be installed such that the lamp is at a height of 2.4 m above floor level, unless otherwise directed by the Engineer.

  v) Fittings made of CRCA shall be phosphatized and powder/epoxy painted. For coastal areas and humid area like toilets, kitchen, for prolonging the life such fittings, corrosion free materials like engineering plastic, aluminum, stainless steel etc. should be used.

- Outdoor fittings

  Outdoor fittings shall have suitable IP protection. It is preferable that street light fittings are of cast aluminum body of IP65, for reducing recurring maintenance cost and improved performance. Where required IP 66 fittings also can he provided for reducing maintenance frequency and cost.

  Other fittings, which are not available with tested IP 65/54 protection, can be properly fabricated with weather proof features, proper gasketing etc. As far as possible corrosion free material like cast aluminum, stainless steel, engineering plastics may be used for fabrication of such fittings, to prolong life of such fittings. There should not be any exposed wiring in such outdoor fittings.

1.13 Attachment of fittings and accessories

a) Conduit wiring system

i) All accessories like switches, socket outlets, call bell pushes and regulators shall be fixed in flush pattern inside the switch/regulator boxes. Accessories like ceiling roses, brackets, batten holders etc. shall be fixed on outlet boxes. The fan regulators may also be fixed on outlet boxes, if so directed by the Engineer.

ii) Aluminium alloy or cadmium plated iron screws shall be used to fix the accessories to their bases.

iii) The switch box/regulator box shall normally be mounted with their bottom 1.25 m from floor level, unless otherwise by the Engineer.

b) Fixing to walls and ceiling

i) Wooden plugs for fixing to wall/ceiling will not be allowed. Fixing will be done with the help of PVC sleeves/Rawl plugs/dash fasteners as required.

ii) Drilling of holes shall be done by drilling machines only. No manual drilling of hole will be allowed.

1.14 Metal Conduit

1.14.1 Application

i) Recessed conduit is suitable generally for all applications. Surface conduit work may be adopted in places like workshops, plant rooms, pump rooms, wiring above false ceiling/ below false flooring, and at locations where recessed work may not be may not be possible to be done. The type of work, viz. surface or recessed, shall be as specified in the respective works.

ii) Flexible conduits may only be permitted for interconnections between switchgear, DB's and conduit terminations in wall.

1.14.2 Material

1.14.2.1 Conduits

i) All rigid conduit pipes shall be of steel and be ISI marked. The pipe wall thickness shall be not less than 1.6 mm (16 SWG) for conduits up to 32mm dia. and not less than 2 mm (14 SWG) for conduits above 32 mm dia. These shall be solid drawn or reamed by welding, and finished with galvanized or stove enameled surface.

ii) The maximum number of PVC insulated cables conforming to IS: 694- 1990 that can be drawn in one conduit is given size-wise in table below, and the number of cables per conduit shall not be exceeded. Conduit sizes shall be selected accordingly in each run.

Maximum number of PVC insulated 650/1100 V grade aluminium / copper Conductor cable conforming to IS: 694-1990

Nominal cross sectional area of conductor in sq.mm.	20 mm		25 mm		32 mm		38 mm		51 mm		64 mm	
	S	B	S	B	S	B	S	B	S	B	S	B
1.50	5	4	10	8	18	12	-	-	-	-		
2.50	5	3	8	6	12	10	-	-	-	-		
4	3	2	6	5	10	8	-	-	-	-		
6	2	-	5	4	8	7	-	-	-	-		
10	2	-	4	3	6	5	8	6	-	-		
16	-	-	2	2	3	3	5	5	10	7	12	8
25	-	-	-	-	3	2	5	3	8	6	9	7
35	-	-	-	-	-	-	3	2	6	5	8	6

Nominal cross sectional area of conductor in sq.mm.	20 mm		25 mm		32 mm		38 mm		51 mm		64 mm	
	S	B	S	B	S	B	S	B	S	B	S	B
50	-	-	-	-	-	-	-	-	5	3	6	5
70	-	-	-	-	-	-	-	-	4	3	5	4

Note:

1) The above table shows the maximum capacity of conduits for a simultaneous drawing in of cables.
2) The columns headed 'S' apply to runs of conduits which have distance not exceeding 4.25 m between draw in boxes and which do not deflect from the straight by an angle of more than 15 degrees. The columns headed 'B' apply to runs of conduit, which deflect from the straight by an angle of more than 15 degrees.
3) Conduit sizes are the nominal external diameters.

iii) No steel conduit less than 20 mm in diameter shall be used.

1.14.2.2 Conduit Accessories

i) The conduit wiring system shall be complete in all respects, including their accessories.

ii) All conduit accessories shall be of threaded type, and under no circumstances pin grip type or clamp grip type accessories shall be used.

iii) Bends, couplers etc. shall be solid type in recessed type of works and may be solid or inspection type as required, in surface type of works.

iv) Other accessories

a) Saddles for surface conduit work on wall shall not be less than 0.55 mm (24 gauges) for conduits up to 25 mm dia and not less than 0.9 mm (20 gauges) for larger diameter. The corresponding widths shall be 19 mm & 25 mm.

b) The minimum width and the thickness of girder clips used for fixing conduits to steel joists, and clamps shall be as per table below.

Girder Clips or Clamps

Size of conduit	Width	Thickness
(i) 20mm	19 mm	0.9 mm (20 SWG)
(ii) 25mm	19 mm	0.9 mm (20 SWG)
(iii) 32mm & above	25 mm	1.2 mm (18 SWG)

1.14.2.3 Outlets

i) The switch box or regulator box shall be made of metal on all sides, except on the front. In the case of cast boxes, the box wall thickness shall be at least 3 mm and in case of welded mild steel sheet boxes, the wall thickness shall not be less than 1.2 mm (18 gauge) for boxes up to a size of 20 cm x 30 cm, and above this size 1.6 mm (16 gauge) thick MS boxes shall be used. The metallic boxes shall be duly painted with anticorrosive paint before erection as per sub-section 1.15 – Painting of these Specifications.

ii) Metal box size

a) Outlet boxes shall be one of the size, covered in the CPWD Schedule of Rates (Elect.), Part - I Internal -1994/2004 and/or as specified:

- 100mmx100mmx60mm deep (nominal size) to provide for 5 pin 5/6 amps socket outlet and 5/6 amps piano type switch
- 180mmx100mmx60mm deep (nominal size) to provide for 5 pin 5/6 amps socket outlet and 5/6 amps piano type switch
- 180mmx100mmx60mm deep (nominal size) to provide for 6 pin 15/16 amps socket outlet and 15/16 amps piano type switch

b) Where a large number of control switches and / or fan regulators are required to be installed at one place, these shall be installed in more than one outlet box adjacent to each other for ease of maintenance.

iii) An earth terminal with stud and 2 metal washers and terminal block shall be provided in each MS box for termination of protective conductors and for connection to socket outlet/ metallic body of fan regulator etc.

iv) A metal strip shall be welded/screwed, to the metal box as support if tumbler type of control switches, sockets and/or fan regulators in flush pattern is provided.

v) Clear depth of the box shall not be less than 60 mm and this shall be increased suitably to accommodate mounting of fan regulations in flush pattern.

vi) The fan regulators can also be mounted on the switch box covers, if so stipulated in the bid specifications, or if so directed by the Engineer.

vii) Except where otherwise stated, 3 mm thick phenolic laminated sheets as per clause 1.12 (c) shall be fixed on the front with brass screws, or aluminum alloy/cadmium plated iron screws as approved by the Engineer.

1.14.3 Installation

1.14.3.1 Common Aspects for recessed and surface conduit works

i) Conduit joints

a) The conduit work of each circuits or section shall be completed before the cables are drawn in.

b) Conduit pipes shall be joined by means of screwed couplers and screwed accessories only. Threads on conduits pipes in all cases shall be between 13mm to 19mm long, sufficient to accommodate pipes to full threaded portion of couplers or accessories.

c) Cuts ends of conduit pipes shall have no sharp edges, nor any burrs left to avoid damage to the insulation of the conductors while pulling them through such pipes.

d) The Engineer, with a view to ensuring that the above provision has been carried out, may require that the separate lengths of conduit etc., after they have been prepared shall be submitted for inspection before being fixed.

e) No bare threaded portion of conduit pipe shall be allowed, unless such bare threaded portion is treated with anticorrosive preservative or covered with approved plastic compound.

ii) Bends in conduit

a) All necessary bends in the system, including diversion, shall be done either by neatly bending the pipes without cracking with a bending radius of not less than 7.5 cm, or alternatively, by inserting suitable solid or inspection type normal bends, elbows or similar fittings, or by fixing cast iron inspection boxes, whichever is most suitable.

b) No length of conduit shall have more than the equivalent of four quarter bends from outlet to outlet.

c) Conduit fittings shall be avoided as far as possible on conduit system exposed to weather. Where necessary, solid type fittings shall be used.

iii) Outlets

a) All outlets such as switches, wall sockets etc. may be either flush mounting type, or of surface mounting type, as specified in the Additional Specifications.

b) All switches (except Piano type switches), socket outlets and fan regulators shall be fixed on metal strips which shall be screwed/ welded to the box. Piano type switches and accessories shall be fixed on the phenolic laminated sheet covers in flush pattern.

iv) Painting after erection

After installation, all accessible surfaces of conduits pipes, fittings, switch and regulator boxes etc. shall be painted in compliance with the clauses under sub-section 1.15 – Painting of these Specifications.

1.14.3.2 Additional requirements for surface conduit work

i) Painting before erection

The outer surface of conduit including all bends, unions, tees, junction boxes etc. forming part of the conduit system, shall be adequately protected against rust when such system is exposed to weather, by being painted with 2 coats of red oxide paint applied before they are fixed.

ii) Fixing conduit on surface

a) Conduit pipes shall be fixed by saddles, secured to suitable approved plugs with screws in an approved at an interval of not more than one meter, but on either side

of the couplers or bends or similar fittings saddles shall be fixed at a distance of 30 cm from the center of such fittings.

b) Where conduit pipes are to be laid along the trusses, steel joists etc. the same shall be secured by means of saddles or girder clips or clamps as required by the Engineer.

c) In long distance straight run of conduit, inspection type couplers at responsible intervals shall be provided, or running threads with couplers and jam nuts shall be provided.

iii) Fixing outlet boxes

Only portion of the switch box shall be sunk in the wall, the other portion being projected out for suitable entry of conduit pipes into the box.

1.14.3.3 Additional requirement for recessed conduit work

i) Making chase

a) The chase in the wall shall be neatly made and of ample dimensions to permit the conduit to be fixed in the manner desired.

b) In the case of building under construction, the conduits shall be buried in the wall before plastering, and shall be finished neatly after erection of conduit.

c) In case of exposed brick/ rubble masonry work, special care shall be taken to fix the conduit and accessories in position along with the building work.

ii) Fixing conduits in chase

a) The conduit pipe shall be fixed by means of staples, J-hooks, or by means of saddles, not more than 60 cm apart or by any other approved means of fixing.

b) All threaded joints of conduit pipes shall be treated with some approved preservative compound to secure protection against rust.

iii) Fixing conduits in RCC work

a) The conduit pipes shall be laid in position and fixed to the steel reinforcement bars by steel binding wires before the concreting is done. The conduit pipes shall be fixed firmly to the steel reinforcement bars to avoid their dislocation during pouring of cement concrete and subsequent tamping of the same.

b) Fixing of standard bends or elbows shall be avoided as far as practicable, and all curves shall be maintained by bending the conduit pipe itself with along radius, which will permit easy drawing in of conductors.

c) Location of inspection / junction boxes in RCC work should be identified by suitable means to avoid unnecessary chipping of the RCC slab subsequently to locate these boxes.

iv) Fixing inspection boxes

a) Suitable inspection boxes to the minimum requirement shall be provided to permit inspection and to facilitate replacement of wires, if necessary.

b) These shall be mounted flush with the wall or ceiling concrete. Minimum 65 mm depth junction boxes shall be used in roof slabs and the depth of the boxes in other places shall be as per IS: 2667-1988.

c) Suitable ventilating holes shall be provided in the inspection box covers.

v) Fixing switch boxes and accessories

Switch boxes shall be mounted flush with the wall. All outlets such as switches, socket outlets etc. shall be flush mounting type, unless other specified in the Additional Specifications.

vi) Fish wire

To facilitate subsequent drawing of wires in the conduit, GI fish wire of 1.6 mm / 1.2 mm (16 / 18 SWG) shall be provided along with the laying of the recessed conduit.

vii) Bunching of Cables

a) Cables carrying Direct Current may, if desired, be bunched whatever their polarity, but cables carrying Alternating Current, if installed in metal conduit shall always be bunched so that the outgoing and return cables are drawn into the same conduit.

b) Wherever the distribution is for single phase loads only, conductors for these phases shall be drawn in one conduit.

c) In case of three phase loads, separate conduits shall be run from the distribution boards to the load points, or outlets as the case may be.

1.14.3.4 Earthing requirements

i) The entire system of metallic conduit work, including the outlet boxes and other metallic accessories, shall be mechanically and electrically continuous by proper screwed joints, or by double check nuts at terminations. The conduits shall be continuous when passing through walls or floors.

ii) A protective (loop earthing) conductor(s) shall be laid inside the conduit between the metallic switch boxes and distribution switch boards and terminated into proper earth lugs/terminals. Only PVC insulated copper conductor cable of specified size, green-yellow in color shall be allowed. Such conductors will not run external to the conduits.

iii) The protective conductors shall be terminated properly using earth studs, earth terminal block etc. as the case may be.

iv) Gas or water pipe shall not be used as protective conductor (earth medium).

1.15 Painting

The scope under this section covers the requirements of painting work in internal electrical installations, carried out manually by brush. This does not cover spray-painting work of factory made items.

1.15.1 Painting work in General

1.15.1.1 Paints

Paints, oils, varnishes etc. of approved make in original tin to the satisfaction of the Engineer shall only be used.

1.15.1.2 Preparation of the surface

The surface shall be thoroughly cleaned and made free from dust or foreign matter before painting is started. The proposed surface may be inspected by the Engineer before the paint is applied.

1.15.1.3 Application

i) Paint shall be applied with brush. The paint shall be spread as smooth and even as possible. Particular care shall be paid to rivets, nuts, bolts and over-lapping. Before drawing out in smaller containers, it shall be continuously stirred with a smooth stick, while painting work is taken up.

ii) Primer coat of anti-corrosive paint shall be given in the case of steel, work, after preparing the surface. In all cases of painting work, finishing shall be with 2 coats of paint in approved shade.

iii) Each coat shall be allowed to dry out sufficiently before a subsequent coat is applied.

1.15.1.4 Precautions

All furniture, fixtures, glazing, floors etc. shall be protected by suitable covering. All stains, smears, splashing, dropping etc. shall be removed. While painting of wiring etc. it shall be ensured that the painting of wall and ceiling etc. is not spoiled in any way.

1.15.1.5 Repainting

i) Painting on old surface in indoor situations will not include primer coat except where specially mentioned in the bid documents. However, where rust has formed on iron and steel surfaces, the spots will be painted with one anti-rust primer coat, after preparing the surface.

ii) In cases of repainting, the old paint shall be removed by first scrapping, or by applying a suitable solvent, and thereafter a fresh coat of the paint shall be applied.

1.15.2 Painting of conduits and accessories

i) Requirement of painting of metallic conduits before installation on surface shall be met as per clause 1.14.3.2 (i).

ii) Requirement of painting of metallic boxes shall be as per clauses 1.14.3.2 (i) and 1.14.3.1 (iv).

iii) After installation in surface or recess, an accessible surface of metallic conduit pipes and fittings, switch boxes and regulator boxes etc. shall be painted with two coats of enamel paint of approved shade.

2. LT DISTRIBUTION SWITCHGEAR

Only following type of switchboards will be used:

a) Main/Sub-main switchboard of cubicle type.

b) Distribution Boards (DBs) – Only pre-wired type MCB/HRC type DBs to be used (as specified). Re-wirable type fuses shall not be used.

c) Specially designed switchboards

Also specially designed switchboards can be used with detailed specification and fabrication drawings approved by the technical sanctioning / work executing authority.

d) Specifications of cubicle panel and pre-wired DB are given below.

The scope of these specifications covers supply/erection/testing and commissioning of the equipment suitable for 415 Volt, 3 Phase, 50 HZ 4 wire system:

i) For each equipment, required IP rating and short circuit rating capacity will be specified. Governing BIS also will be specified.

ii) All the equipment will be factory fabricated in an approved factory having modern fabrication and testing process. It shall have seven tank pretreatment process comprising of degreasing, rinsing, de-rusting, rinsing, phosphatising, rinsing and passivation followed by powder coat painting having a paint thickness of 60 microns or as specified. The powder paint will be subjected to oven-heated process. All panels will be provided with suitable gasket to make it dust/vermin proof.

2.1 Specification of LT Cubicles panel

2.1.1 Cubicle Panel

i) Cubicle panel shall be floor mounted (on a base frame) totally enclosed and extensible type. The general construction shall conform to IS: 8623 (relevant parts)-1993. The design shall include all provisions for safety of operating and maintenance personnel. Degree of IP protection shall be IP-42 for indoor application and IP-54 for outdoors, unless otherwise specified.

ii) The panel shall be compartmentalized type having space and arrangement for incoming cable/bus ducting, incoming switchgear/switchgears, bus coupler, insulated and properly supported compartmentalized bus bars, outgoing compartmentalized switchgear, bus bar supports, joint shrouds, cable alleys of suitable size for cabling routing, support and terminations, interconnection between bus bars and switchgear with auxiliary bus bars/insulated conductors/strips etc. Also the panel will be provided with necessary instrumentation like CTs, PTs, Ammeters, voltmeters, phase indicating lamps, other required instruments, wiring, fuses etc.

iii) It shall be fabricated out of CRCA not less than 2.0 mm thick for load bearing members and 1.6 mm for doors of LT panels. The framework may be Angle Iron/Channel/Bolted type-construction. General constructions shall employ the principle of compartmentalization and segregation of each circuit. Unless otherwise approved, incomer and bus section panels shall be separate and independent and shall not be mixed with sections required for feeders. Each section of the rear accessible type board shall have hinged access door at the rear. Operating handle of the highest unit shall be at a height not more than 1.7 meters. Overall height of the board shall not exceed 2.3 meters.

iv) Arrangement for incoming/outgoing cable termination

Cable entries shall be provided either from the rear or from the front through cable alleys of suitable size. Removable gland plate to be provided for each cable entry. Cable support arrangement to be provided inside cable alley so that cables are neatly arranged and fixed. From each outgoing switch, insulated strip/conductor of suitable size to be provided up to suitable terminal block, which will receive incoming/outgoing cable termination. It is desirable that cables are not terminated directly to switchgear; but terminated through proper terminal blocks.

v) Specification of Cable Terminal Block

Terminal block of reputed make shall be used. The housing material shall be polyamide having unbreakable and fire-retardant characteristic. All the metal parts shall be made up of copper alloy including the screws: Mounting shall be 'Din' or 'G-rail' type. Screws shall be self-captive type. No protection cover is required, and the block should be touch proof.

vi) Bus bars/supports/clearances

Bus bars/supports/clearances: The bus bar system may comprise of a system of main/auxiliary bus bars run in bus bar alleys.

For bus bar material, ratings, current density, insulation, supports, bus bar clearances and joints see para 2.2 (iii).

vii) Earthing

2 Nos. 20 x 3 mm copper strip for LT panel upto 400 Amp. capacity or 2 Nos. 20 x 5 mm copper strip for LT panel of higher capacity shall be fixed all around the panel connected to 2 Nos. earth bus copper strips connected to incoming earth conductors.

(Typical Cubicle Panel is explained in Fig. 53)

viii) Commissioning

After erection, the LT panel will be commissioned after:

a) Tightening of all nuts and bolts.

b) Closing any left out holes to ensure the entire panel is insect proof.

c) Megger testing.

d) Earth testing.

2.1.2 Prewired DB

As a general practice only prewired MCB/HRC type DBs shall be used, on account of their superior technical features, compared to conventional DBs, which don't allow for proper wiring space and wiring termination. Rewritable fuse type DB shall not be used.

Prewired DBs shall have following feature:

i) Recess/Surface type with integral loose wire box.

ii) Phase/neutral/earth terminal blocks for termination of incoming & outgoing wires.

iii) Din Channel for mounting MCBs.

iv) Arrangement for mounting incomer MCB/ RCCB/ RCBO/MCCB as required.

v) Copper Bus bar.

vi) Earthing terminals.

vii) Wiring from MCBs to phase terminal block.

viii) Interconnection between terminal block/incoming switch/bus bar/neutral terminal block/earth terminal connector with specified size of FRLS pre insulated copper conductor cable duly fitted with copper lugs/ thimbles.

ix) Terminal blocks should be suitable for termination of conductor/ cable of required size but minimum rated cross section of the terminal blocks should be 6 sq.mm.

x) Terminal block shall be made of flame retardant polyamide material.

xi) Colored terminal blocks and FRLS wires for easy identification of RYB Phases, Neutral and Earth.

xii) Prewired DB shall be provided with a detachable cassette for safe removal of MCBs, RCCBs. Terminal connectors from the DB without loosening the internal cable connections of phase and neutral circuits. (This is an optional feature).

xiii) The prewired DB shall have peel able poly layer on the cover for protection from cement, plaster, paints etc. during the construction period.

xiv) Detachable plate with Knock out holes shall be provided at the top/bottom of board. Complete board shall be factory fabricated and pre-wired in factory ready for installation at site. The box and cover shall be fabricated from 1.6 mm sheet steel, properly pretreated, phosphatized with powder coated finish.

Where specified it shall be of double door construction provided with hinged cover in the front. (See Fig. 54)

Note: Prewired DB will be factory manufactured by reputed manufacturer of MCB DBs. The tripping characteristics of MCBs are given below:

TRIPPING CHARACTERISTICS OF MCBs

Based on the tripping characteristics, MCBs are available in 'B' and 'C' curve to suit different types of applications.

'B' Curve: For protection of electric circuits with equipment that does not cause surge current (lighting and socket outlet circuits)

Short circuit release is set to 3 - 5 In

'C' Curve : For protection of electric circuits with equipment that cause surge current (inductive and motor circuits)

Short circuit release is set to 5 – 10 In

'D' Curve: For protection of electric circuits which cause high inrush current when they are switched ON, typically 15 times the normal running current (Transformers, Heavy Start Motors, 2 Pole Motors)

Short circuit release is set to 10 – 20 In

2.2 Rising Mains

i) Application

a) The rising mains are essentially used in electrical distribution system in building 2 storied and above. These are only for indoor applications. For vertical power distribution, this is a preferred method, compared to rising cable system and is more-reliable and safe from point of view of fire hazard.

b) Tap-off arrangements shall be provided on the rising mains with tap off boxes.

c) The rising main shall comprise of sheet metal enclosure, bus bars, tap off points, tap off boxes, end feed units, fire barriers, expansion joints, trust pads, end covers and fixing brackets etc.

d) The rising main shall conform to IS: 8623 and IEC 439 and shall be suitable for 415V, 3 phase, 50 Hz supply and insulation of rising mains shall be capable of withstanding the voltage of 660 volt A.C. Degree of IP protection and short circuit rating shall be specified.

ii) Enclosure

The enclosure shall be made from sheet steel of 1.6 mm thickness.

iii) Bus bars

a) Rating

Bus bar shall be made of wrought aluminum of aluminum, alloy, or electric grade copper, confirming to relevant Indian Standard, as specified. The ratings of the bus bars shall be 100A, 200A, 300A, 400A, 500A, 600A, or 800A as specified.

b) Current density

Bus bars shall be of sufficient cross-section so that a current density of 130A/sq.cm (800A/sq.inch) is not exceeded at nominal current rating for aluminum bus bars, and 160A/sq.cm (1000A/sq.inch) for copper bus bars. The minimum sizes of sections of bus bars are given in table below.

Aluminium / Copper bus bar sections

Current ratings in amps. Upto	**Recommended rectangular cross section**			
	Aluminium		**Copper**	
	No. of strips/phase	**Size (mm)**	**No. of strips/phase**	**Size (mm)**
100	1	25x5	1	20x3
200	1	30x5	1	25x5
300	1	50x5	1	40x5
400	1	50x6	1	50x5
500	1	75x6	1	60x5
600	1	80x6	-	-
800	1	100x6	-	-
1000	1	100x10	-	-
12000	1	125x10	-	-
1600	2	100x10	-	-
2000	2	125x10	-	-
2500	3	125x10	-	-

Note:

i) In larger bus bars of sizes above 1000 amps, the sections can be accepted in other rectangular cross-sections and numbers also, provided the total cross-

sectional area offered is not less than the total cross-sectional area shown in the above table against the respective bus bar rating.

ii) With aluminium bus bars, only aluminium wire/solid bar connections shall be made for incoming/outgoing mountings on the switchboards.

iii) With copper bus bars, only copper wire/solid bar connections shall be made for incoming/outgoing mountings on the switchboards.

c) Cross Section of bus bars

The cross section of the neutral bus bar shall be the same as that of the phase bus bar for bus bars of capacities upto 200A; for higher capacities, the neutral bus bar must not be less than half the cross-section of that of the phase bus bar.

d) Insulation

Each bus bar shall be suitably insulated with PV9 sleeves/tapes. The insulation of the rising mains shall be capable of withstanding the voltage of 660V of A.C.

e) Bus bar supports

Bus bar support insulators shall be class F insulators made of no hygroscopic, non-combustible, track resistant and high strength FRP/SMC/DMC material, and shall be of suitable size and spacing to withstand the dynamic stresses due to short circuit currents. Spacing between two insulators should not exceed 250 mm.

f) Bus bar Clearances

i) The minimum clearance to be maintained for enclosed indoor air insulated bus bars for medium voltage applications shall be as follows:

Between	Min. Clearances
Phase to earth	26 mm
Phase to phase	32 mm

Note: For strip connection form bus bars to switchgear, the above clearances don't apply.

ii) Bus bar joints

a) Bus bar joints shall be thoroughly cleaned and suitable oxidizing grease shall be applied before making the joint.

b) High tensile bolts, plain and spring washers shall be provided to ensure good contact at the joints.

c) The overlap of the bus bars at the joints shall be not less than the area of the cross section of the bus bars.

g) Bus bar marking

Bus bars and main connections shall be marked by color or letter as per table below.

(i) Marking for A.C. bus bars & main connections

S. N	Bus bar and main connections	Color	Letter/Symbol
i)	Three Phase	Red, Yellow, Blue	R.Y.B.
	Two Phase	Red, Blue	R, B
	Single Phase	Red	R
ii)	Neutral connection	Black	N
iii)	Connection to earth	Green	E
iv)	Phase variable (such as connections to reversible motors)	Grey	Gy

(ii) For D.C. bus bars and main connections

S. N.	Bus bar and main connections	Color	Letter/Symbol
(i)	Positive	Red	R, or plus
(ii)	Negative	Blue	B, or minus
(iii)	Neutral connection	Black	N
(iv)	Connection to earth	Green	E
(v)	Equalizer	Yellow	Y
(vi)	Phase variable (such as connection to reversible motors)	Grey	Gy

Note: In the wiring diagram, positive and negative should be indicated by '+' and '-' respectively.

iv) Expansion joint

Expansion joint made of aluminum/copper strips shall be provided wherever necessary, to take care of expansion and contraction of the bus bars under normal operating conditions. This shall be invariably provided whenever the length of the rising mains exceeds 15 m.

v) Thrust Pads

a) The bus bars shall be provided with thrust pads so that the expansion of the conductors is upwards only.

b) The bus bar clamps and insulators shall be designed to withstand the forces due to short circuit current. They shall also permit free vertical movement of the bus bars during expansion and contraction.

vi) Mounting

i. Incoming cable will be connected to the rising main through an end feed unit, consisting of switch fuse unit with HRC fuse/MCCB/ACB of required capacity and cable end box.

ii. Tap-off boxes at specified intervals and height shall be provided on rising main to tap power. The box shall consists of set of HRC fuses or MCCB/Switch fuse unit, so that power from rising main can be switched ON/OFF and provided with suitable overload/short circuit protection.

iii. Distribution boards/switch boards will not be mounted on rising main. Such boards will be separately erected on floor/wall and connected to tap-off box with suitable copper conductor cable (See Fig. 55).

vii) Construction features

i. The rising mains shall be manufactured in convenient sections to facilitate easy transportation and installation. The sections shall be connected to form a vertical run at site. Each section shall be provided with suitable wall straps at convenient intervals for fixing to the wall.

ii. The enclosure shall be sturdy so as to withstand the internal and external forces resulting from the various operating conditions.

iii. The front covers shall be detachable. Neoprene gaskets shall be provided between the covers and the side channels.

iv. The enclosure shall have a degree of protection not less than IP 42.

v. The rising main shall be designed for temperature rise not exceeding 40 degree C over ambient temperature of 45 degree C.

vi. Built-in fireproof barriers having 2 hr. fire rating shall be provided to restrict the spread of fire through the rising mains from one section to the adjacent section.

vii. Necessary provisions for ventilation shall be made at suitable intervals. These shall be complete with welded non-ferrous metallic mesh to prevent entry of vermin.

viii. Two numbers of copper earth strips of 20x3 mm (for Rising Main upto 400 Amp.) and 20x5mm (for Rising main above 400 upto 800 Amp.) shall be provided alongside the rising mains enclosure, and shall be bolted to each section of the rising mains.

viii) Installation of rising mains

i. Rising mains shall be installed on walls, to which the foundation bolts shall be suitably grouted (in a shaft of adequate size for rising main and floor distribution panel). The foundation bolts shall be provided by the Contractor without extra payment.

ii. Structural items

a. No structural member in the building shall be damaged/altered, without prior approval from the competent authority through the Engineer.

b. Structural provisions like openings, cutouts, if any, provided by the department for the work, shall be used. Where these require modifications, or where fresh provisions are required to be made, such contingent works shall be carried out by the contractor at his cost.

c. All such openings in floors provided by the Department shall be closed by the contractor after installing the cables/conduits/ rising mains etc. as the case

may be, by any suitable means as approved by the Engineer without any extra payment.

d. All chases required in connection with the electrical works shall be provided and filled by the Contractor at his own cost to the original architectural finish of the buildings.

ix) Commissioning

Before connecting mains supply after installation, pre-commissioning checks comprising Megger test, checking the tightness of connections, body earth connection etc. shall be carried out and recorded.

3. EARTHING

The scope of these specifications covers the essential requirements of earthing system component and their installation. Sub-section 3.8 lays down criteria for their design. For details not covered in these specifications IS Code of practice on earthing (IS: 3043-1987) shall be referred to.

3.1 Application

i) The electrical distribution system in the department is with earthed neutral (i.e. neutral earthed at the transformer/generator end) in addition to the neutral earthing provision is made for earthing the metallic body of equipment and non-current carrying metallic components in the sub-station, as well as in the internal/ external electrical installations.

ii) Earthing system is also required for lightning protection, computer installation and hospital operation theaters etc. for functional reasons.

iii) Earthing requirement are laid down in Indian Electricity Rules, 1956, as amended from time to time, and in the regulations of the Electricity Supply Authority concerned. These shall be complied with.

iv) Application for Internal E.I.

a) Every sub-main will have earth continuity conductor to run along with sub-main wiring. In case of 3-phase sub-main wiring two earth continuity conductors shall be provided.

b) Every circuit will have its earth continuity conductor to run along with circuit wiring. In case of 3-phase circuit two earth continuity conductors shall be provided.

c) Looping of earth is allowed only in case of point wiring.

d) When 2/3 power outlets are looped to one circuit, earth looping of these outlets is permissible.

3.2 Types of Electrodes and Material

3.2.1 Earth Electrodes

3.2.1.1 Types

The type of earth electrode shall be any of the following, as specified. (For selection criteria in designs, sub-section 3.8 may be referred to).

a) Pipe earth electrode.

b) Plate earth electrode.

c) Strip or conductor earth electrode.

3.2.1.2 Electrode materials and dimensions

i) The materials and minimum sizes of earth electrodes shall be as per table below.

Materials and sizes of earth electrodes

Type of Electrode	Material	Size
Pipe	GI medium	40mm dia. 3.45m long (Without any joint)
Plate	(i) GI (ii) Copper	60 cm x 60 cm x 6 mm thick 60 cm x 60 cm x 3 mm thick
Strip	(i) GI (ii) Copper	100 sq.mm. section 40 sq.mm. section
Conductor	(i) Copper	4mm dia (8 SWG)

Note: Galvanization of GI items shall conform to Class IV of IS: 4736-1986.

ii) GI pipe electrodes shall be cut tapered at the bottom, and provided with holes of 12mm dia, drilled not less than 7.5 cm from each-other upto 2 m of length from the bottom.

iii) The length of the buried strip or conductor earth electrode shall be not less than 15 m. This length shall suitably be increased if necessary, on the basis of the information available about soil resistance, so that the required earth resistance is obtained. Prior approval of the Engineer shall be taken for any such increase in length.

iv) All hardware items used for connecting the earthing conductor with the electrode shall be of GI in the case of GI pipe and GI plate earth electrodes, and forged tinned brass in case of copper plate electrodes.

3.2.2 Earthing Conductor & Sizes

i) The earthing conductor (protective conductor from earth electrode up to the main earthing terminal/earth bus, as the case may be) shall be of the same material as the electrode, viz. GI or copper, and in the form of wire or strip as specified.

ii) The size of earthing conductor shall be specified, but this shall not be less than the following (For calculating the size of the earthing conductor in design, sub-section para 3.8.3.5).

a) 4mm dia. (8SWG) copper wire.

b) 25mm x 4mm in the case of GI strip, or

c) 20mm x 3mm in the case of copper strip.

iii) Earthing conductor larger than the following sectional areas need not be used, unless otherwise specified.

a) 150 sq.mm. in case in GI, or

b) 100 sq.mm. in case of copper.

3.2.3 Earth continuity/loop earthing conductor & sizes

i) The material and size of protective conductors shall be as specified below (for criteria in design of these sub-section 3.8 may be referred to):

Size of phase conductor	**Size of protective conductor of the same material as phase conductor**
Up to 4 sq.mm.	4 sq.mm.
Above 4 sq.mm to 16 sq.mm	Same size as phase conductor
Above 16 sq.mm to 35 sq.mm.	16 sq.mm
Above 35 sq.mm	Half of the phase conductor

3.3 Location for earth electrodes

i) Normally an earth electrode shall not be located closer than 1.5 mm from any building. Care shall be taken to see that the excavation for earth electrode does not affect the foundation of the building; in such cases, electrodes may be located further away from the building, with the prior approval of the Engineer.

ii) The location of the earth electrode will be such that the soil has a reasonable chance of remaining moist as far as possible. Entrances, pavements and roadways, should be avoided for locating earth electrodes.

3.4 Installation

3.4.1 Electrodes

3.4.1.1 Various type of electrodes

i) Pipe electrode

a) Pipe electrode shall be buried in the ground vertically with its top at not less than 20 cm below the ground level. The installation shall be carried out as shown in Fig. 56.

b) In locations where the full length of pipe electrode is not possible to be installed due to meeting a water table, hard soil or rock, the electrode may be to reduced length, provided the required earth resistance result is achieved with or without additional electrodes, or any alternative method of earthing may be adopted, with the prior approval of the Engineer. Pipe electrodes may also be installed in horizontal formation in such exceptional cases.

ii) Plate electrode

Plate electrode shall be buried in ground with its faces vertical, and its top not less than 1.5 m below the ground level. The installation shall be carried out as shown in Fig. 57.

iii) When more than one electrode (plate/pipe) is to be installed, a separation of not less than 2 m shall be maintained between two adjacent electrodes.

iv) Strip of conductor electrode

a) The strip or conductor electrode shall be buried in trench not less than 0.5 m deep.

b) If conditions necessitate the use of more than one strip or conductor electrode, they shall be laid as widely distributed as possible, in a single straight trench where feasible, or preferably in a number of trenches radiating from one point.

c) If the electrode cannot be laid in a straight length, it may be laid in a zigzag manner with a deviation upto 45 degrees from the axis of the strip. It can also be laid in the form of an arc with curvature more than 1m or a polygon.

3.4.1.2 Artificial treatment of soil

When artificial treatment of soil is to be resorted to, the same shall be specified in the schedule of work. The electrode shall be surrounded by charcoal/ coke and salt as indicated in Fig. 56 and 57. In such cases, excavation for earth electrode shall be increased as per the dimensions indicated in these figures.

3.4.1.3 Watering arrangement

i) In the case of plate earth electrodes, a watering pipe 20 mm dia. Medium class pipe shall be provided and attached to the electrodes as shown in Fig. 54 and 55. A funnel with mesh shall be provided on the top of this pipe for watering the earth.

ii) In the case of pipe electrodes, a 40 mm x 20 mm reducer shall be used for fixing the funnel with mesh.

iii) The watering funnel attachment shall be housed in a masonry enclosure of size not less than 30 cm x 30 cm x 30 cm.

iv) A cast iron / MS frame with MS cover, 6mm thick, and having locking arrangement shall be suitably embedded in the masonry enclosure.

3.4.2 Earthing conductor (Main earthing lead)

i) In the case of plate earth electrode, the earthing conductor shall be securely terminated on to the plate with two bolts, nuts, check nuts and washers.

ii) In the case of pipe earth electrode, wire type earthing conductor shall be secured as indicated in Fig. 56 using a through bolt, nuts and washers and terminating socket.

iii) A double C-clamp arrangement shall be provided for terminating tape type earthing conductor with GI watering pipe coupled to the pipe earth electrode. Galvanized "C" shaped strips, bolts, washers, nuts and check nuts of adequate size shall be used for the purpose.

iv) The earthing conductor from the electrode up to the building shall be protected from mechanical injury by a medium class, 15mm dia. GI pipe in the case of wire, and by 40mm dia. medium class GI pipe in the case of strip. The protection pipe in ground shall be buried at least 30 cm deep (to be increased to 60 cm in case of road crossing and pavements). The portion within the building shall be recessed in walls and floors to adequate depth in due co-ordination with the building work.

v) The earthing conductor shall be securely connected at the other end to the earth stud/earth bar provided on the switch board by:

a) Soldered or preferably crimped lug, bolt, nut and washer in the case of wire, and

b) Bolt, nut and washer in case of strip conductor.

In the case of substations or alternators, the termination shall be made of the earthing terminal of the neutral point on the equipment and/or the earth bus, as the case may be.

3.4.3 Loop earthing/Earth continuity conductor

i) Earth terminal of every switchboard in the distribution system shall be bonded to the earth bar/terminal of the upstream switch board by protective conductor(s).

ii) Two protective conductors shall be provided for a switchboard carrying a 3-phase switchgear thereon.

iii) Loop earthing of individual units will not be however necessary in the case of cubicle type switchboards.

iv) The earth connector in every distribution board (DB) shall be securely connected to the earth stud/earth bar of the corresponding switch board by a protective conductor.

v) The earth pin of socket outlets as well as metallic body of fan regulators shall be connected to the earth stud in switch boxes by protective conductor. Where the switch boxes are of non-metallic type, these shall be looped at the socket earth terminals, or at an independent screwed connector inside the switch box. Twisted earth connections shall not be accepted in any case.

3.5 Earth Resistance

i) The earth resistance at each electrode shall be measured. No earth electrode shall have a greater ohmic resistance than 5 ohms as measured by an approved earth testing apparatus. In rocky soil the resistance may be up to 8 ohms.

ii) Where the above stated earth resistance is not achieved, necessary improvement shall be made by additional provisions, such as additional electrode(s), different type of electrode, or artificial chemical treatment of soil etc., as may be directed by the Engineer.

3.6 Marking

i) Earth bars/terminals at all switch boards shall be marked permanently, either as "E" or as

ii) Main earthing terminal shall be marked "SAFETY EARTH - DO NOT DISCONNECT".

3.7 Use of Residual Current Devices (RCDs)

An extract on selection and application of RCDs (also known as Residual Current Operated Circuit Breakers-RCCBs) from IS: 12640-2008 (Part 1) is given at sub-section 3.9. Provision of RCD shall be specified in individual cases keeping in view the type, use, importance, system of earthing and nature of electrical installations to be protected by the RCCBs, requirements of the local electric supply company, etc. The sensitivity shall be 30 mA, 100 mA, 300 mA, or 500mA, as specified.

3.8 Earthing (Additional Specifications)

3.8.1 This sub-section indicates details useful in the design of earthing as applicable to the installations generally encountered in the works department. For complete details, IS: 3043-1987 shall be referred to. This sub-section shall supplement the requirements laid down in sub-sections above of these specifications on earthing.

3.8.2 Earthing requirements

3.8.2.1 Statutory Requirement

i) All medium voltage equipment shall be earthed by two separate and distinct connections with earth. In the case of high and extra high voltages, the neutral points shall be earthed by not less than two separate and distinct connections with earth, each having its own electrode at the generating station or substation, and may be earthed at any other point, provided no interference is caused by such earthing. If necessary, the neutral may be earthed through suitable impedance.

ii) Necessary protective device shall be provided against earth leakage.

3.8.2.2 Supply system requirement

"System Earthing" is provided to preserve the security of the supply system. This is done by limiting the potential of live conductors with reference to earth, to such values as consistent with the level of insulation applied. Earthing the neutral point of the transformer ensures reasonable potential to earth, including at the time when the HV supply is impressed on the transformer. Earthing also ensures efficient operation of protective gear in the case of earth faults. Earthing may not give protection against faults that-are not essentially earth faults. For example, if a phase conductor on an overhead spur line breaks, and the part remote from the supply falls to the ground, it is unlikely that any protective gear relying on earthing, other than current balance protection at the substation, will operate, since the earth fault current circuit includes the impedance of the load that would be high relative to the rest of the circuit.

3.8.2.3 Installation protection requirement

"Equipment Earthing" is provided to ensure that the exposed conductive parts in the installation do not become dangerous by attaining a high touch potential under conditions of faults. It should also carry the earth fault currents, till clearance by protective devices, without creating a fire hazard.

3.8.2.4 Special requirements

3.8.2.4.1 "Static Earthing" is provided to prevent building up of static charges, by connections to earth at appropriate locations. Example, operation theaters in hospitals. (For details, please refer to IS: 7689-1989 and the National Electrical Code).

3.8.2.4.2 "Clean Earth" may be needed for some of the data processing equipment. These are to be independent of any other earthing in the building. (For details, please refer to IS: 10422-1982 and IS: 3043-1987).

3.8.2.4.3 Earthing is essentially required in protection of buildings against lightning. (For details, please refer to Chapter 9 and Appendix-H & I of CPWD General Specifications for Electrical Works, Part-1 Internal, 2005).

3.8.3 Types of System Earthing

3.8.3.1 The various types of system earthing in practice are indicated below, out of which TN-S and T-TN-S systems are generally applicable to installations in the works department.

3.8.3.1.1 TN-S system

Neutral is earthed at source. In addition to the phase and neutral conductors, an independent protective earth (PE) conductor connected to the source earth is also run with the supply line. All the exposed conductive parts of an installation are connected to this PE conductor via the main earthing terminal of the installation. Independent earth electrode is also necessary within the consumer premises at the main earthing terminal.

3.8.3.1.2 TN-C system

Neutral is earthed at source. No separate PE conductor is run with the supply line, nor in the internal installations, since neutral and PE are on a common conductor. All exposed conductive parts of an installation as well as the neutral line are connected to this PE&N conductor. (A CNE cable is used for wiring such installations). Additional earth electrode has to be provided for this conductor locally for 3 phase consumers.

3.8.3.1.3 TN-C-S system (Also called Protective Multiple Earthing-PME system)

Supply is as per TN-C system. The arrangement in the installations is as per TN-S system, i.e. The PE and N are combined in one conductor at supply line. This is earthed at source as well as at frequent intervals. There will be independent protective conductor in the installation. Consumer also normally provides earth electrode terminating on to main earth electrode in his installation, and this is in turn "linked" to the PE&N conductor from supply line. All the exposed conductive parts in the installation are connected to the PE&N conductor, through protective conductors and this main earthing terminal link.

3.8.3.1.4 T-TN-S system (for 6, 0.6 or 11 KV bulk supply)

No earth is provided with HV supply line, which is terminated in delta connected transformer primary. Neutral of the transformer (star connected) secondary is earthed. Independent earth electrodes and bus are provided for the body earthing. Protective conductors are run throughout the LT distribution from the same for equipotential building.

3.8.3.1.5 TT system

Neutral is earthed only at source and no PE conductor is given with supply line. All the exposed conductive parts of the installation are connected to an earth electrode at consumer end, which is independent of the source earth, electrically.

3.8.3.1.6 IT system

The source has either no earth or is earthed through high impedance. All the exposed conductive parts of the installation are connected to an earth electrode, which is independent of the source earth, electrically.

3.8.3.2 Concept of protection against indirect contact

3.8.3.2.1 The most commonly and successfully used method of protection against indirect contact is by "Earthed Equipotential bonding and automatic disconnection of supply" details of which are elaborated in IS: 732-1989 and IS:3043-1987. All the exposed conductive parts are connected through protective (loop earthing) conductors to the main earthing terminal. All the extraneous conductive parts, which are simultaneously accessible with the exposed conductive parts, are also bonded to the main earthing terminal through main bonding conductor so that there is no dangerous potential between the exposed and the extraneous conductive parts. The earth fault loop impedance (EFLI) and the characteristics of the tripping devices are coordinated such that the faulty circuit is automatically disconnected before there is a persistent touch voltage at the exposed conductive part over a period of time, causing a shock hazard. If the disconnecting time is not satisfactory due to large EFLI, supplementary bonding between the exposed and the extraneous

conductive parts is provided. 'Alternatively, use of RCDs becomes very relevant in most such situations. (See sub-section 3.9 for information on selection *of* RCDs). For more details, IS: 3043-1987 may be referred to.

Note: Decision regarding the providing of RCD (RCCB) shall be taken in individual cases keeping in view the type, use, importance, system of earthing and nature of electrical installations to be protected by the RCD, requirements of the local Electric Supply Companies etc.

3.8.3.2.2 Earthing (comprising the electrode, earthing conductor, main earthing terminal etc.) and protective conductors in an installation are thus vital components in this system of protection against shock hazards. The concept is indicated diagrammatically in Fig. 58 & Fig. 59 indicates the method of ensuring the same, as envisaged in these specifications.

3.8.3.2.3 Rule 61A of Indian Electricity (I.E.) Rules, 1956 calls for protective devices against earth leakages for certain loads. This should be complied with.

3.8.3.2.4 The following exposed conductive parts are exempted from bonding to earth:

i) Overhead line insulator, wall brackets or another metal connected to them, provided they are out of arm's reach.

ii) Inaccessible steel reinforcement in RCC poles.

iii) Exposed conductive parts that cannot be gripped or contacted by a major surface of the human body provided a protective conductor connection couldn't be readily made, or reliably maintained.

iv) Fixing screws of non-metallic parts provided there is no risk of them contacting live parts.

v) Short lengths of conduits or similar items which are not accessible.

vi) Metal enclosure for mechanical protection of double insulated equipment.

3.8.3.3 Selection of Type of Electrodes

Following are general guidelines for the selection of the type of electrodes:

Type of electrode	Application
GI Pipe	Internal electrical installations like Distribution Board and Meter Boards (in residential quarters), feeder pillars and poles etc.
GI Plate	i. For firefighting pumps and water supply pumps. ii. Lighting conductors.
Copper plate	Neutral earthing of transformers/ generating sets.
Strip/Conductor	Locations where it is not possible to use other types.

3.8.3.4 Number of Earth Electrodes

i) In all cases, relevant provisions of Rules 33, 61 and 67 of the Indian Electricity Rules, 1956 as amended, shall be complied with.

ii) Non-current carrying metal parts of all apparatus utilizing power supply at voltage exceeding 250 volts shall be earthed by two separate and distinct connections to the earth bus, or to two separate and distinct earthing sets.

iii) The number of earthing electrodes for substations and generating sets shall be as under:

Description	No. of sets
For neutral earthing of each transformer	2 sets
For body earthing of all the transformers, HT/LT Panels and other electrical equipment in the Substation/power house	2 sets
For neutral earthing of each generating set	2 sets
For body earthing of all the generating sets, LT panels and other electrical equipment in the generator room	2 sets

Where the generator and substation equipment are located together in the same building, the body earthing can be common for all the electrical equipment in the building.

iv) Separate earth electrodes shall be provided for lightning arrester / lightning conductors.

3.8.3.5 Size of productive conductor

3.8.3.5.1 The cross section of a protective conductor may be calculated by either of the following 2 methods, the second one being used for designs in general, and the first one for checking purposes.

i) $S \geq \sqrt{(I^2 t)}/k$

where,

S = Cross sectional area of protective conductor in sq.mm.

I = Earth fault (Leakage) current in Amp.

T = Total tripping time of the device in sec. (not exceeding 5 sec.)

k= Factor dependent on the material of the protective conductor insulation if any thereon, and initial and final temperatures.

$I = U_o/Z_s$

where,

U_o = Nominal phase voltage to earth.

Z_s = Earth fault loop impedance (considering its 5 seconds value).

Note 1: Values of Z_s are available in Tables in IEE Wiring Regulations, UK, dependent on tripping devices. Alternatively, this can be calculated.

Note 2: Values of K for different materials are given in IS: 3043 for various parameters.

ii) The minimum shall be as per the following:

Size of phase conductor	Size of protective conductor of the same material as phase conductor
S up to 16 sq.mm.	S sq.mm.
S = 16 to 35 sq.mm.	16 sq.mm.
S > 35 sq.mm.	S/2 sq.mm.

Note: If the material of the protective conductor is different from that of the phase conductor, the size as per the above should be multiplied by K1/K2, where K1 is the K factor for phase conductor material, and K2 for the protective conductor material. As a rough guide, the following values can be taken:

K1/K2 for

Copper

---------- = 1.20 to 1.24

Aluminium (Insulated)

Copper

---------- = 2.17 to 2.25

Steel wire (Insulated)

Copper

---------- = 2.31 to 2.45

Steel (Conduits/Trunking)

3.8.3.5.2 The minimum acceptable size of a protective conductor shall be 2.5 sq.mm. if protected mechanically, and 4 sq.mm. if otherwise.

3.8.3.6 Size of earthing conductor

3.8.3.6.1 The earthing conductors shall comply with the provisions of clause 3.8.3.5 above, except that the minimum cross sectional area shall be 16 sq.mm. (Copper or steel) when protected against corrosion, and 25 sq.mm. copper, or 50 sq.mm. steel when not protected against corrosion.

3.8.3.6.2 For determining the size of earthing conductor for substations and generating sets, IS: 3043-1987 may be referred to.

3.8.3.7 Size of bonding conductor

The main bonding conductor should be half the size of the earthing, conductor, subject to a minimum of 6 sq.mm. and maximum of 25 sq.mm. copper, or equivalent sizes for other materials. This is applicable for TN-S and TNC-S system only.

3.8.3.8 Details for Contract purposes

While this sub-section provides information on design considerations, the sizes of the conductors, types of electrodes etc. shall be as laid down in the bid documents of individual works, and as directed by the Engineer.

3.9 Guidelines for Selection and Application of RCCBs (RCDs)

i) IS 732-1989 recognizes two forms of shock hazard, 'Indirect contact' and 'Direct contact'. The objective is to achieve safety to personnel and property through the best possible means in the most economic manner.

ii) The most commonly used protective measure against indirect contact is termed "main equi-potential bonding and automatic disconnection of supply". Irrespective of the type of protective device used, the aim is to prevent dangerous 'touch voltages' persisting on accessible conductive parts which become live under earth fault conditions. Use of RCCBs is only one of the means that would provide automatic disconnection of supply in the event of shock hazard. The use of RCCB is not considered, as a sole means of protection and it does not obviate the need to apply other protective measures. Some broad guidelines are provided in this sub-section on these issues.

3.9.1 Residual Current Operated Circuit Breaker (RCCB)

3.9.1.1 In general, every circuit is provided with a means of over current protection. If the earth fault loop impedance is low enough to cause these devices to operate within the specified times, such devices can be relied upon to give the requisite automatic disconnection of supply. Where the earth fault loop impedance is too large, efforts are required to make it low enough. Guidelines are available in IS: 3043-1987. When protection against indirect contact is decided to be provided by RCCB, IS: 732-1989 prescribes that the product of its rated residual current (rated tripping current) in amperes and the earth loop impedance in ohms should not exceed the value 50.

3.9.1.2 Fault voltage operated circuit breakers (voltage operated ELCB) are not preferred devices against shock protection. This sub-section covers only truly current-operated devices. These are of different types. The following are the two main types:

a) Residual current devices not dependent on line voltage, and

b) Residual current devices dependent on line voltage.

3.9.2 Choice of RCCBs

Where RCCBs are required to be used for affording shock protection; there are several broad parameters that are required to be carefully chosen. These are described in the following clauses.

3.9.2.1 Location

RCCB can be used as a protective measure to the entire installation, or part, or to an item of equipment. This is determined by the security of supply desired in certain parts of the same installation when RCCB operates. Where only one RCCB is being employed to protect the entire installation, it is necessary that it is located at the main distribution board, at the origin of the installation.

3.9.2.2 Type of RCCB

RCCBs are suitable in general for various applications. However, devices suitable for household applications are to be verified for additional requirements as given in this sub-section. RCCB that has its automatic opening intentionally delayed may be preferred under certain circumstances, Portable RCCBs may be necessary especially in situations where portable/ mobile equipment pose a shock hazard against which other suitable means of protection are not available. Portable RCCBs are required to be tested (using the test button) each time they are used.

3.9.2.3 Rated current

The ISS restricts the rated current of the device to an order of magnitude of 125A. Use of RCCB in circuits of higher rated currents is not envisaged for the time being.

3.9.2.4 Rated tripping current

i) The preferred rated currents of RCCBs are 10, 30, 100 and 300 mA. RCCBs having minimum operating currents of 30mA are intended to give protection against 'indirect contact'. RCCB having minimum operating currents of 30 mA and below are generally referred to as having 'high sensitivity' and can give protection against direct contact' in case of failure of other protective measures. It is essential that an RCCB is not used as a sole means for protection against direct contact.

ii) It is emphasized that the value of leakage current that can flow before the RCCB has operated can be higher than the rated tripping current, the actual value being determined by the impedance of the circuit on which the fault occurs. The rated tripping current is a value assigned by the manufacturer at which the RCCB opens under specified

conditions. While the speed of operation will not be significantly affected by the value of leakage current, RCCB can open at any value between 50 to 100 percent of the rated tripping current.

iii) The RCCB should be so chosen as to have the lowest suitable tripping current. Lower the tripping current, the greater is the degree of protection afforded. Nevertheless, it would introduce the possibility of nuisance tripping and may also become unnecessarily expensive. The minimum operating current will, therefore, have to be above any standing leakage that may be unavoidable in the installation.

3.9.2.4.1 Discrimination

When more than one RCCB is required to be used by grading the sensitivities, it is possible to achieve discrimination amongst RCCB in the same circuit. Discrimination may also be achieved by selectively employing devices having their tripping times intentionally delayed.

3.9.2.4.2 Type of system earthing

The choice of right sensitivity of RCCB would also be determined by the type of earthing system adopted in the installation. The vectoral sum of leakage currents of equipment supplied by an installation or part of an installation by an RCCB shall be less than one half of the rated residual operating current of the device and it may be necessary to sub-divide the earthing arrangement for this reason. Reference is also invited to IS: 3043-1987 "Code of practice for earthing", which gives guidelines on the use of RCCB for different types of system earthing.

3.9.2.5 Breaking capacity

i) When using RCCBs, it is necessary to assess the prospective current value in the location where it is likely to be installed and ensure that where higher withstanding or breaking capacities are desirable, suitable back-up protection is available in the system. This could be by means of a fuse or another circuit breaker (MCB), which is in series with the RCCB. The over current / short circuit protective device is then said to provide back-up protection for the RCCB. Alternately, RCCBs with integral over current/short circuit protection could be employed.

ii) In practice, the functions of RCCB and that of the over current/short circuit protective device in series may tend overlap and under certain conditions both may attempt to clear the fault. This may occur, for example, when a severe earth fault produces a current of similar magnitude to that under short circuit conditions, or when an earth fault and short circuit occur simultaneously. Another possible cause is the inherent out of balance in the primary windings of the balance transformer causing the RCCB to trip. Care is, therefore, necessary to be exercised in ensuring that RCCB is coordinated with over current devices.

3.9.2.6 Neutral grounding or failure

Use of RCCBs assumes adequate care in wiring and earthing design. Use of RCCB is not a sole means of affording shuck protection. Attention should be given to bonding and choosing the light cross-sectional area of the conductors, specially the protective conductor. Different types of RCCBs in different circuits may react differently to the presence of a neutral to earth fault on the load side. Such a fault together with the earthing of the supply at the neutral point will constitute a shunt across the neutral winding on the RCCB transformer. Consequently a part of the neutral load current will be shunted away and this may result in the device tripping. On the other hand, the shunting may result in reduced sensitivity and prevent its tripping in general. Therefore, care should be taken to avoid neutral to ground fault when RCCBs are in use. In the event of the neutral failure on the supply side, the RCCB should either open automatically, or is of such a design that it remains functional.

3.9.3 Guidelines for specific occupancies or locations

3.9.3.1 Household and similar installations

The rated tripping current of RCCBs for use in household and similar installation shall not exceed) 30 mA. Use of devices with intentional time delay is not recommended.

3.9.3.2 Locations containing bath tub/shower basin and swimming pools

Where socket outlets and other appliances are to be protected by RCCB, the rated tripping current shall not exceed 30 mA.

3.9.3.3 Where individual socket outlets are required to be protected by RCCB, the rated tripping current shall not exceed 30 mA.

3.9.3.4 Industrial installations

For industrial installations, use of RCCB would be dependent upon already available devices capable of offering protection against harmful earth leakages. For example, use of a separate RCCB may not be necessary for installations equipped with protective devices with in built releases initiating trip signals due to harmful earth leakages. Similarly, individual or group of motors otherwise adequately protected need not be provided additional protection through RCCB.

3.9.3.5 Data processing installations / industrial control / telecommunication equipment

Radio frequency interference suppression filters fitted to these equipment may produce high earth leakages. Failure of the protective earth connection may cause a dangerous touch voltage. Use of RCCBs under such circumstances should be carefully considered owing to their frequent tripping, besides capacitor charging currents at switching on shall have to be considered. Under such circumstances, where leakages exceed 10 mA, one of the three measures given below may be necessary:

a) Use of high integrity protective earth circuits by robust or duplicate conductors,

b) Earth continuity monitoring or provision for automatic disconnection when earth continuity fails, or

c) Use of double wound transformers to enable localization path of leakage and minimize the possibility of breakages.

3.9.3.6 The presence of generating sets within an installation may change the conditions of application of RCCB. The contribution to the prospective short circuit current by the generating set should be taken into account.

3.9.3.7 Medical establishment and electrical installations in hazardous locations

The use of RCCB and their selection in such installations has to be carefully considered. Reference is invited to SP: 30-1984, "National Electrical Code".

4. EXHAUST FANS

4.1 Exhaust fans shall conform to relevant Indian Standards.

4.2 Exhaust fans shall be erected at the places indicated by the Engineer. For fixing an exhaust fan, a circular opening shall be provided in the wall to suit the size of the frame, which shall be fixed by means of rag bolts embedded in the wall. The hole shall be neatly plastered to the original finish of the wall. The exhaust fan shall be connected to the exhaust fan point, which shall be wired as near to the opening as possible, by means of a flexible cord, care being taken to see that the blades rotate in the proper direction.

4.3 Exhaust fans for installation in corrosive atmosphere, shall be painted with, special PVC paint or chlorinated rubber paint.

4.4 Installation of exhaust fans in kitchens, dark rooms and such other special locations need careful consideration; any special provisions needed shall be specified.

5. LIGHTING FIXTURES

All lighting fixtures shall comply with the energy efficiency and energy conservation norms, and shall be of the types like CFL, FTL (T5), etc. of the approved make and quality, and as directed by the Engineer.

6. BOREWELL WITH ELECTRIC MOTOR DRIVEN PUMP

As directed by the Engineer including the location of the borewell and specifications instructed, the Contractor shall undertake the construction of a borewell installed with an external electric motor driven pump of instructed capacity with proper caging and top cover/shade etc. complete with the necessary G.I. medium grade pipe mains / distribution connections / fittings of specified size to the main water supply polyethylene water storage tanks and also providing point outlets with wheel valves provided for later connection to the site.

The overall performance of this water supply mechanism shall be such so as to ensure that a continuous water supply from the borewell to the above-mentioned main water supply polyethylene water storage tanks and through the distribution systems of the premises/building.

7. SAFETY PROCEDURES

7.1 The detailed instructions on safety procedures given in B.I.S. Code No. 5216-1982 "Code of Safety Procedures and Practices in Electrical Works" shall be strictly followed.

Fig. 1: Close and Open Planking and Strutting

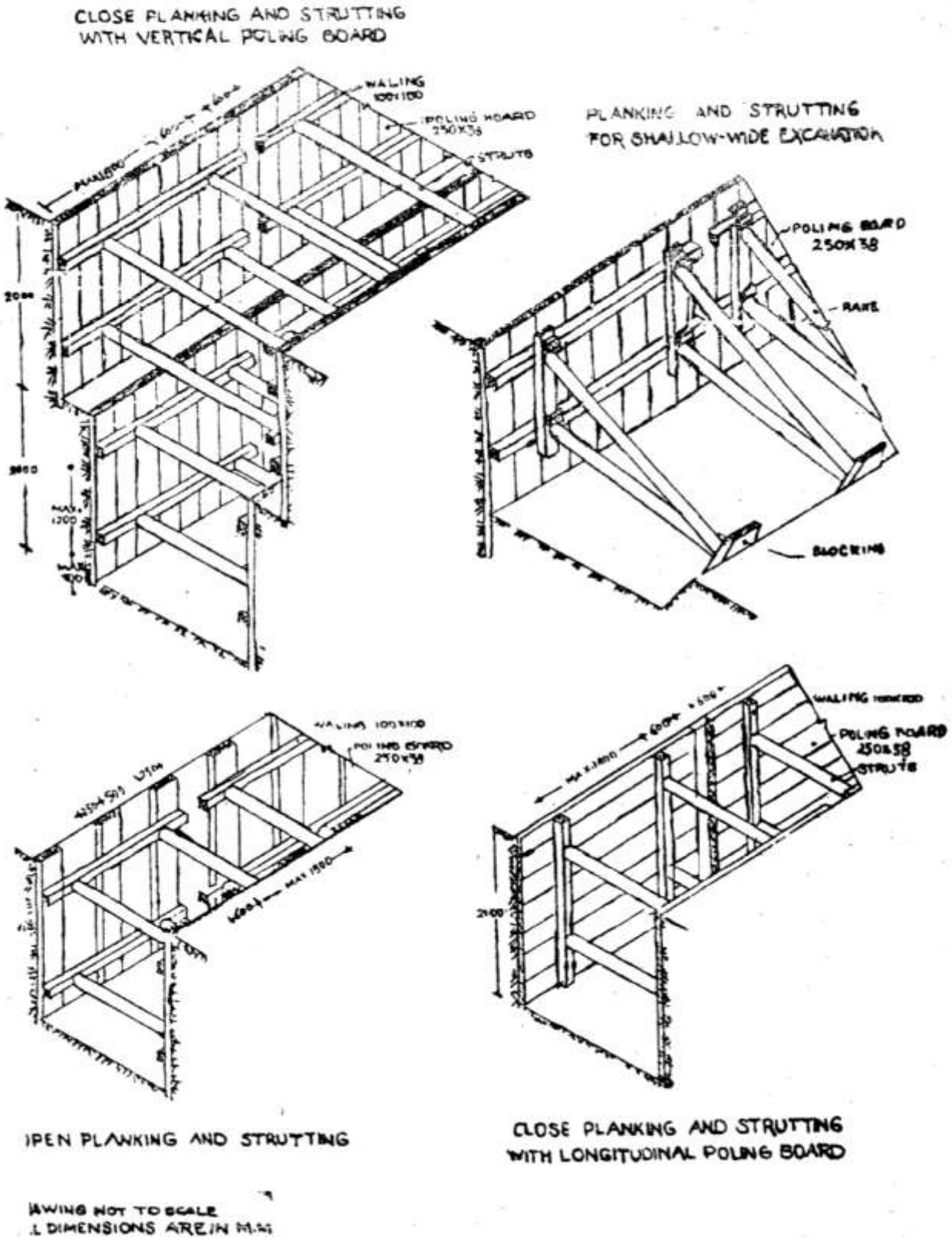

Fig. 2: Arrangement of Ties and Spreaders

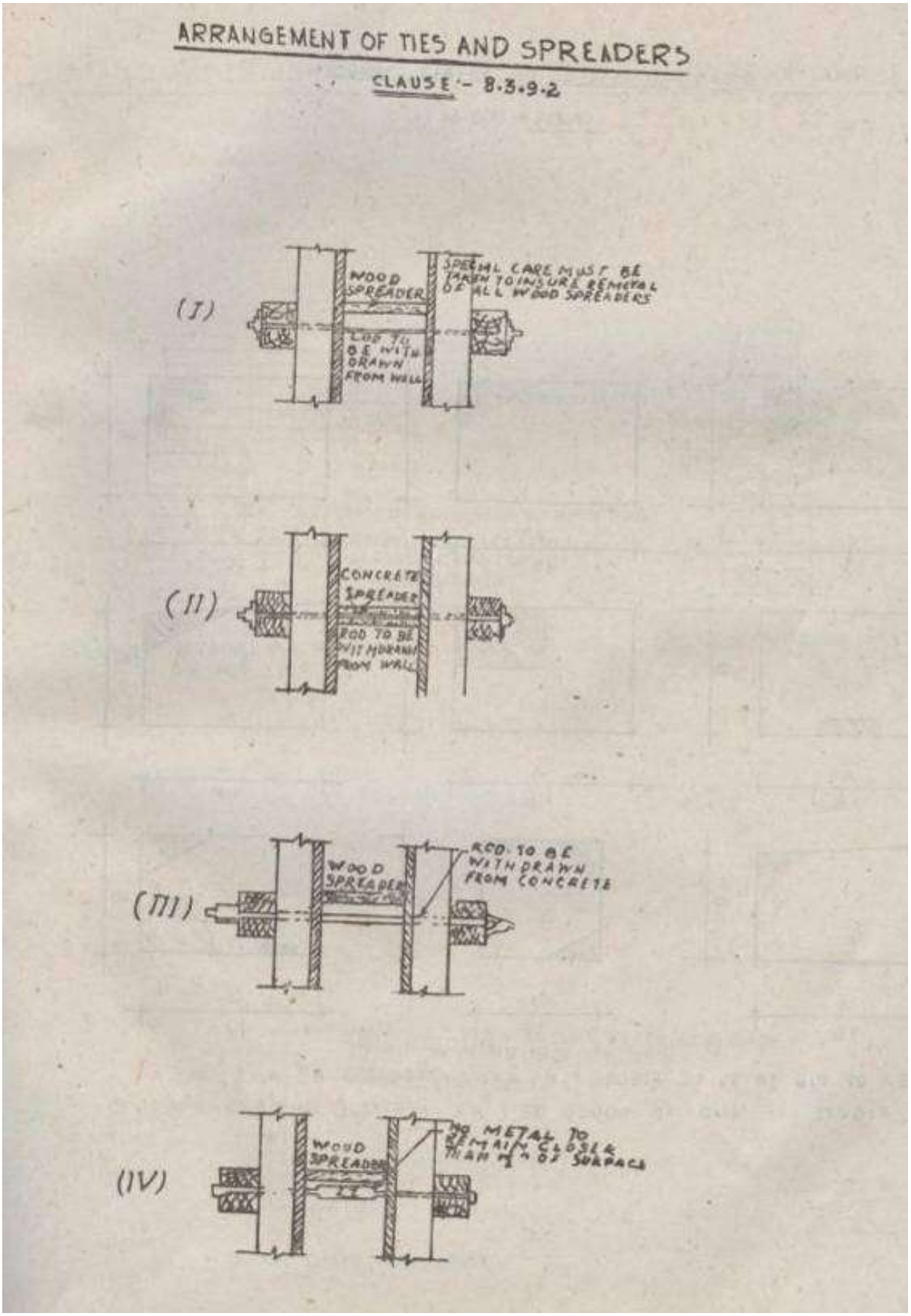

Fig. 3: Vee Bee Consistometer and Relationship between Slump in cm and the Degrees covered by the consistency scale

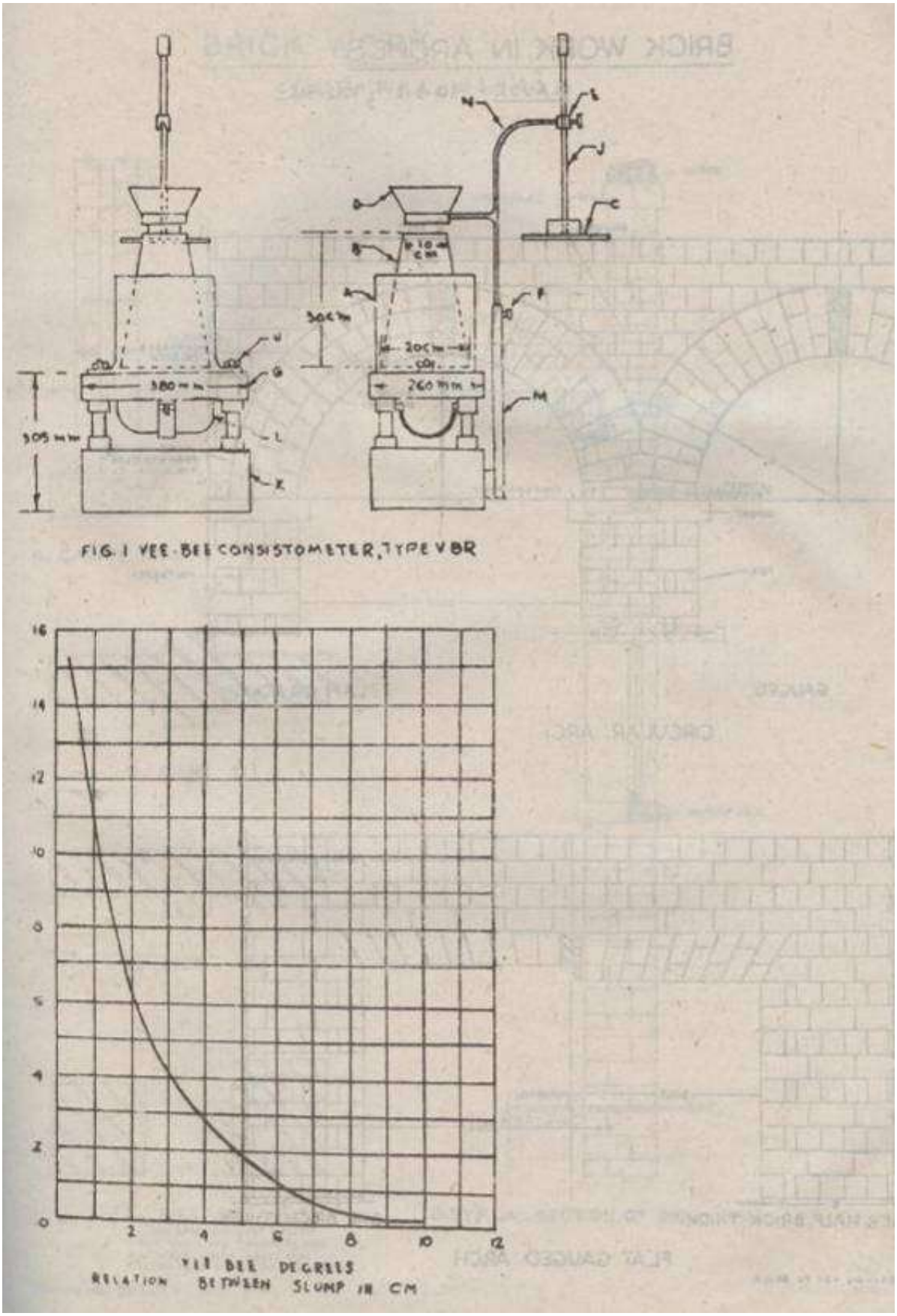

Fig. 4: Measurement of Small Voids

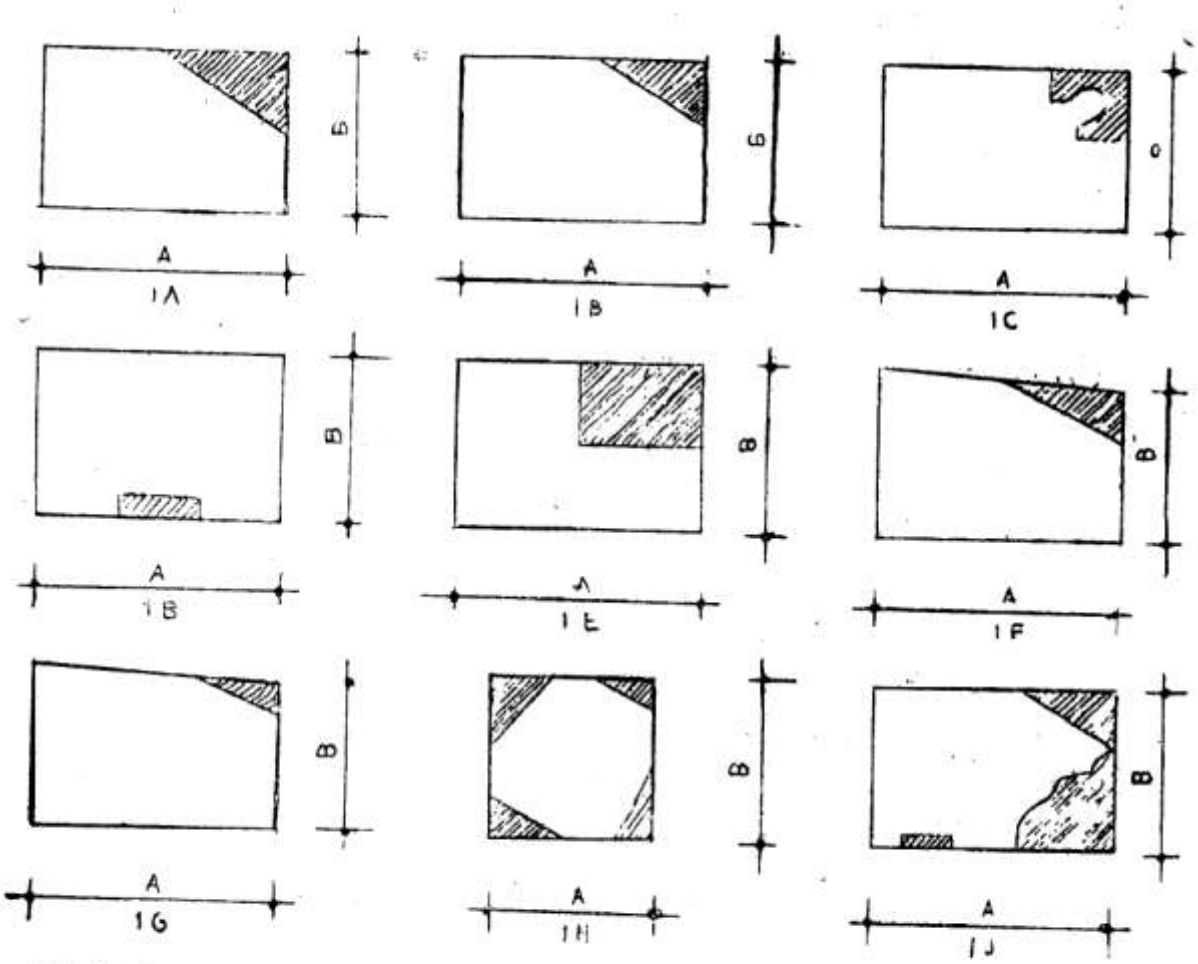

AREA OF FIG 1A TO 1E FIGURE 1H AND 1J WOULD BE AXB, AREA OF FIGURE 1F AND 1G WOULD BE / AX AVERAGE OF B AND B'

Fig. 5: Details of Typical Construction Joints

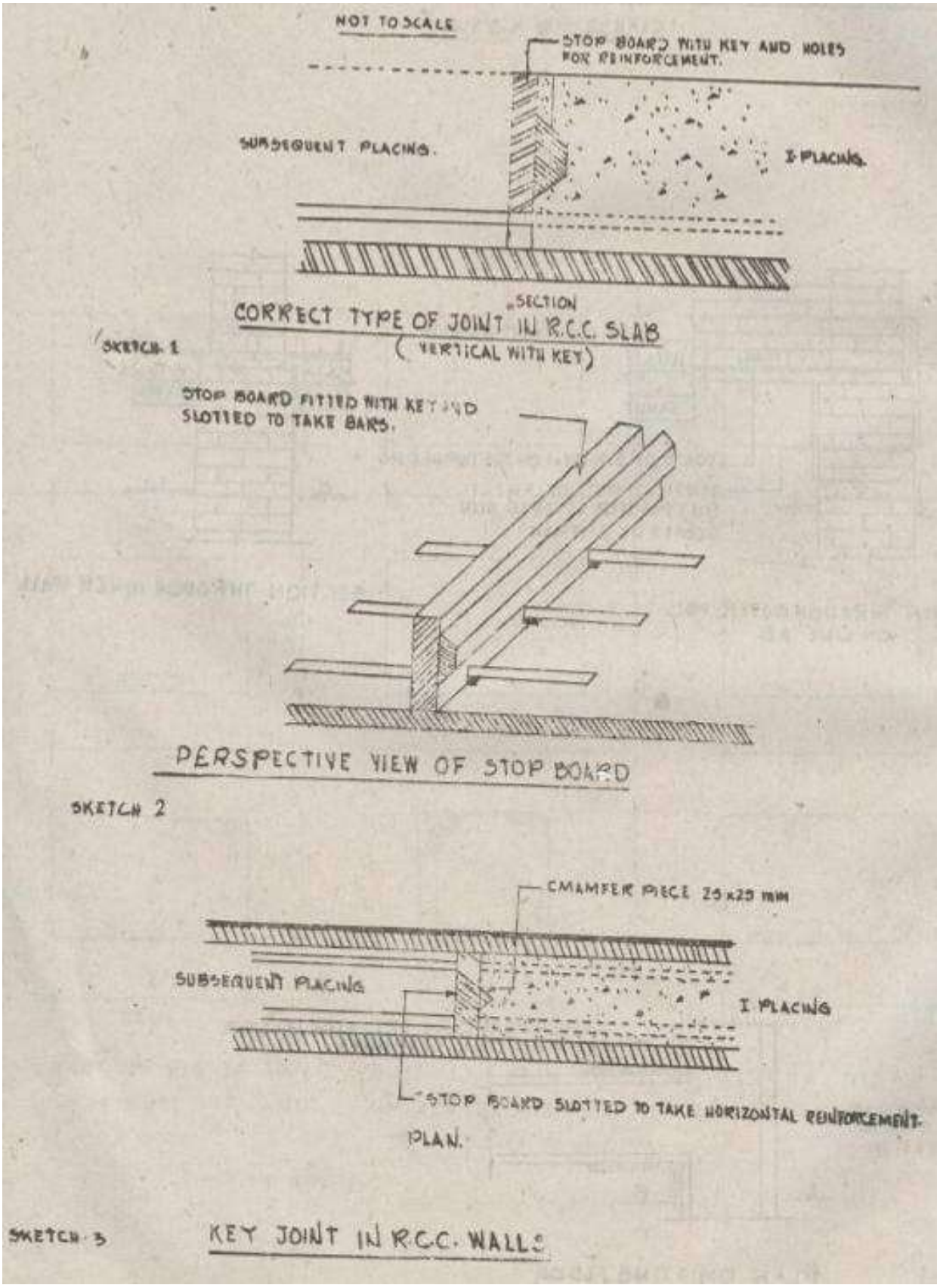

Fig. 6: Expansion Joints

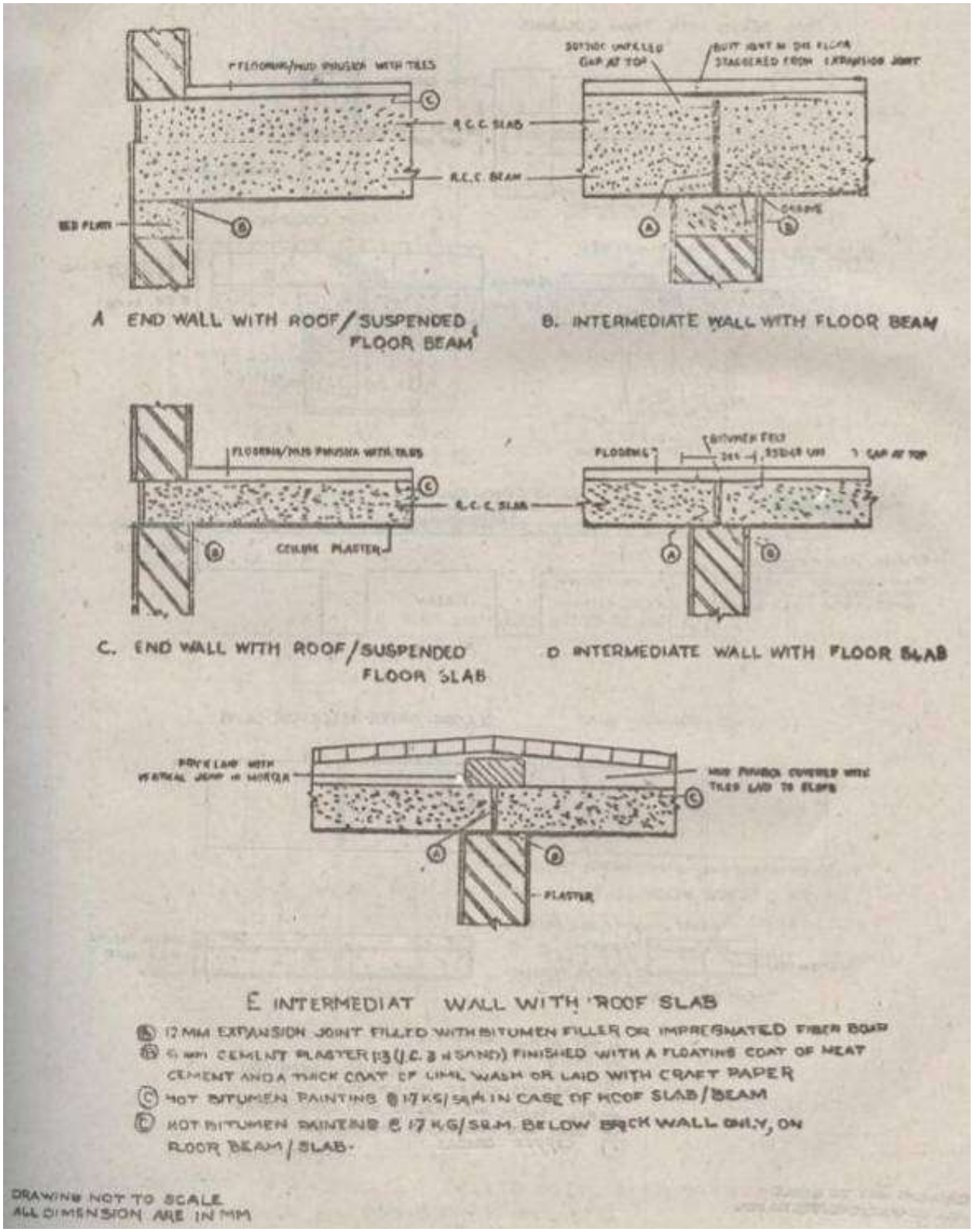

Fig. 6 (contd): Expansion Joints

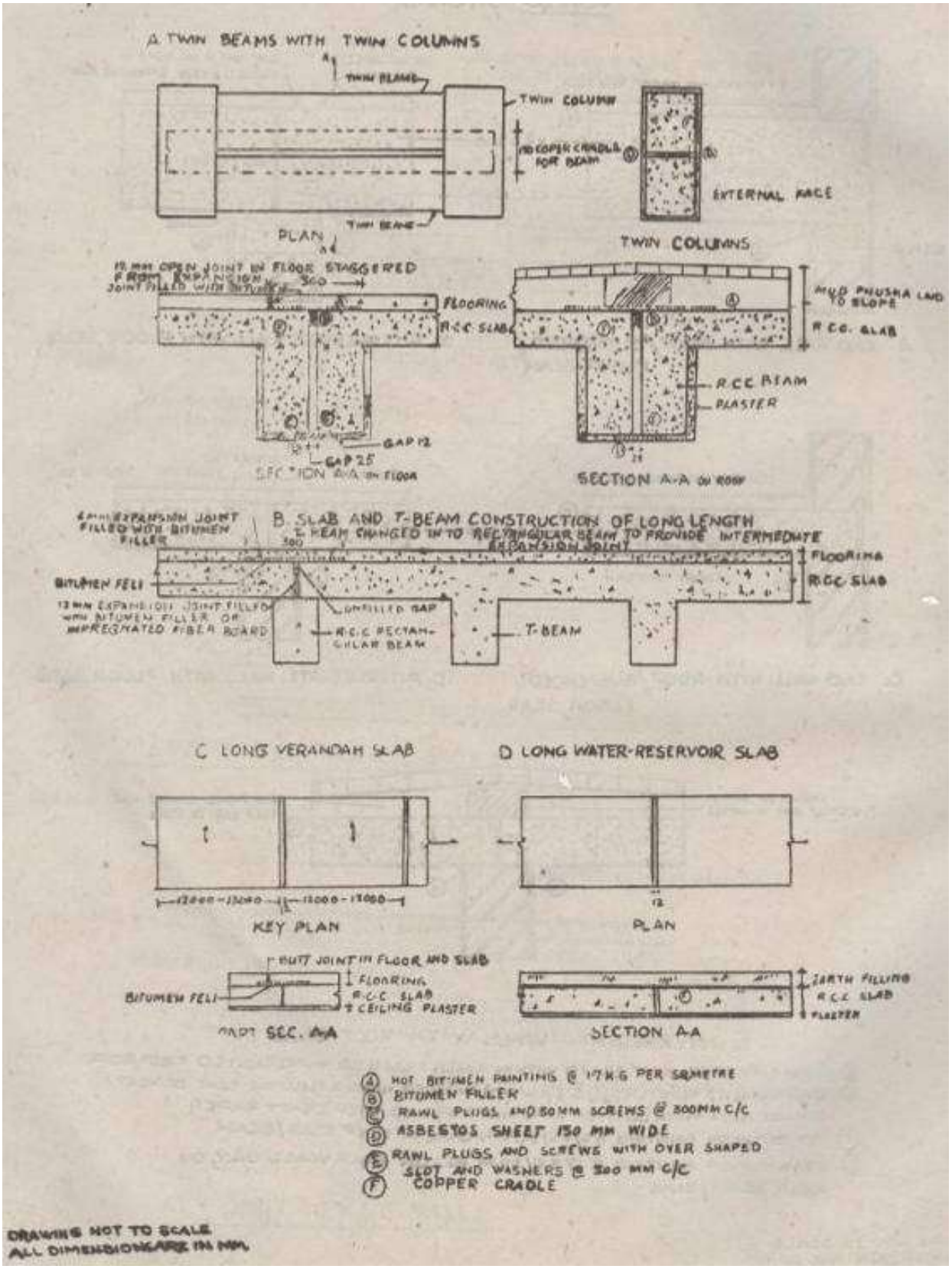

Fig. 7: Stone Masonry – Polygonal Rubble Uncoursed and Polygonal Rubble Brought to Courses

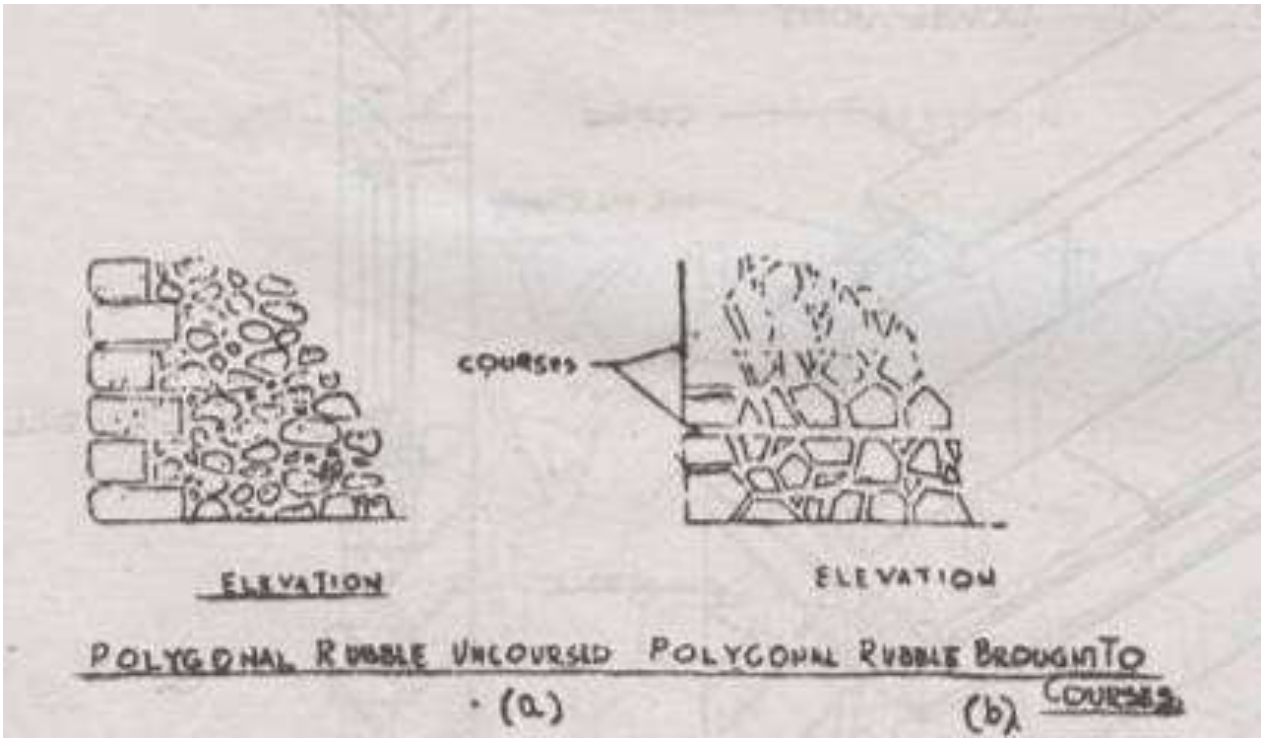

Fig. 8: Stone Masonry – Uncoursed Rubble/Random Rubble/Polygonal Rubble Masonry, Coursed Rubble Masonry, and Ashlar Masonry

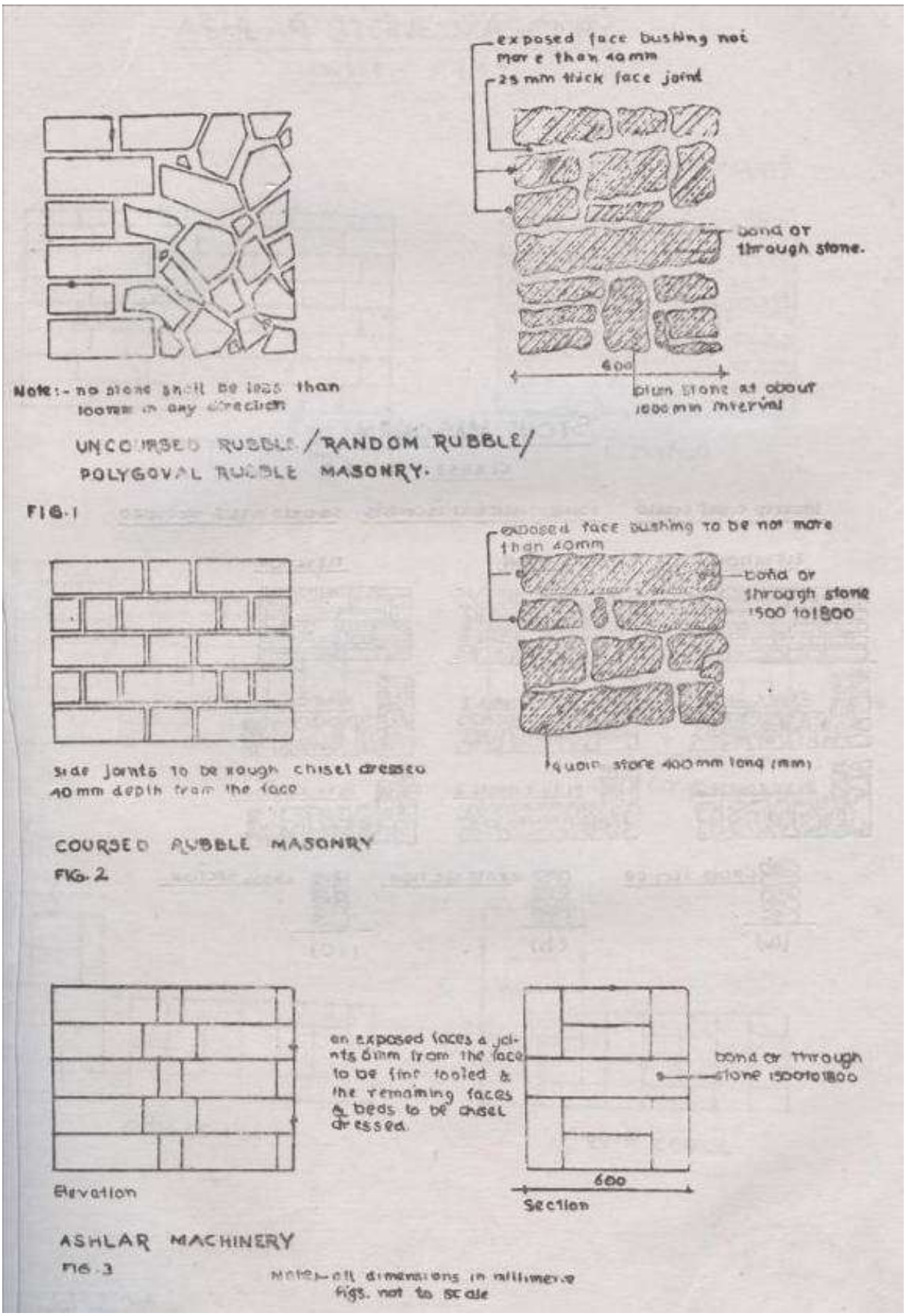

Fig. 9: Stone Masonry

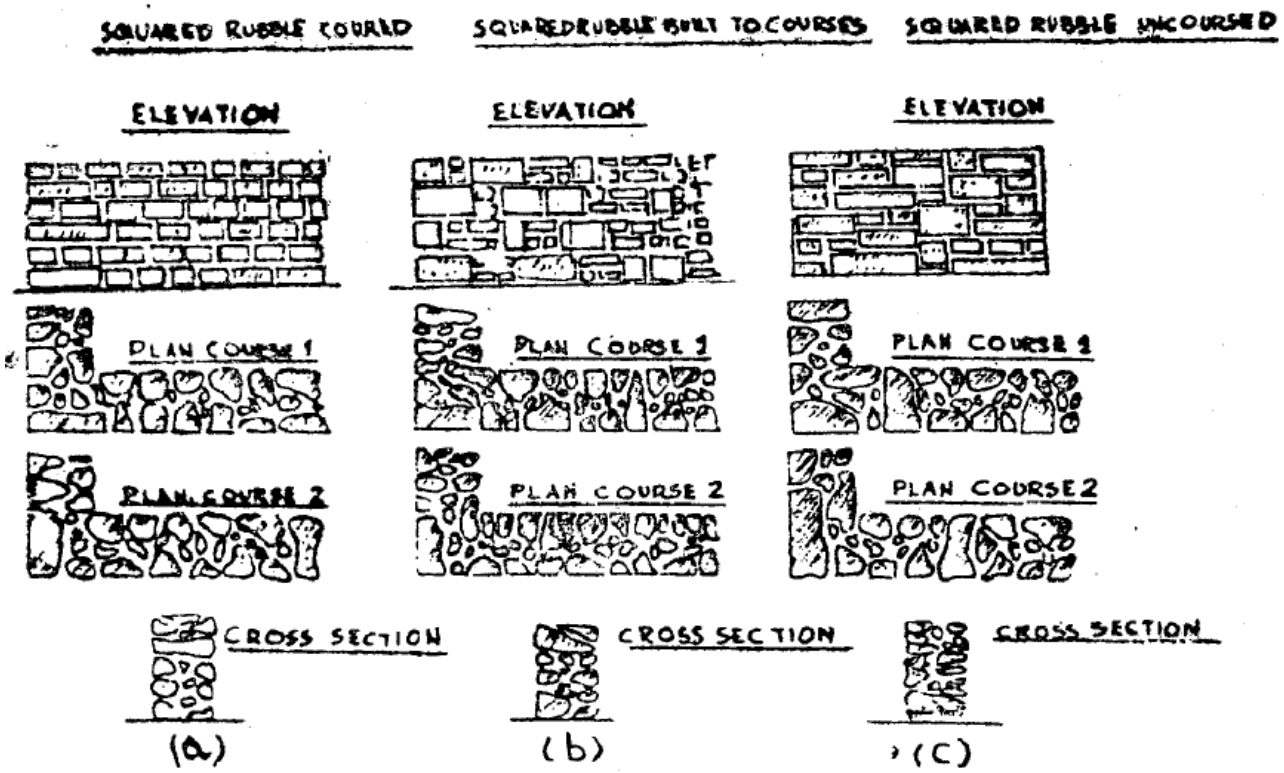

Fig. 10: Ashlar Stone Masonry

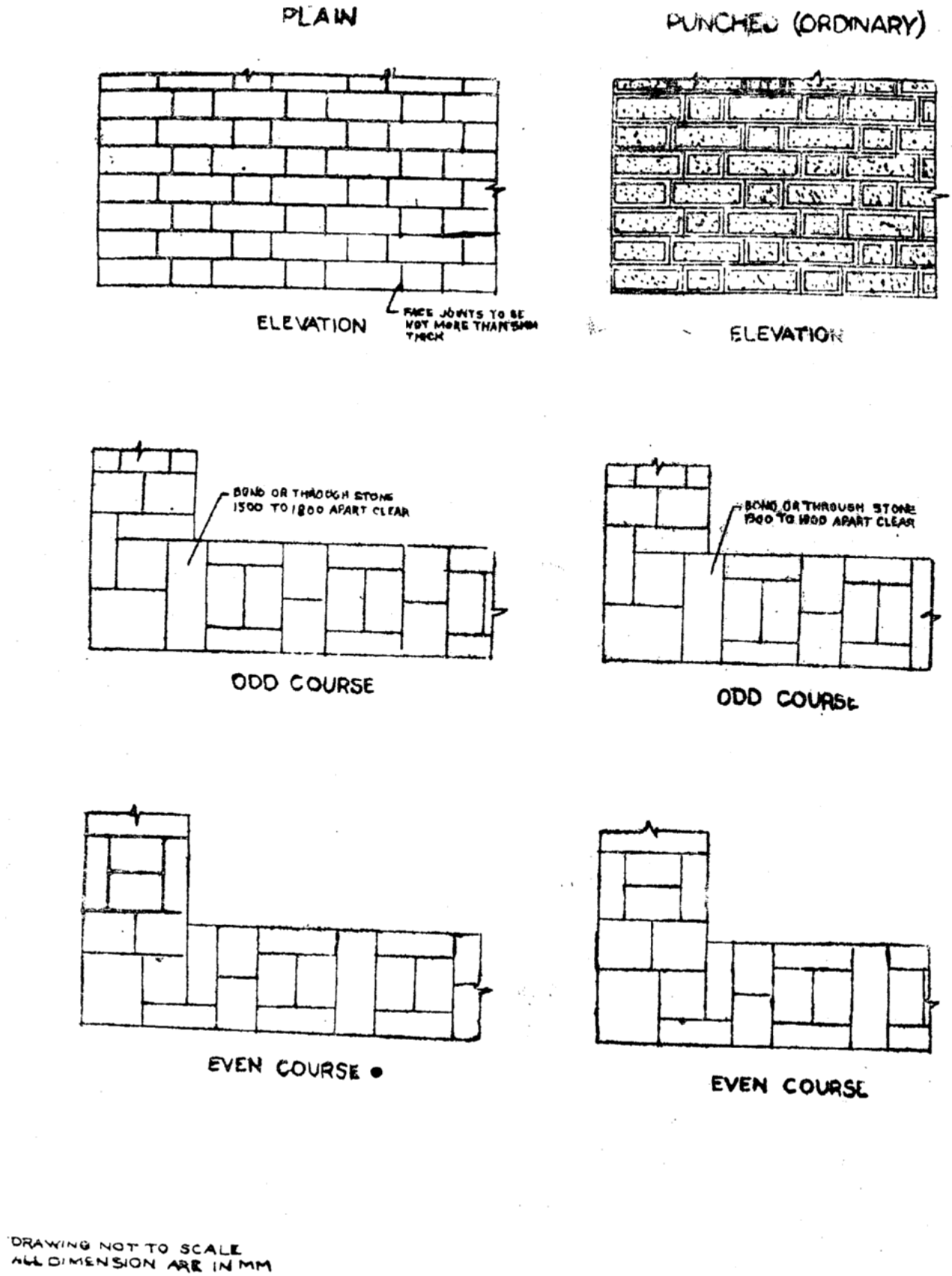

Fig. 11: Stone Work – Moulded, Sunk, Carved

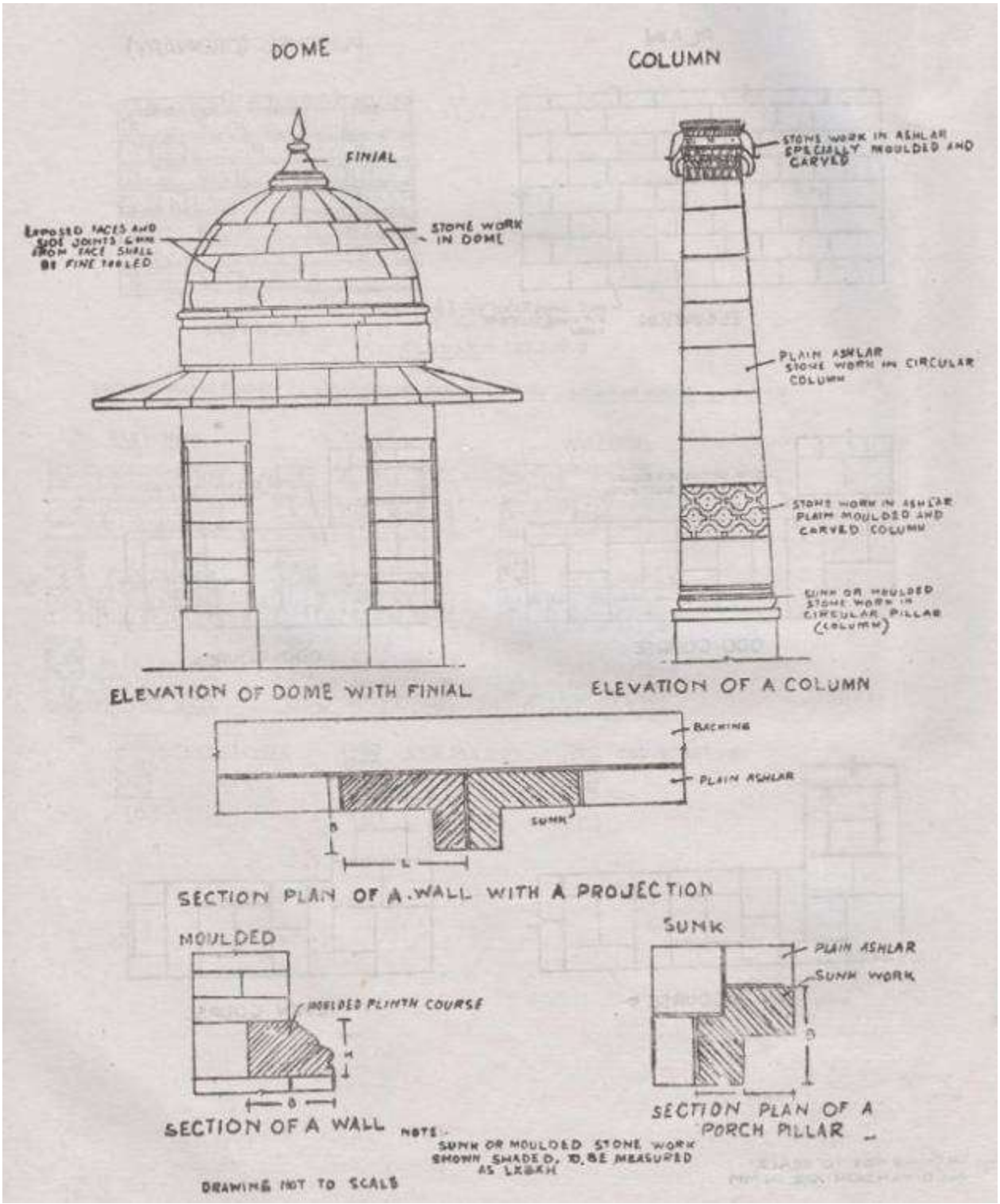

Fig. 12: Stone Work - Arch Types

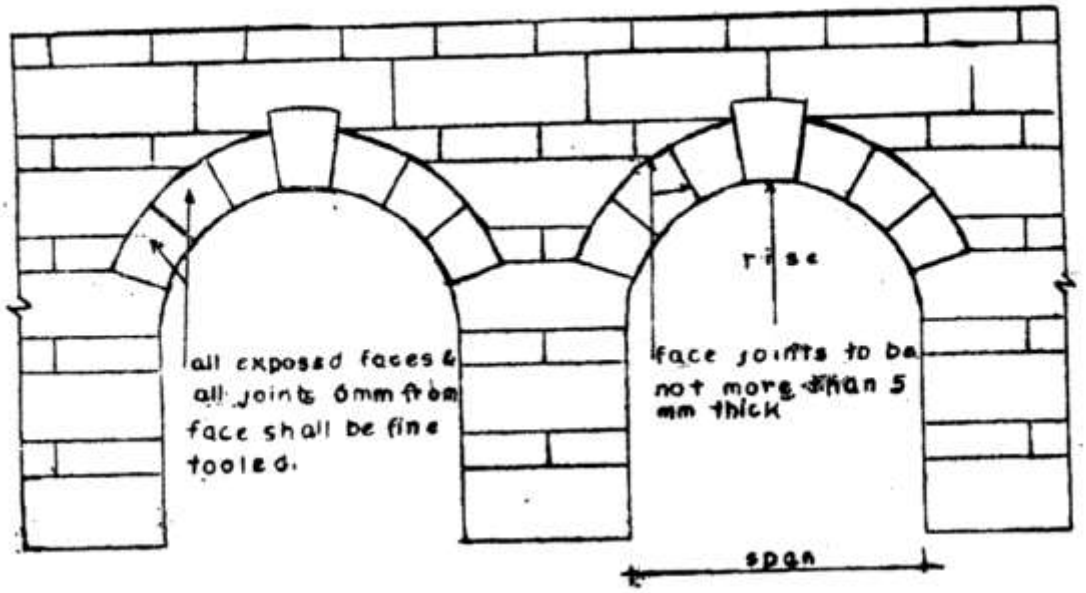

Note :- The dressed surface shall not be more than 3mm

SKETCH-1

SEMI CIRCULAR ARCH

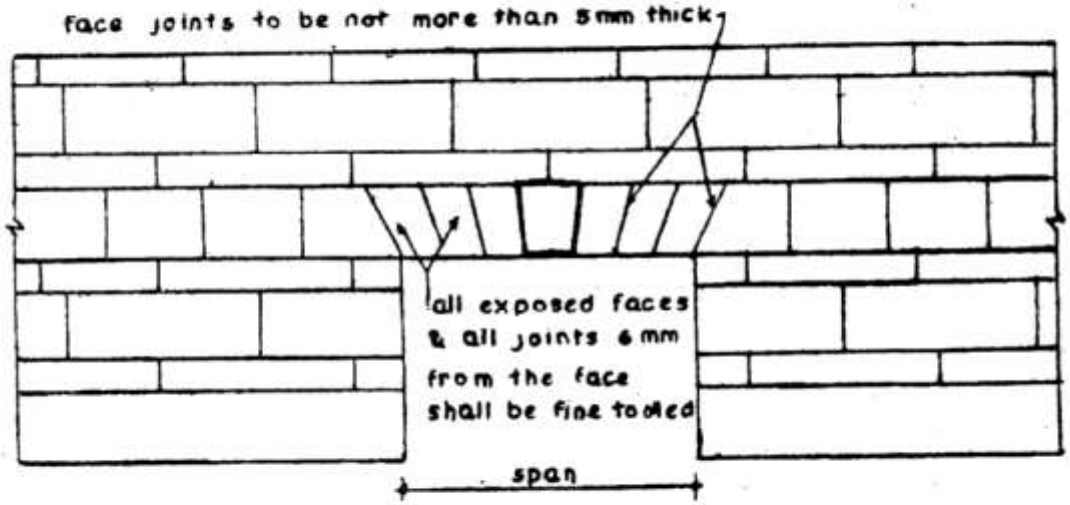

Note :- All other details shall be same as for plain ashlar cyclopean

SKETCH-2

FLAT ARCH

DRAWING NOT TO SCALE
ALL DIMENSIONS ARE IN MM

Fig. 13: Details of Fixing Stone Veneer Work

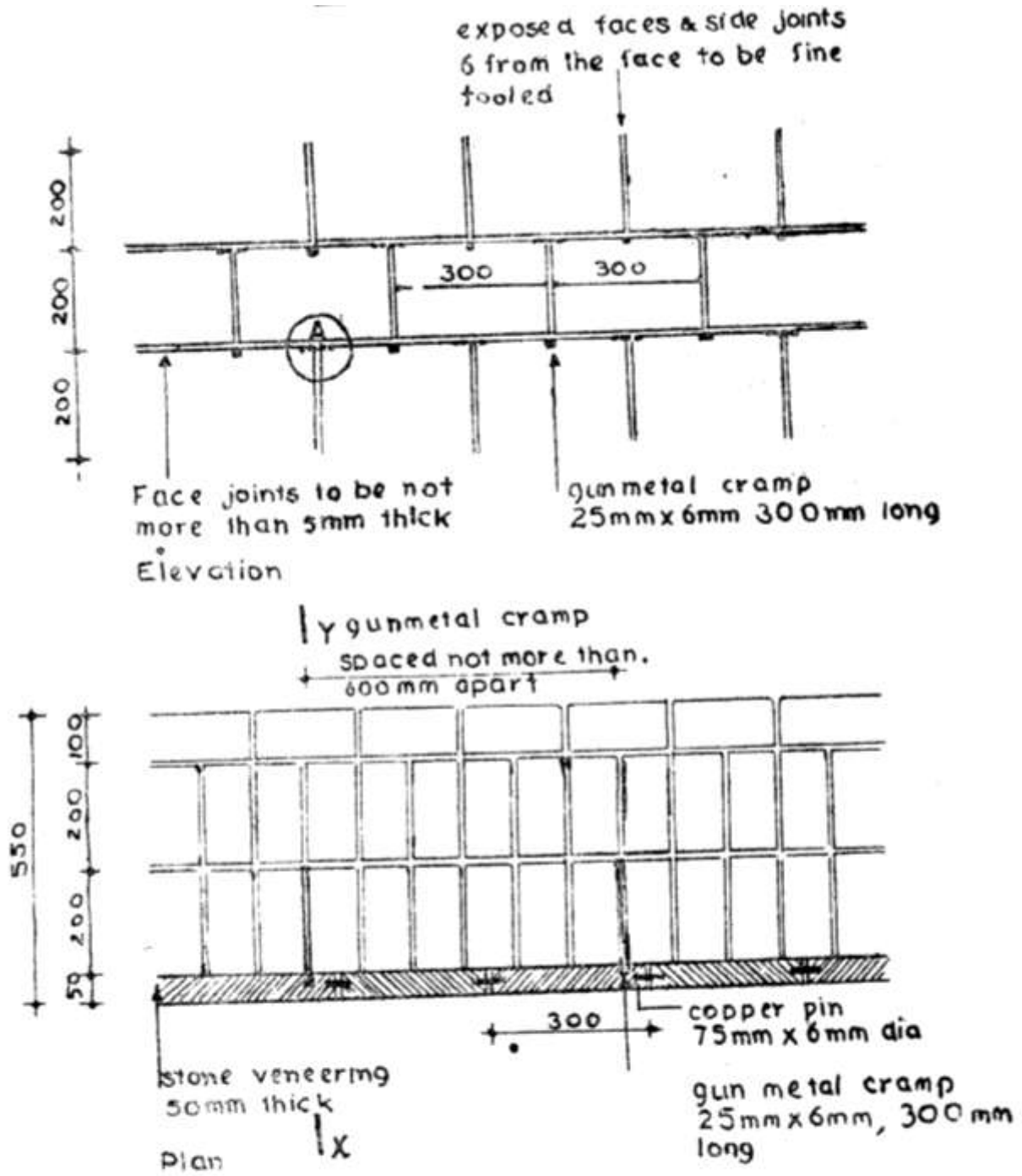

FIG 5

Note:- all dimensions in millimetre
figs not to scale

Fig. 13 (contd): Details of Fixing Stone Veneer Work

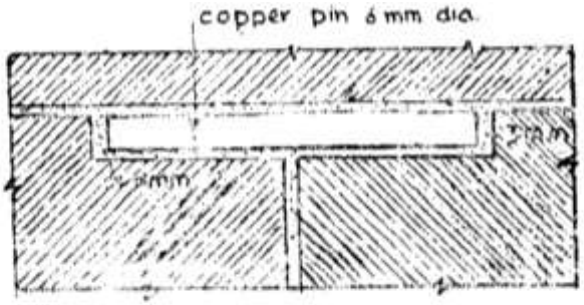

Sectional Elevation

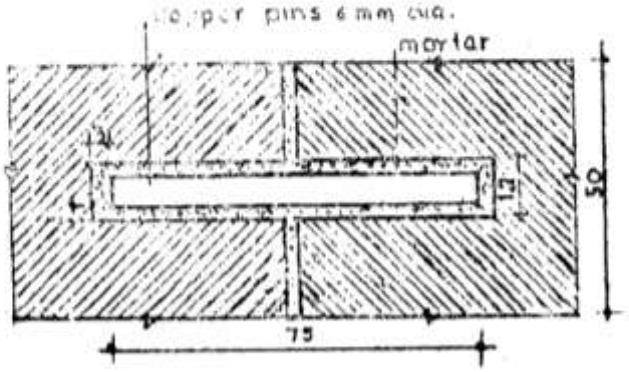

Sectional Plan
Full size details of 'A'

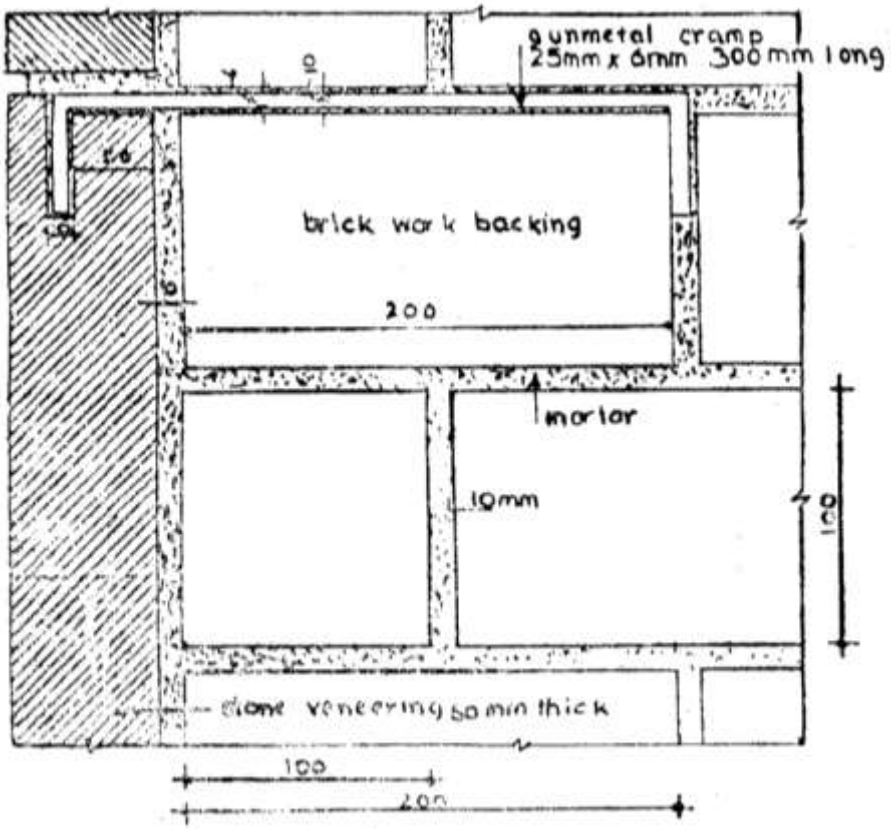

SECTION AT X.Y.

NOTE: all dimensions in millimetre.
figs. not to scale

Fig. 14: Enlarged details at Stone Dowel

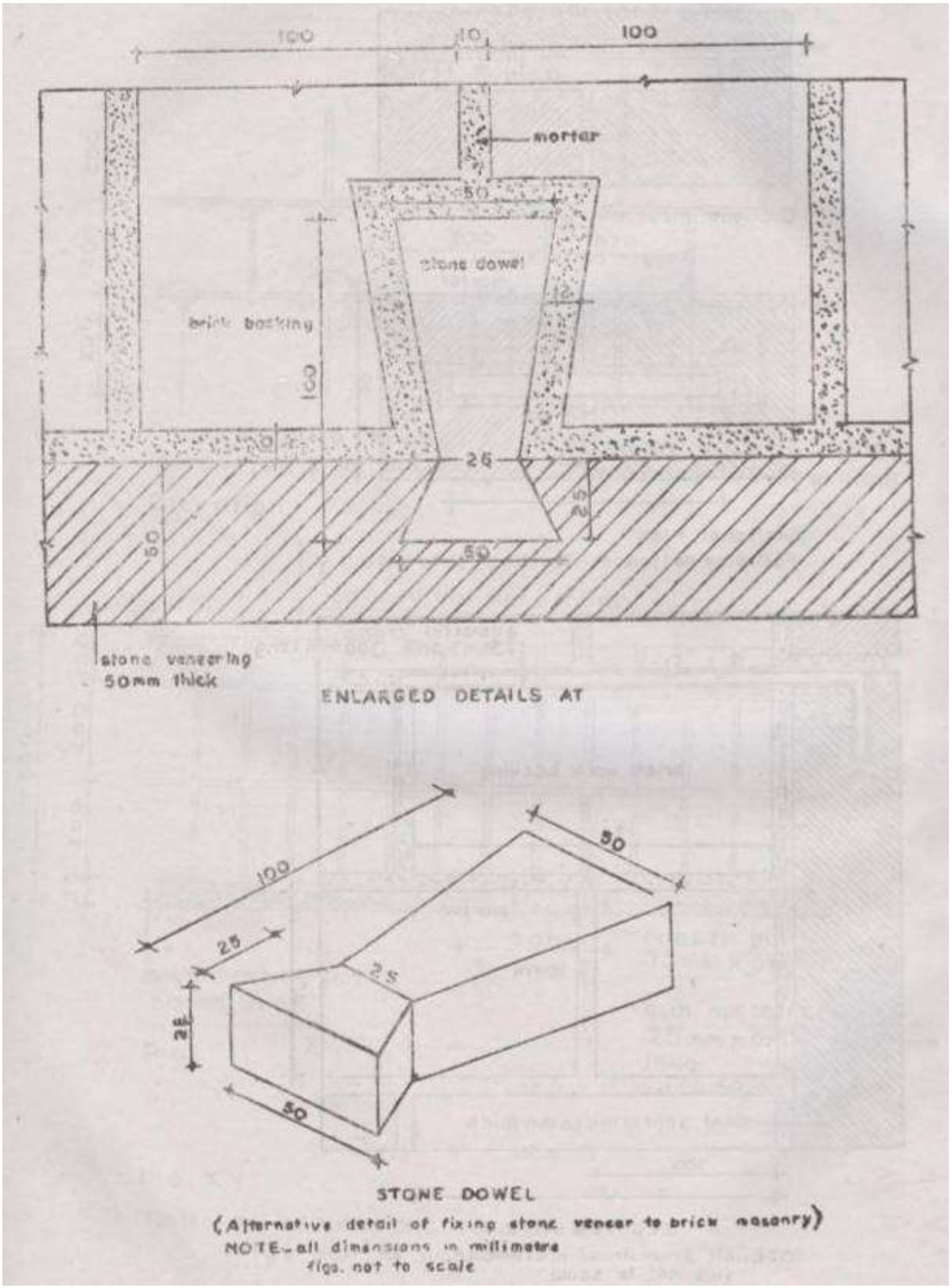

Fig. 15: Brick Work - English Bond

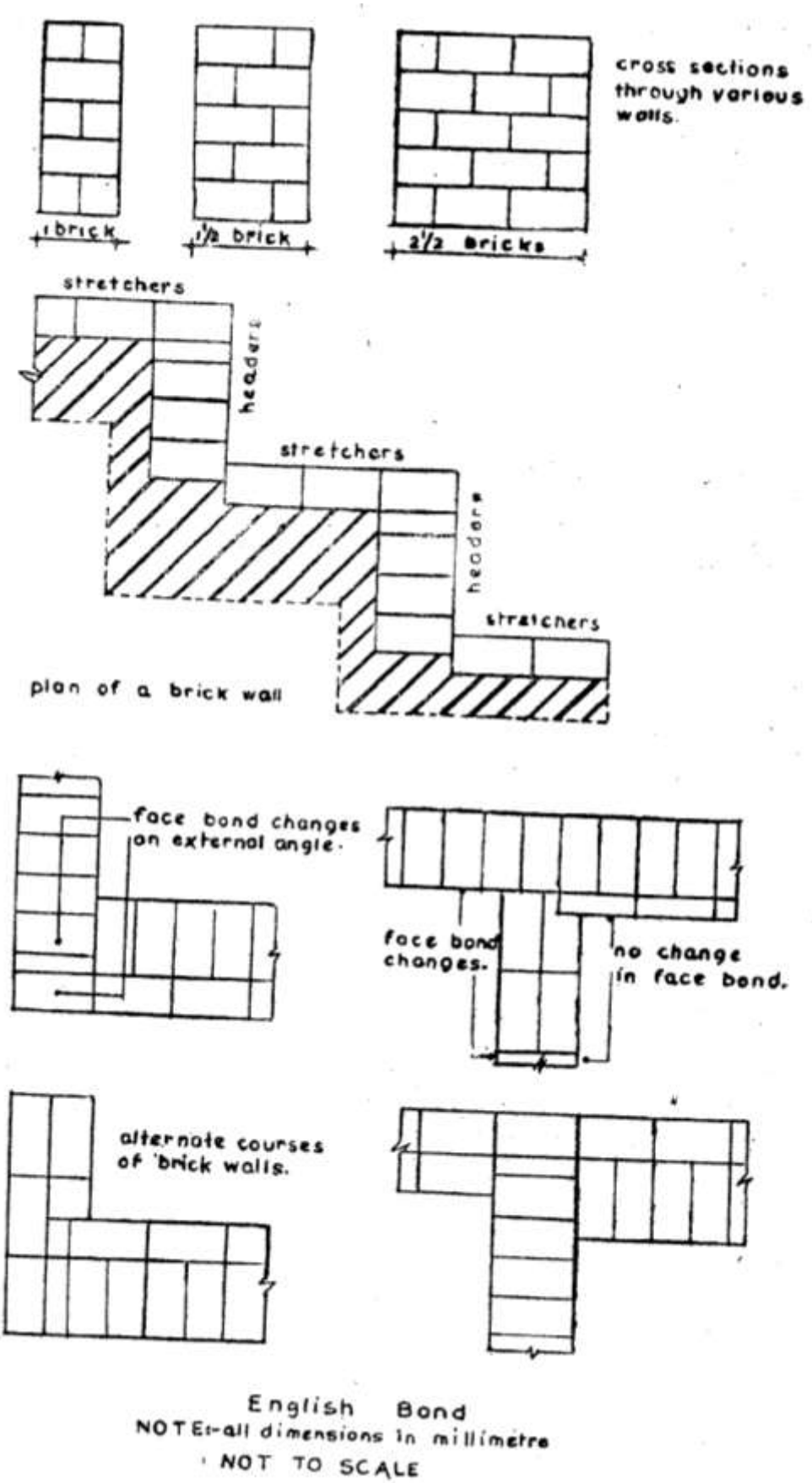

Fig. 16: Brick Drip Course and Joint of Roof with Wall

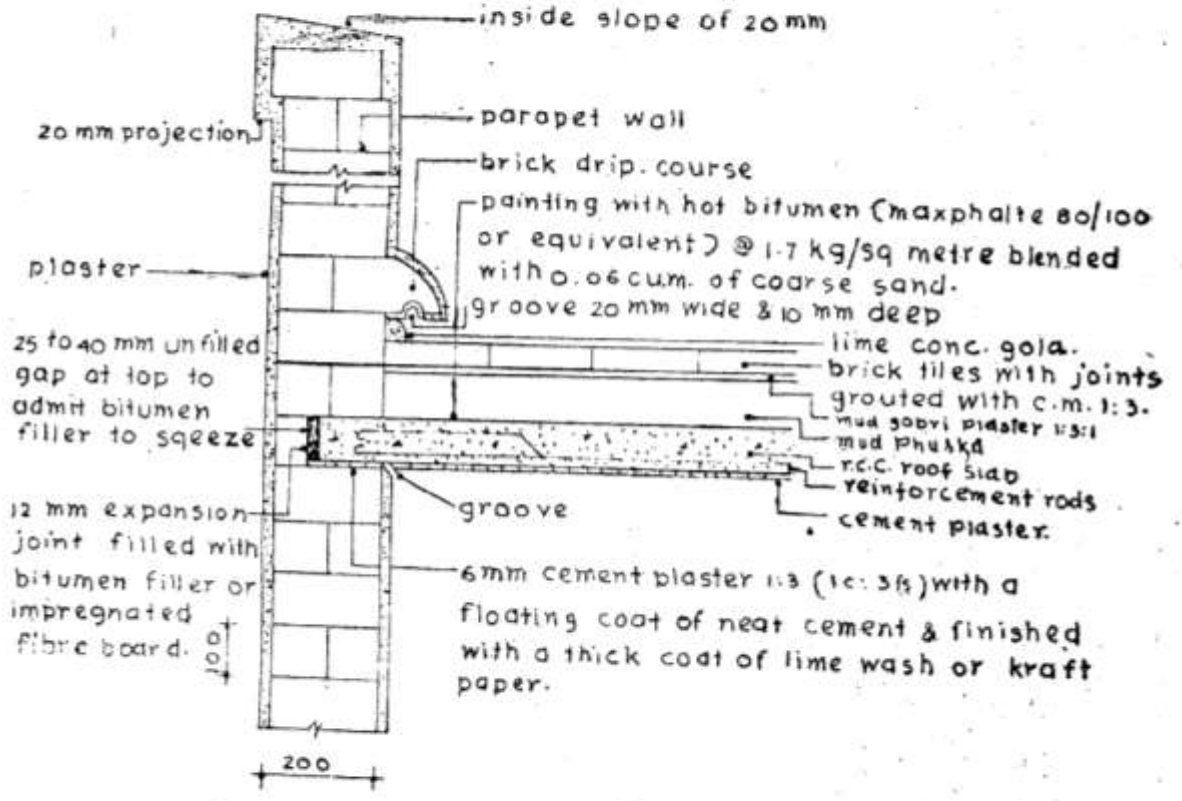

Section at Ridge

Brick Drip Course And Joint of Roof With Wall

NOTE :- all dimensions in millimetre
fig. not to scale

Fig. 17: Brick Work - End Wall with Roof Slab

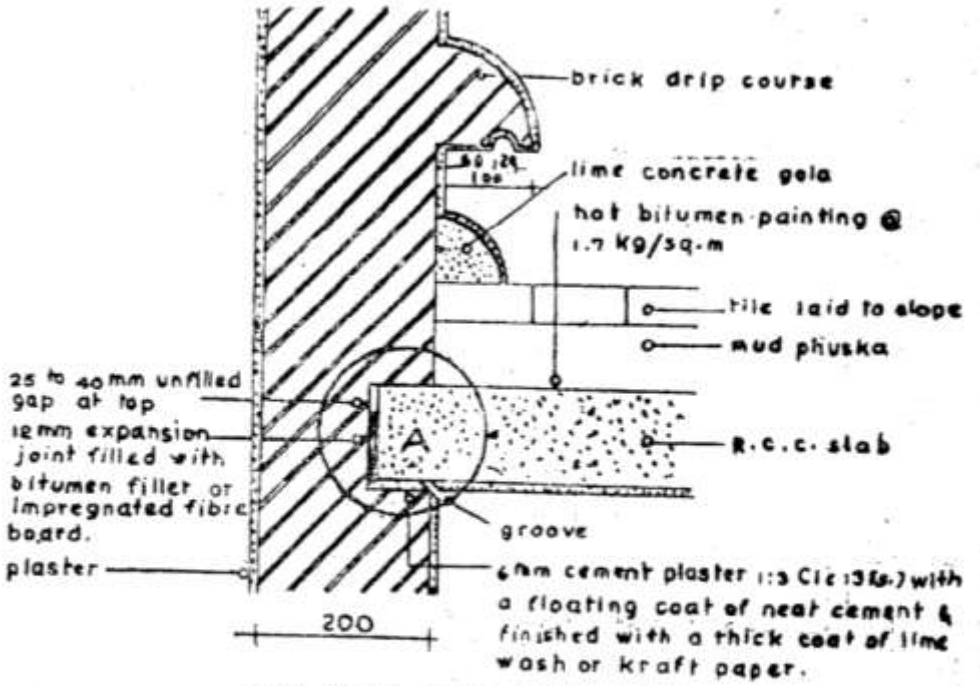

END WALL WITH ROOF SLAB

SKETCH-1

Note:-
all dimensions in millimetre.
fig. not to scale

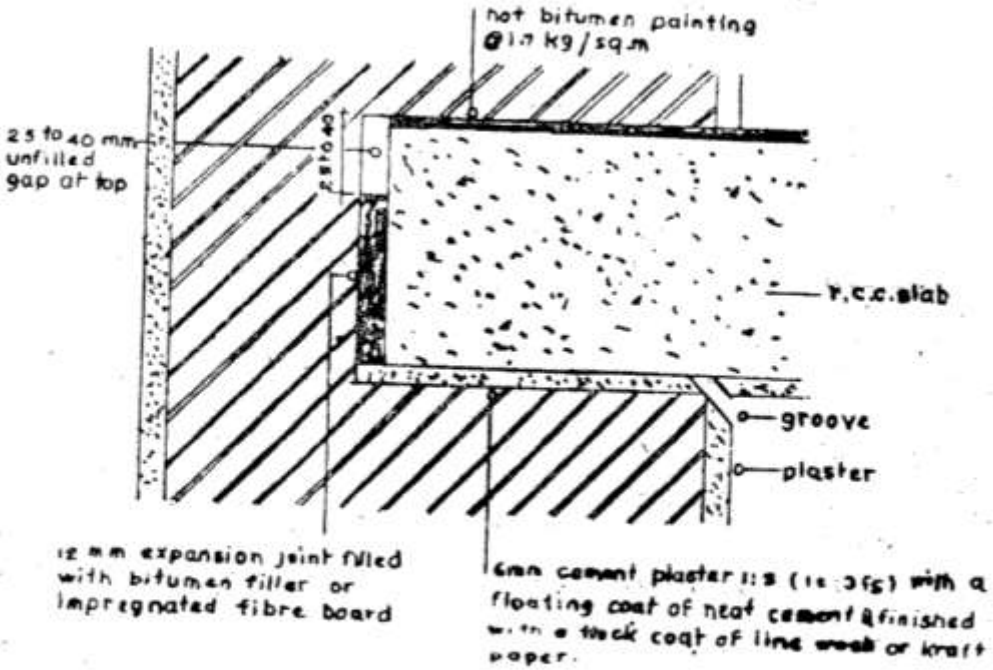

DETAIL AT A

SKETCH 2

NOTE- All dimensions in millimetre
fig not to scale.

Fig. 18: Brick Work - Intermediate Wall with Roof/Floor Slab and Floor Beam

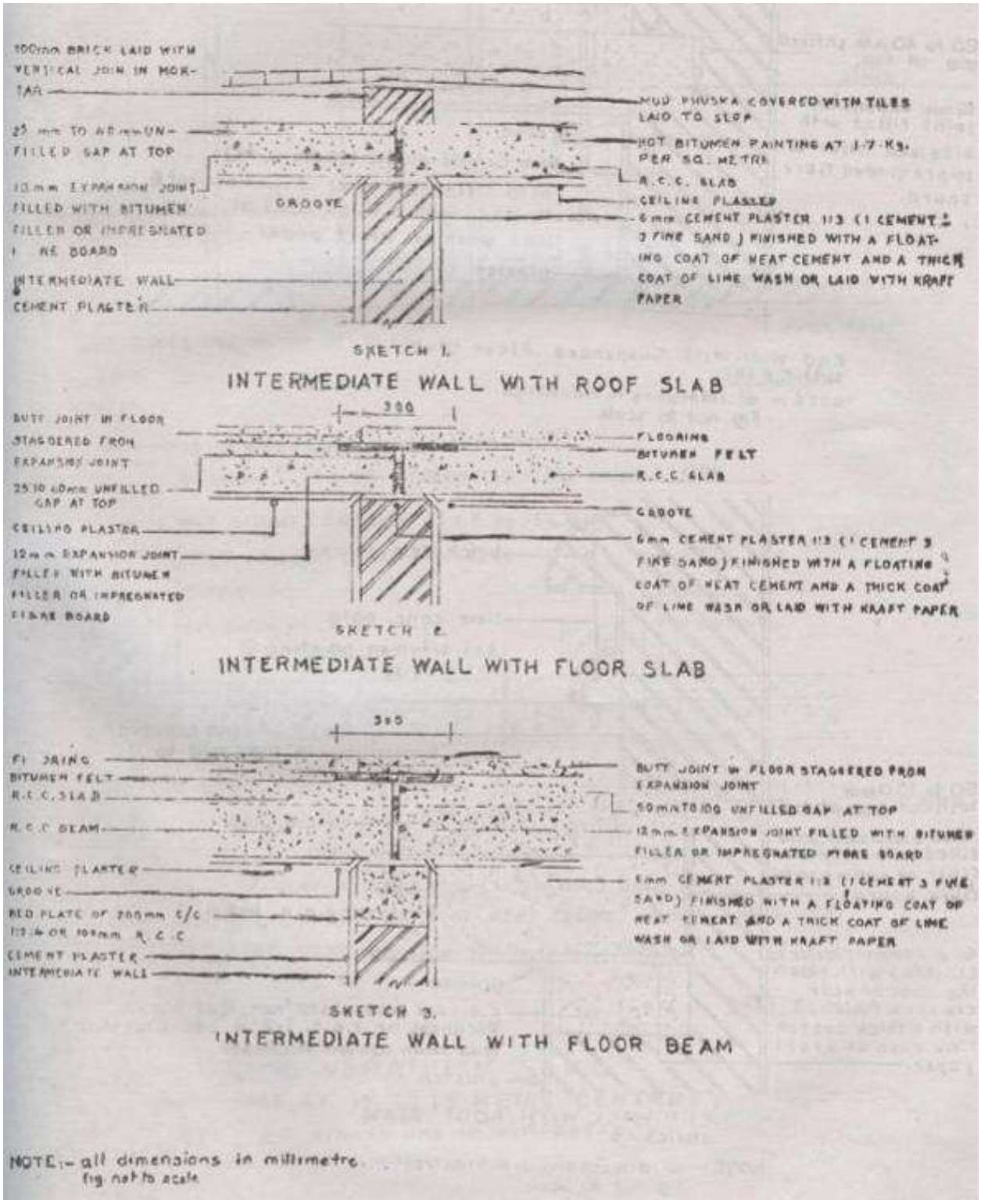

Fig. 19: Brick Work - End Wall with Suspended Floor Slab and Roof Beam

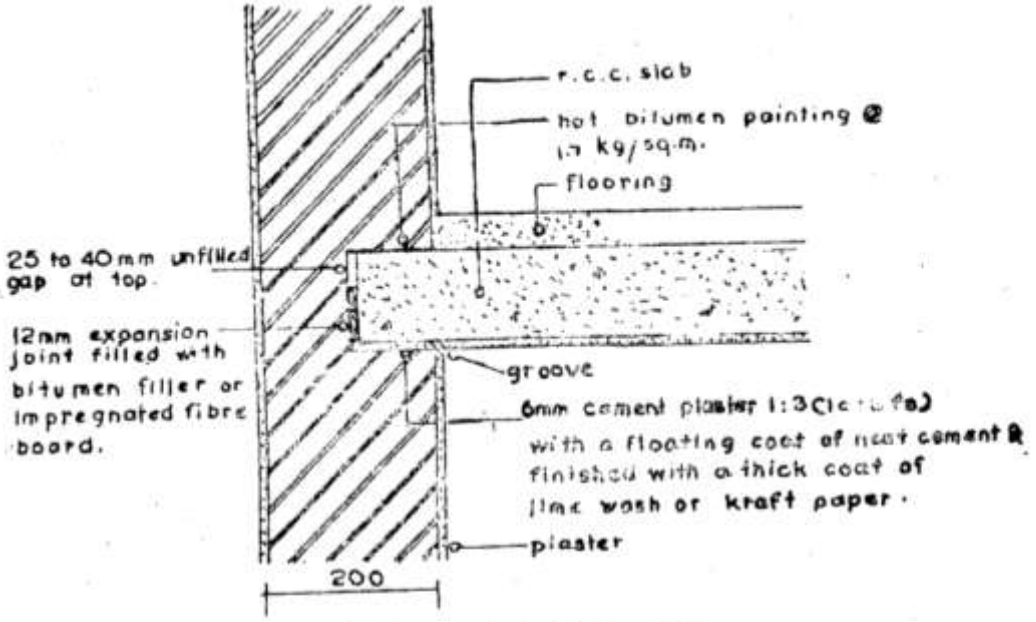

End Wall With Suspended Floor Slab
sketch.1
NOTE :- all dimensions in millimetres.
fig not to scale

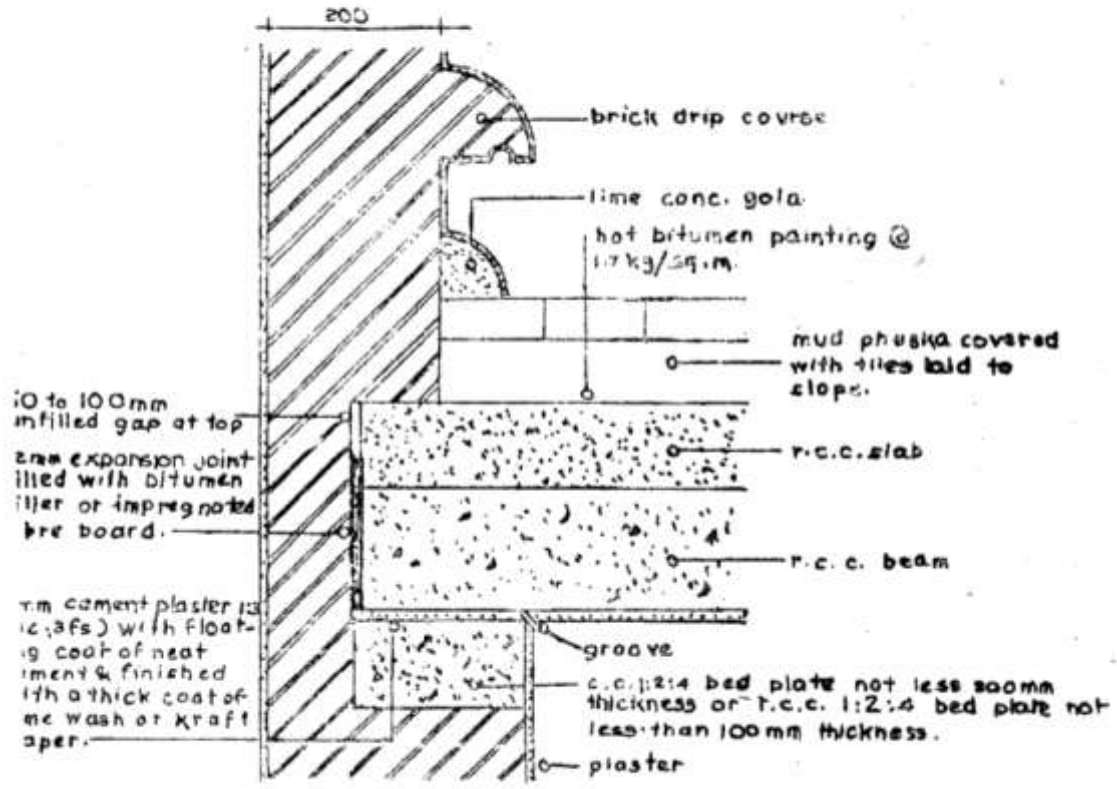

END WALL WITH ROOF BEAM
sketch - 2
NOTE :- all dimensions in millimetre.
fig not to scale

Fig. 20: Brick Work - Long Verandah Slab (Butt Joint at 12 to 13 m Centers)

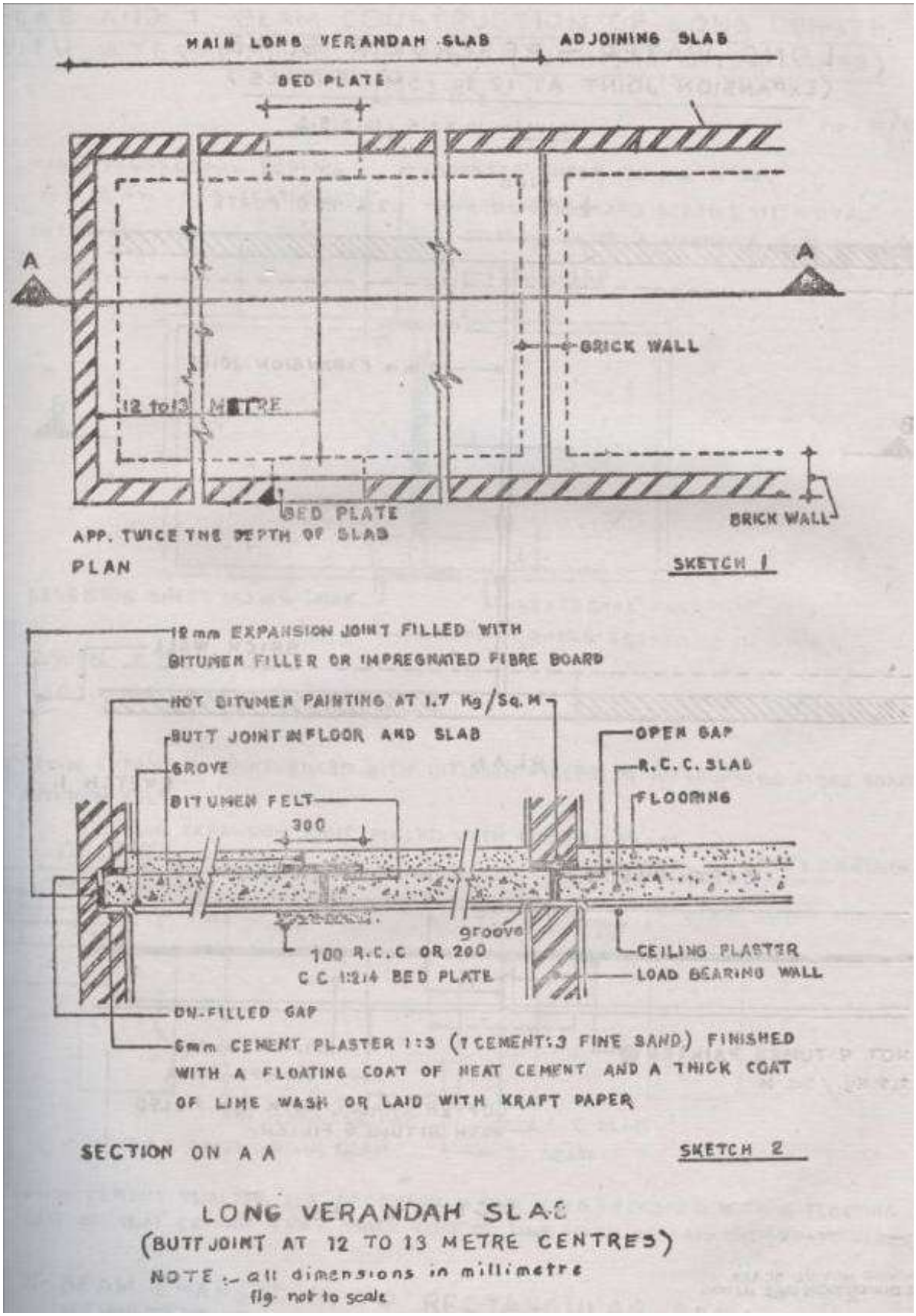

Fig. 21: Slab and T-Beam Construction of Long Length with Intermediate Expansion Joint (12 to 15 m Center)

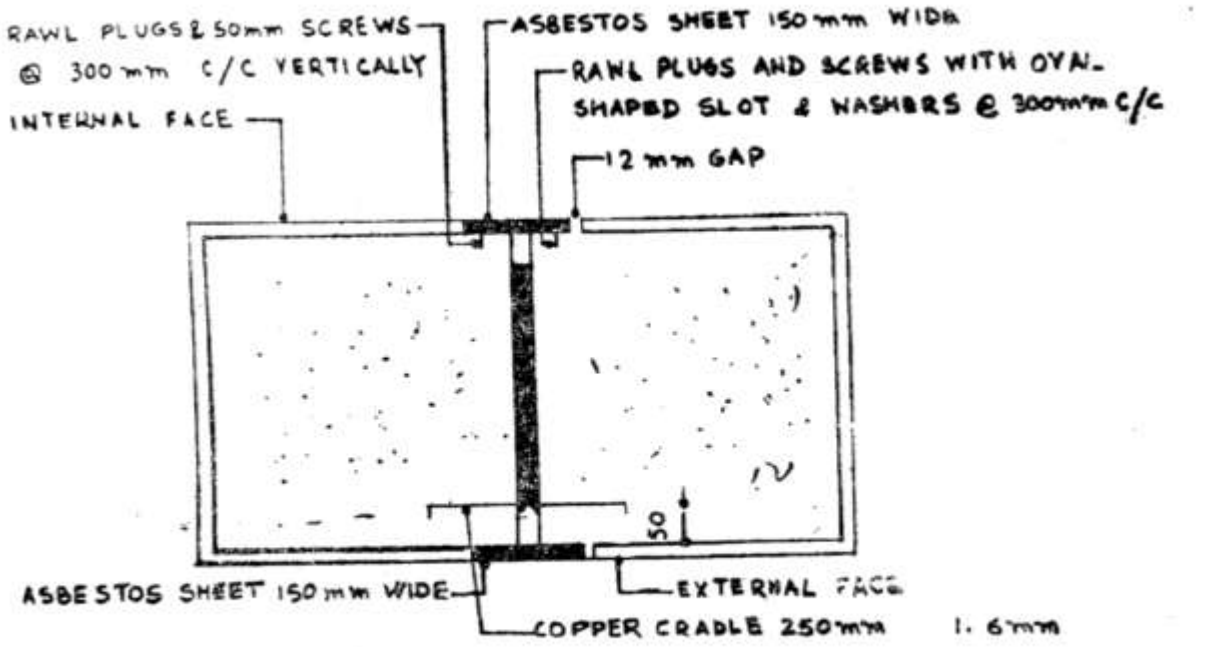

TWIN COLUMNS
SECTIONAL PLAN

SKETCH 1.

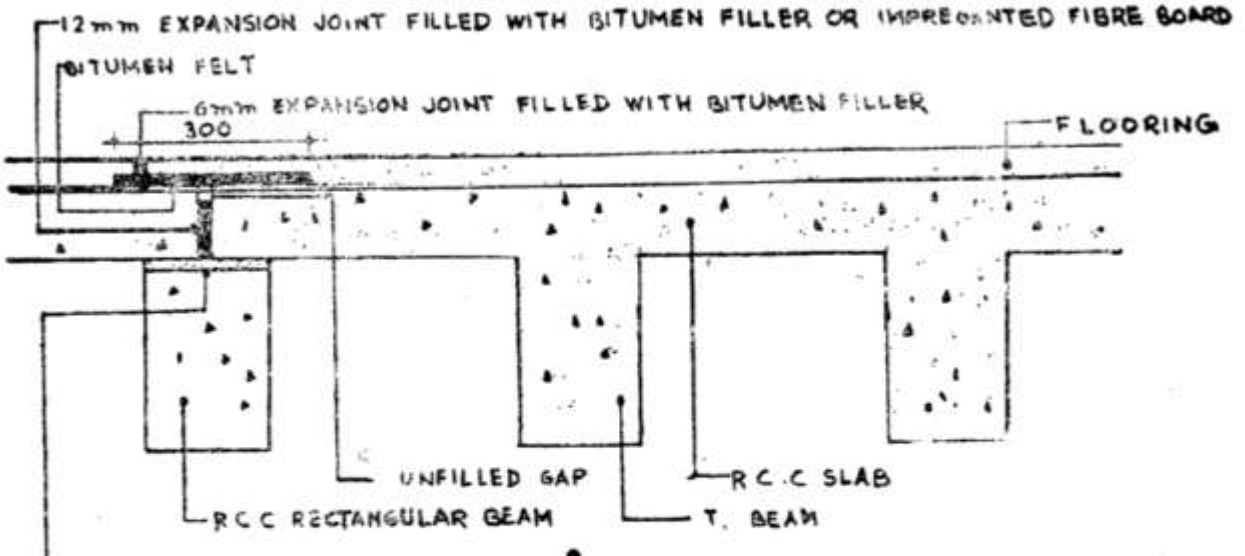

T-BEAM CHANGED IN TO RECTANGULAR BEAM

SKETCH 2.

FIG. NOT TO SCALE. ALL DIMENSIONS IN MILLIMETRE.

Fig. 22: Brick Work – Twin Beams with Twin Columns

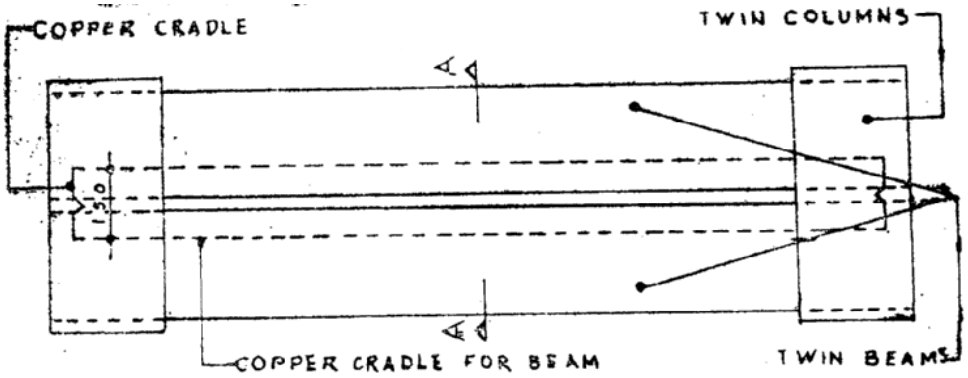

PLAN SKETCH 1

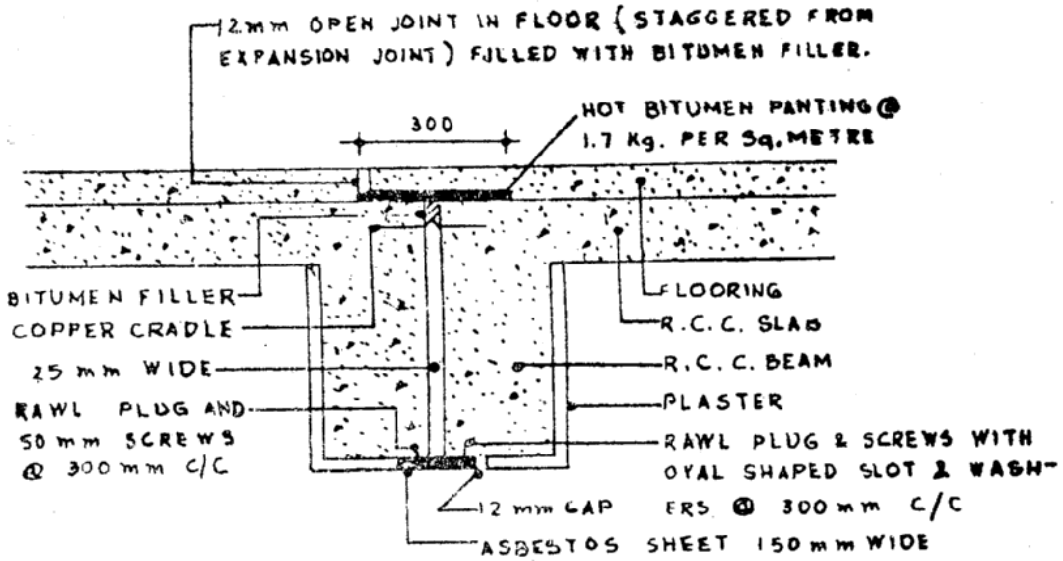

SECTION AT AA (ON FLOOR) SKETCH 2

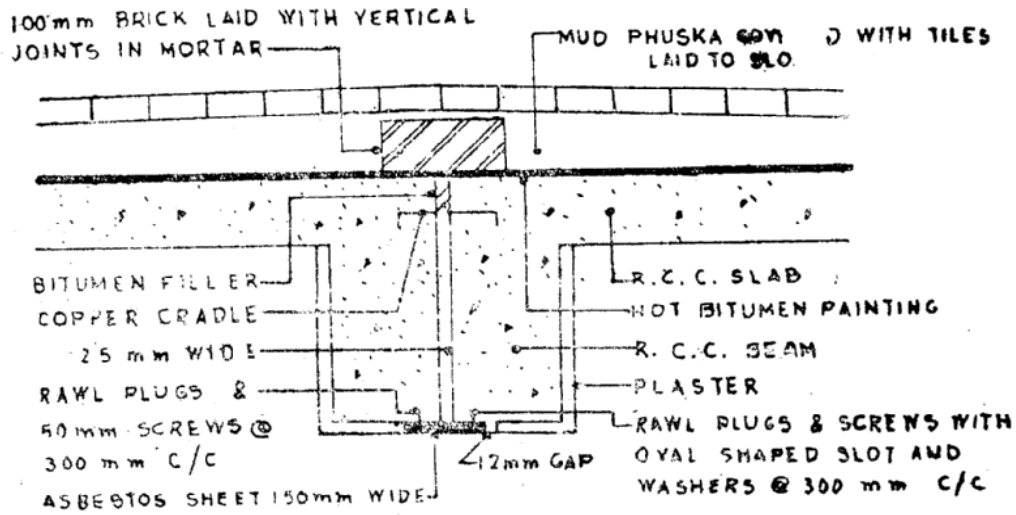

SECTION AT A-A (ON ROOF) SKETCH 3

FIG. NOT TO SCALE. ALL DIMENSIONS IN MILLIMETRE.

Fig. 23: Typical Butt and Fillet Welds

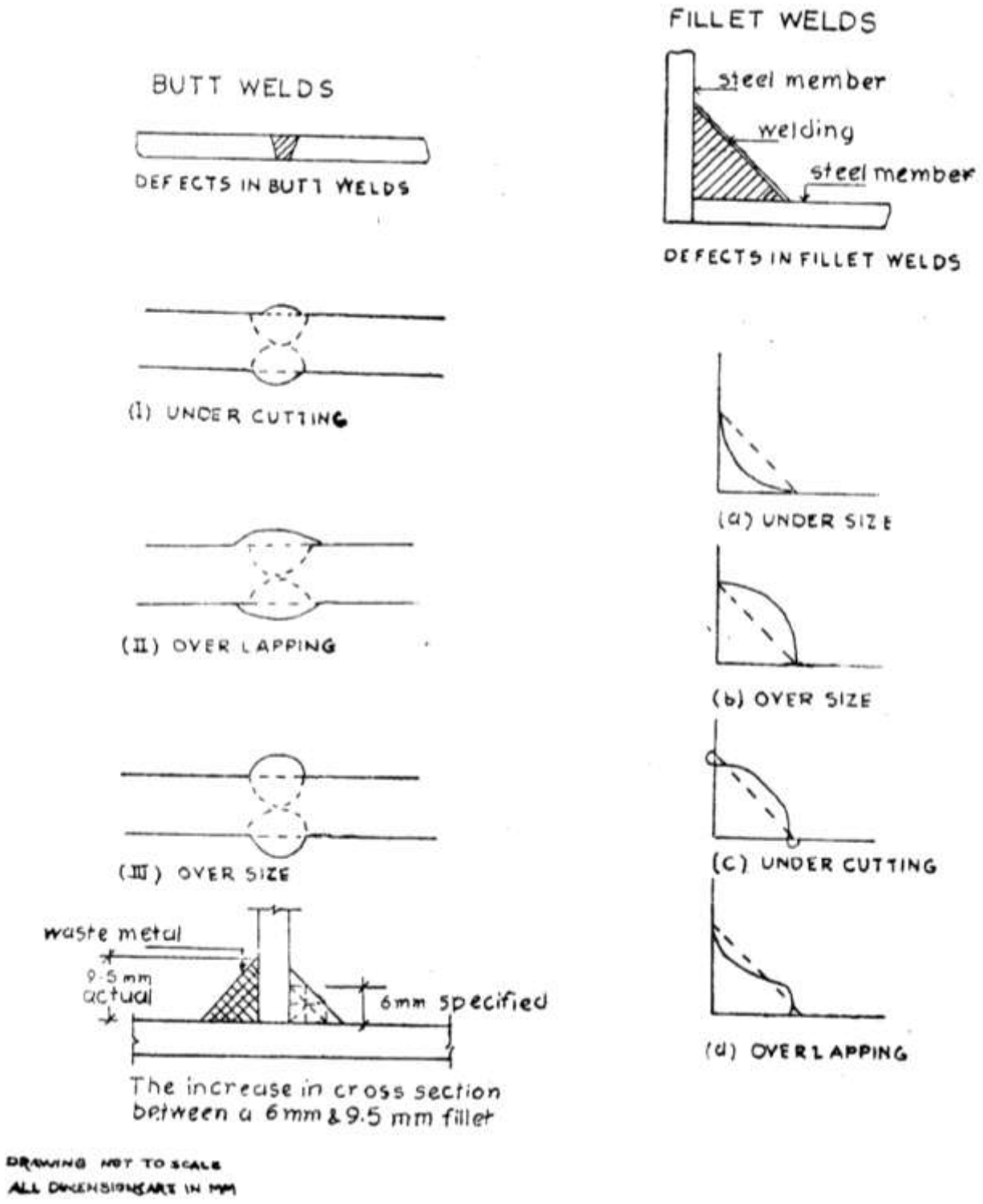

Fig. 24: Butt Hinges – Mild Steel (Medium)

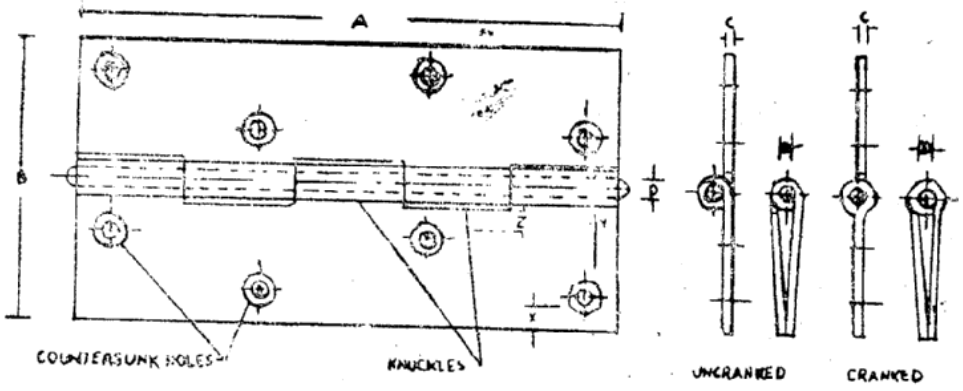

DIMENSIONS

SIZE OF HINGE	LENGTH A	BREADTH B	THICKNESS OF FLAP C	DIAMETER OF HINGE PIN D	NO OF KNUCKLES	NO OF SCREW HOLES	SCREW DESIGNATION NO	LENGTH OF WOOD SCREW	POSITION OF HOLES (NOT LESS THAN) X OR Y	Z
50	50±0.5	37±1	1.50±0.06	3.15±0.06	3	4	6	20	35	4
75	75±0.5	47±1	1.70±0.06	4.00±0.08	5	6	8	30	5	4
100	100±0.8	58±1	1.90±0.06	5.60±0.08	5	8	9	40	5	4
125	125±0.5	65±1	2.12±0.06	5.60±0.08	5	8	10	50	7	4

DRAWING NOT TO SCALE
ALL DIMENSIONS ARE IN M.M.

Fig. 25: Sliding Door Bolts

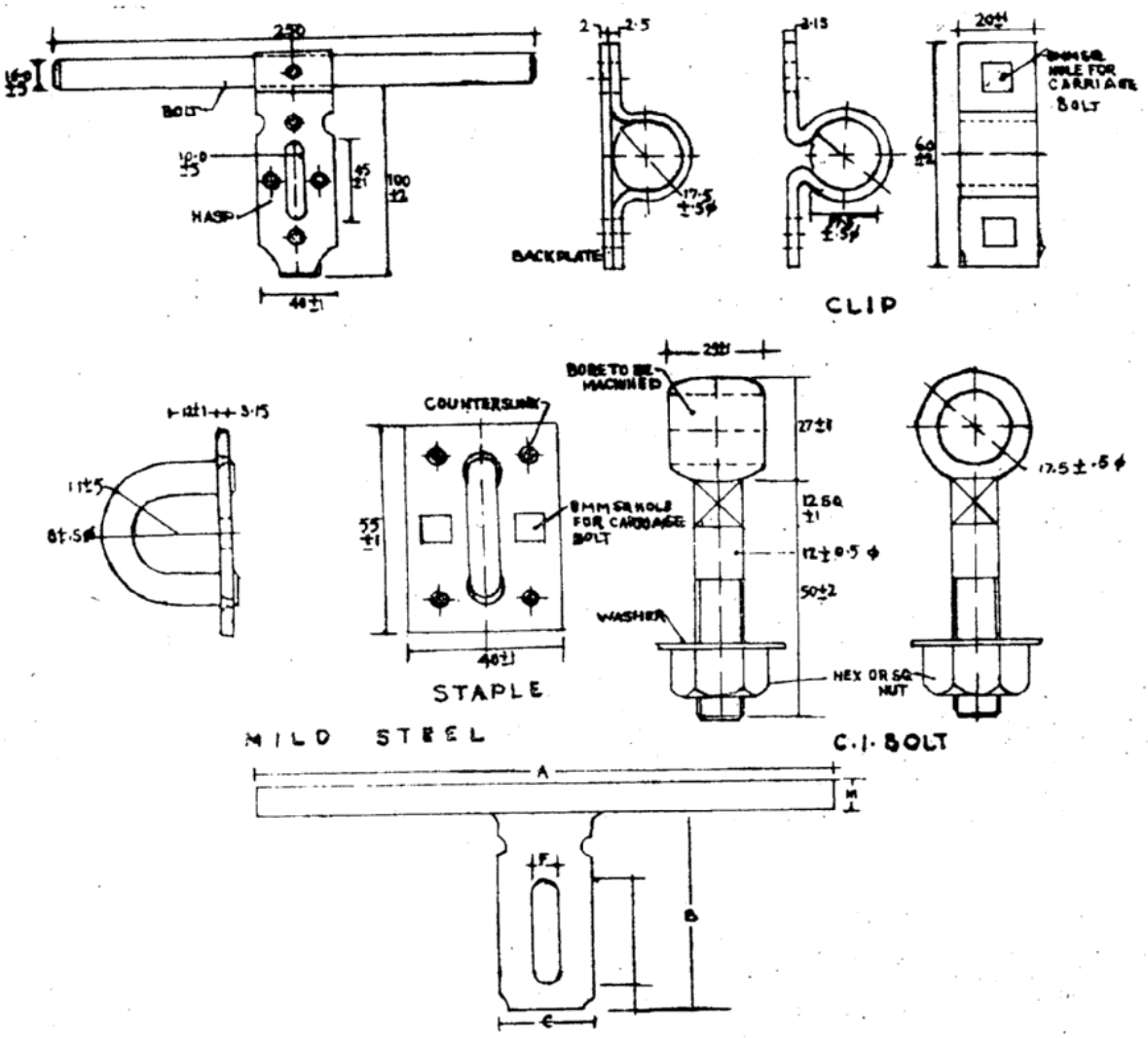

DIMENSIONS

SIZE	A	B	C	E	F	M	SCREW DESIGNATION NO.
250	250±2	100±2	45±1	55±1	15±1	16.0±0.5	9
300	300±2	100±2	45±1	55±1	15±1	16.0±0.5	9

DRAWING NOT TO SCALE
ALL DIMENSION ARE IN MM

Fig. 26: Barrel Tower Bolts

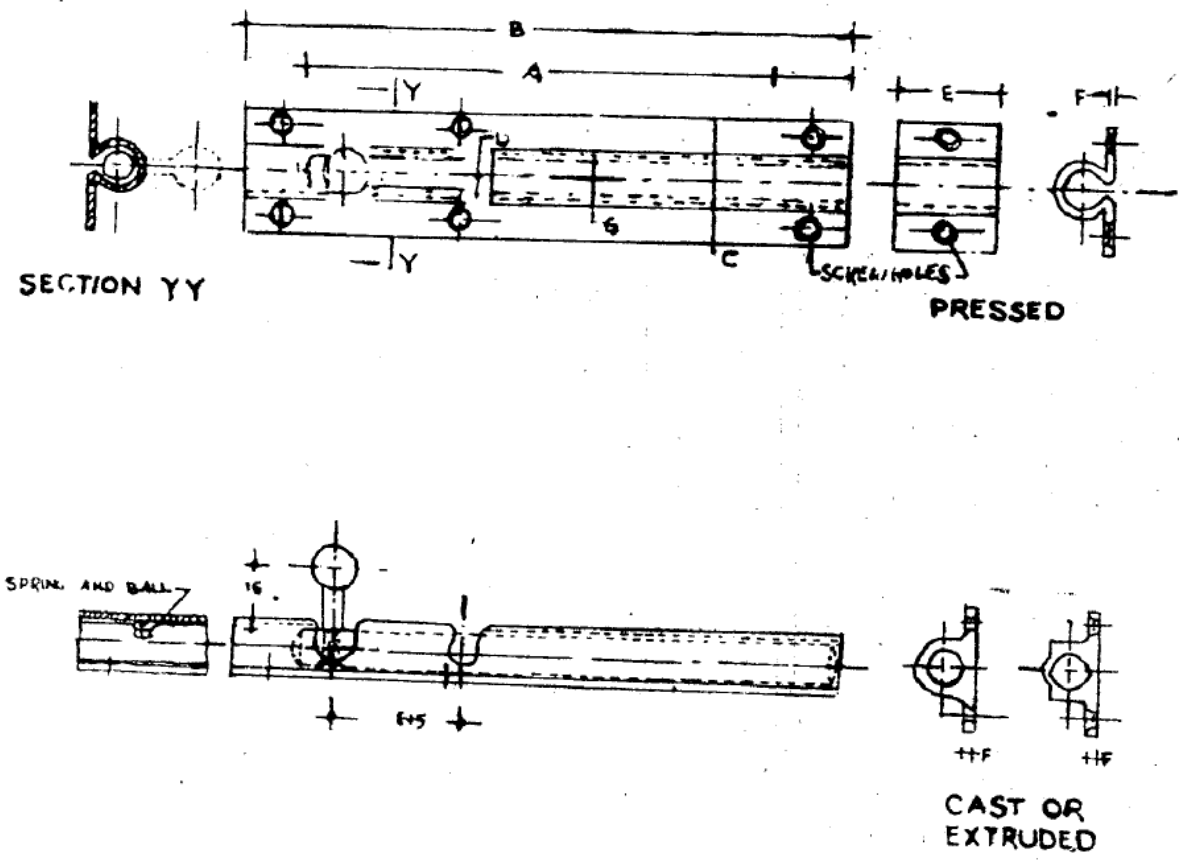

DIMENSIONS

SIZE	A	B	WIDTH OF BARREL C WHEN D=10·0	C WHEN D=10·8	D	E	THICKNESS OF METAL OF BARREL F BRASS OR ZINC ALLOY	F ALUMINIUM ALLOY WHEN D=10·0	F ALUMINIUM ALLOY WHEN D=12·0	SHEET MILD STEEL OR BRASS	G	SCREW DESIGNATION M6
100	100+3 −1	120+3 −1	32+3 −1	38+3 −1	10 OR 12 ±0·5	25±1	1·50 +0·5 −0·2	1·60 ±0·33	2·40 ±0·36	1 TO 1·25 ± 0·36	1 TO 1·5 MORE THAN DIA OF BOLT	6
150	150+3 −1	170+3 −1	32+3 −1	38+3 −1	10 OR 12 ±0·5	25±1	2·0 +0·5 −0·2	1·60 ±0·33	2·40 ±0·36	1 TO 1·25 ±0·36		8
200	200+3 −1	220+3 −1	32+3 −1	38+3 −1	10 OR 12 ±0·5	25±1	2·0 +0·5 −0·2	1·60 ±0·33	2·40 ±0·36	1 TO 1·25 ±0·36		8
250	250+3 −1	270+3 −1	32+3 −1	38+3 −1	10 OR 12 ±0·5	25±1	2·0 +0·5 −0·2	1·60 ±0·33	2·40 ±0·36	1 TO 1·25 ±0·36		10

Fig. 27: Arrangement for Mortice Locks Test

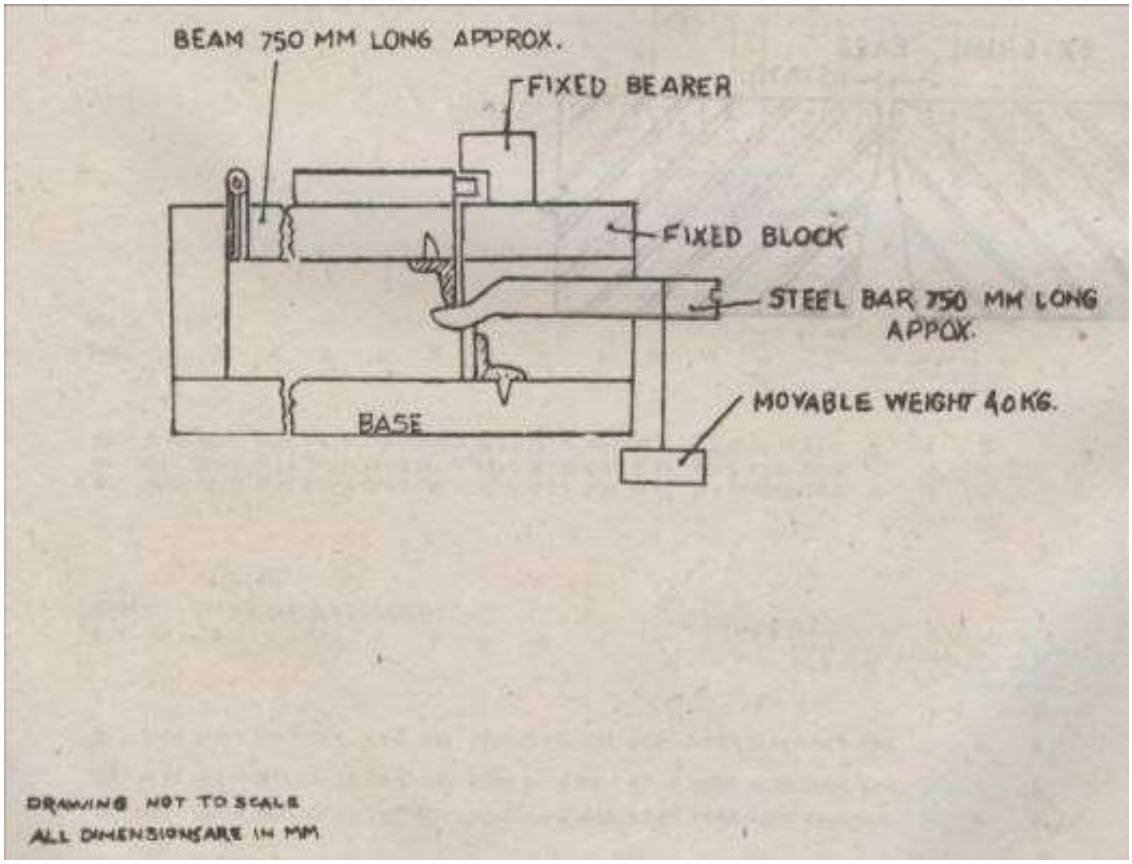

Fig. 28: Door Handles

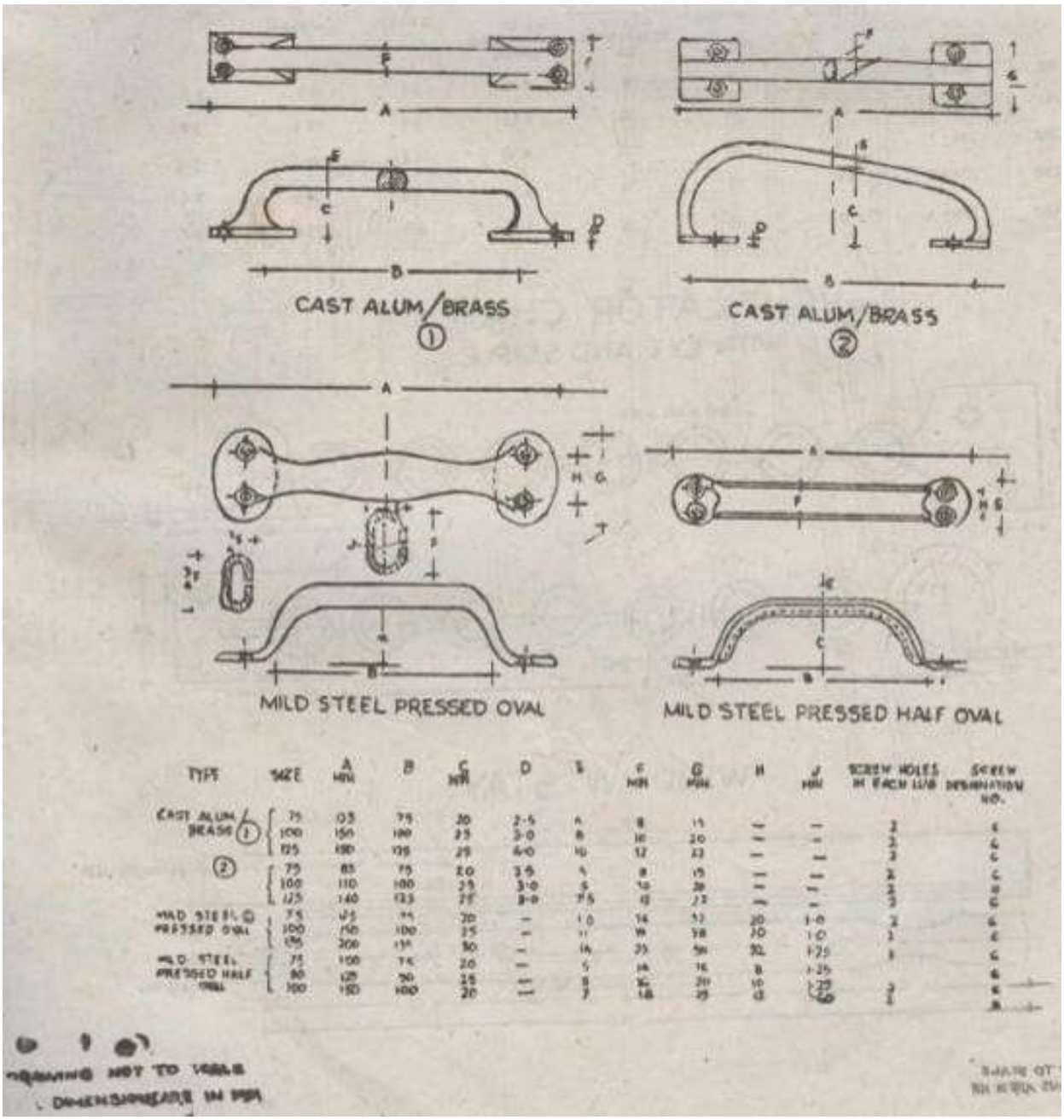

TYPE	SIZE	A MIN	B	C MIN	D	E	F MIN	G MIN	H	J MIN	SCREW HOLES IN EACH LUG	SCREW DESIGNATION NO.
CAST ALUM/BRASS ①	75	93	75	20	2·5	6	8	15	—	—	2	6
	100	150	100	25	3·0	8	10	20	—	—	2	6
	125	190	125	29	4·0	10	12	23	—	—	2	6
②	75	85	75	20	3·5	5	8	15	—	—	2	6
	100	110	100	25	3·0	6	10	20	—	—	2	6
	125	140	125	29	3·0	7·5	12	23	—	—	2	6
MILD STEEL PRESSED OVAL	75	95	75	20	—	10	14	17	20	1·0	2	6
	100	150	100	25	—	11	19	28	20	1·0	2	6
	125	200	125	30	—	14	25	36	32	1·25	2	6
MILD STEEL PRESSED HALF OVAL	75	100	75	20	—	5	14	16	8	1·25		6
	80	125	80	25	—	8	16	20	10	1·25	2	6
	100	150	100	20	—	7	18	25	10	1·25	2	6

DRAWING NOT TO SCALE
ALL DIMENSIONS ARE IN MM

Fig. 29: Floor Door Stopper – Cast Type

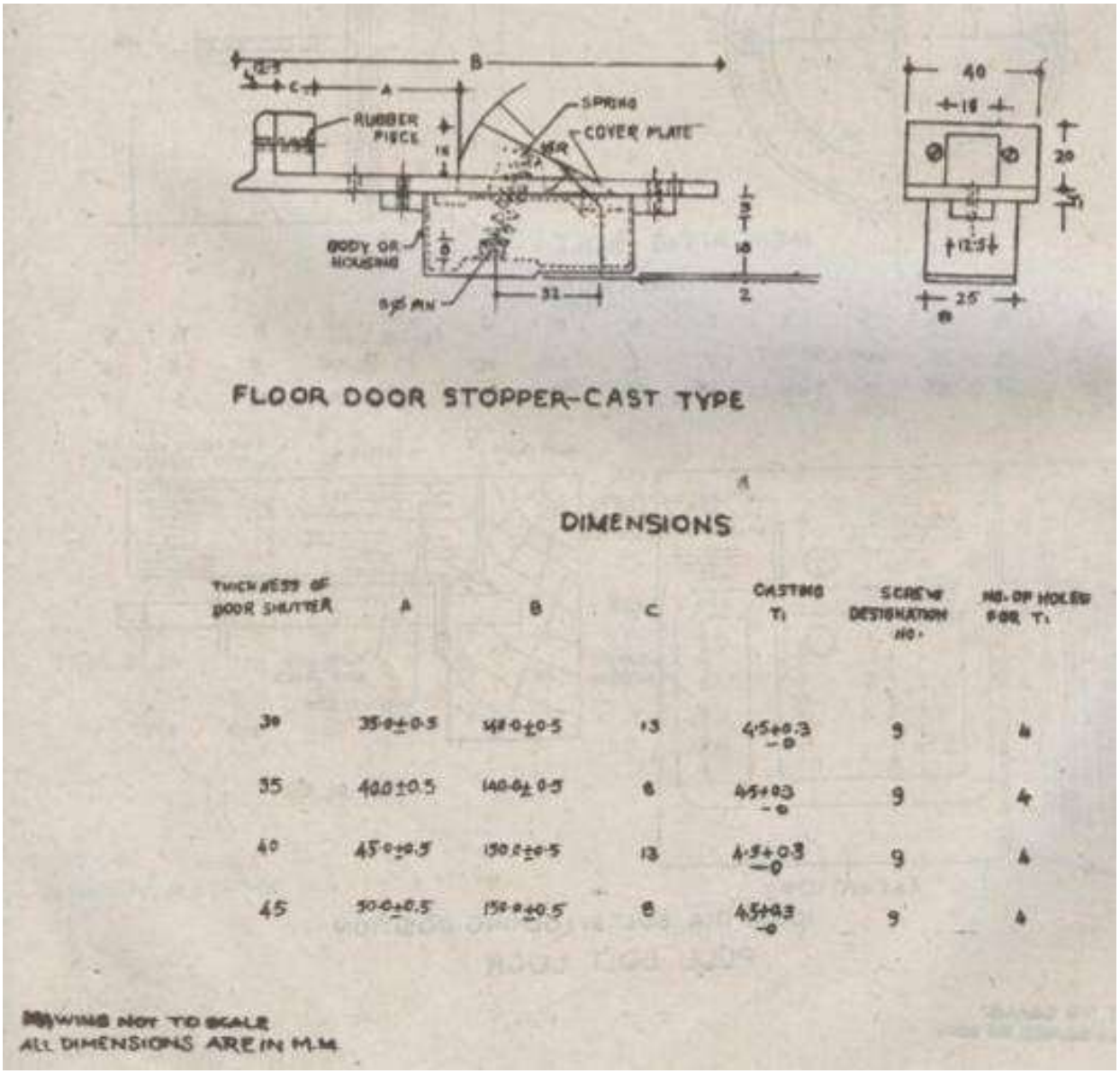

Fig. 30: Hooks and Eyes etc. – Mild Steel and Brass

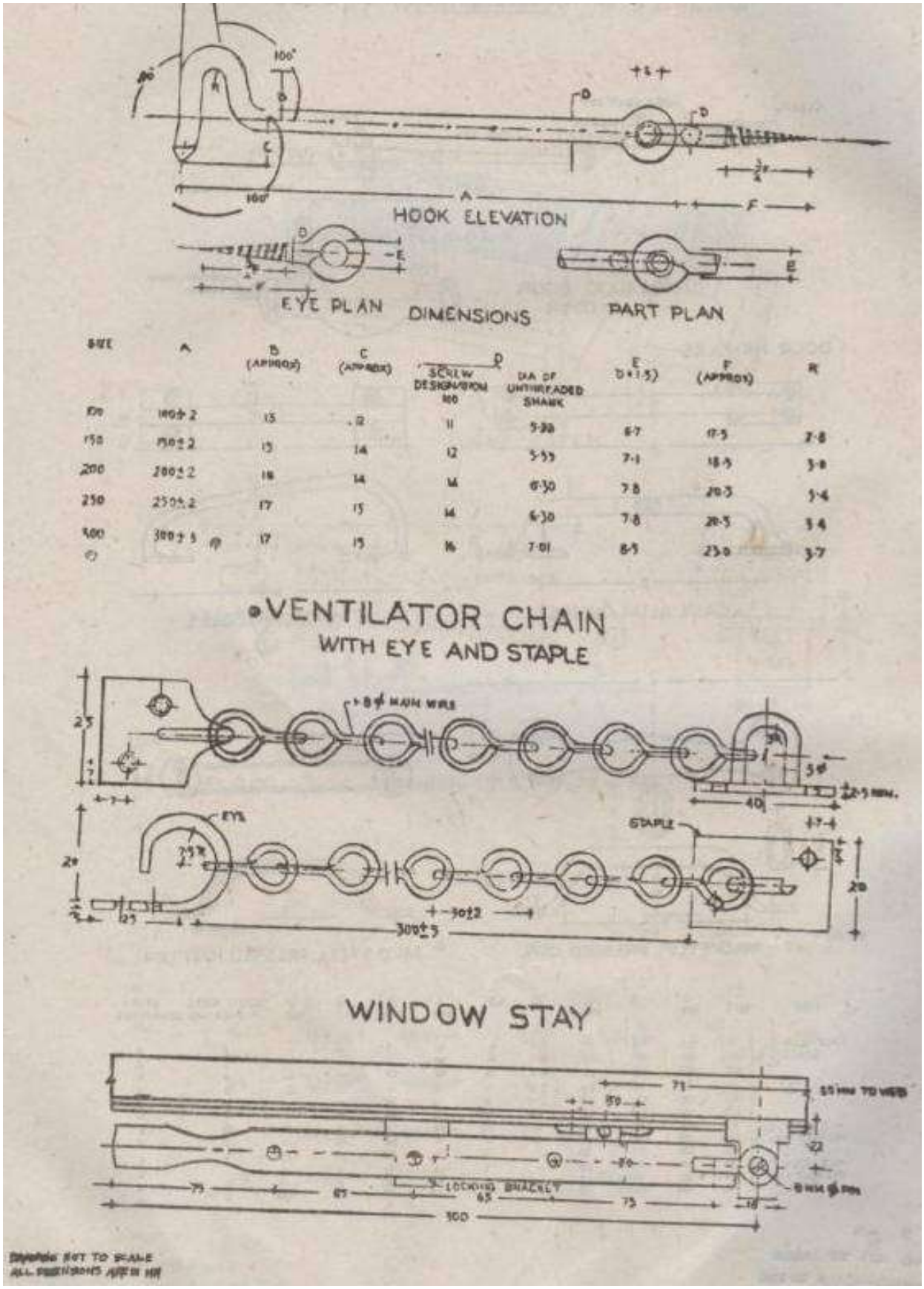

Fig. 31: Sketch showing Fixing of Hold-fasts to Door Frame in various locations

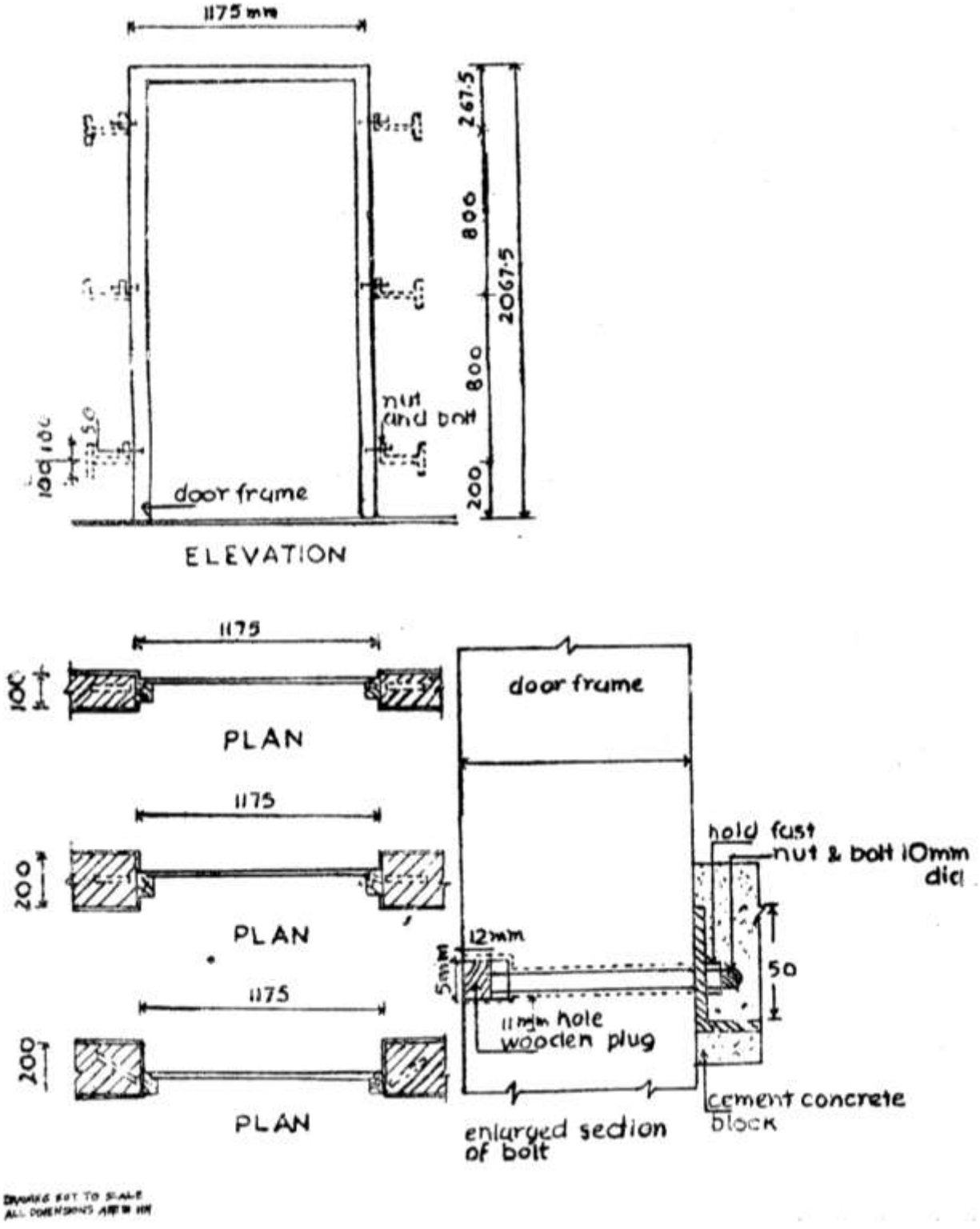

Fig. 32: Arrangement of Hold-fasts

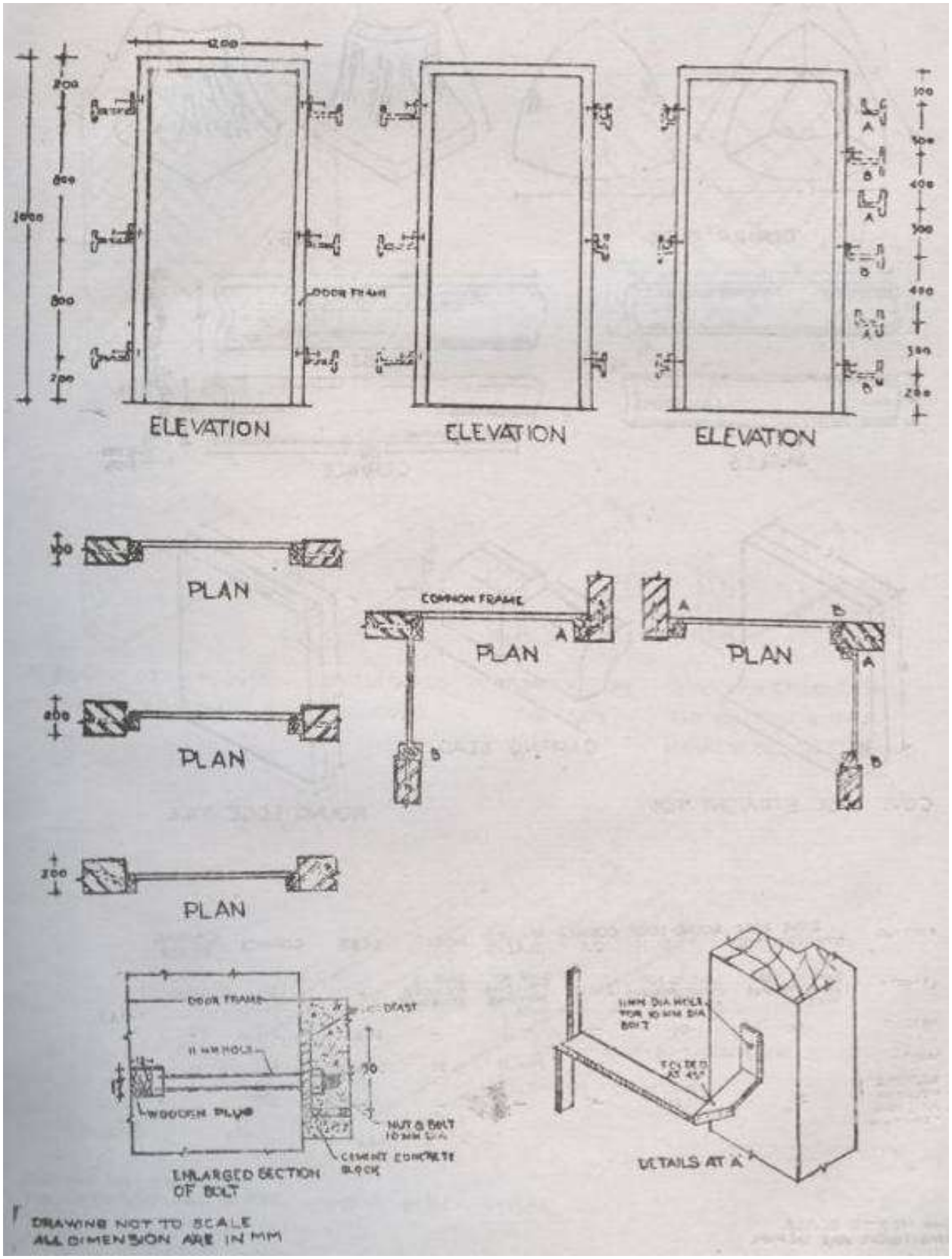

Fig. 33: Bedding for Laying R.C.C. Pipes

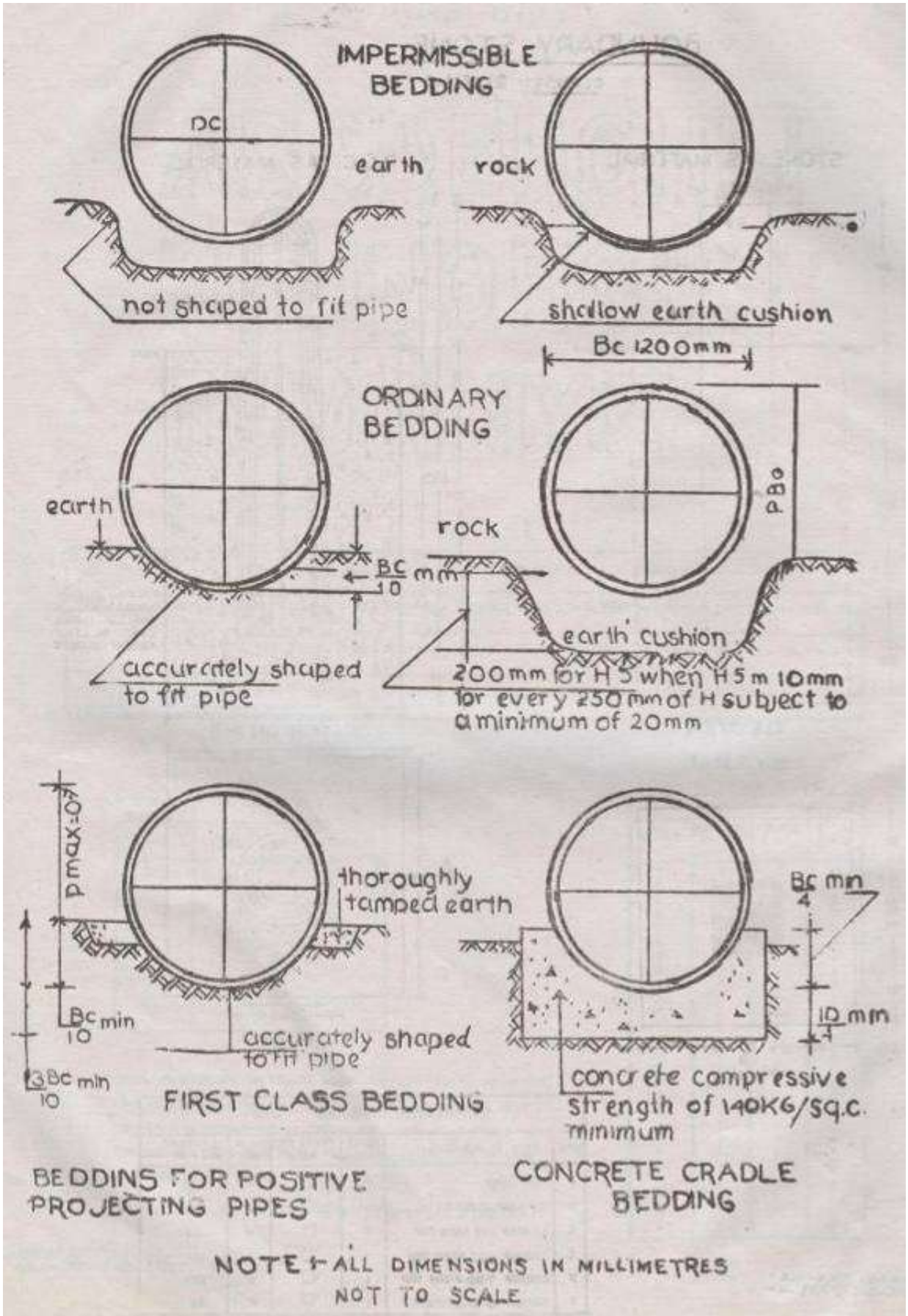

Fig. 34: Road Gully Chamber with C.I. Grating and R.C.C. Road Gully Grating

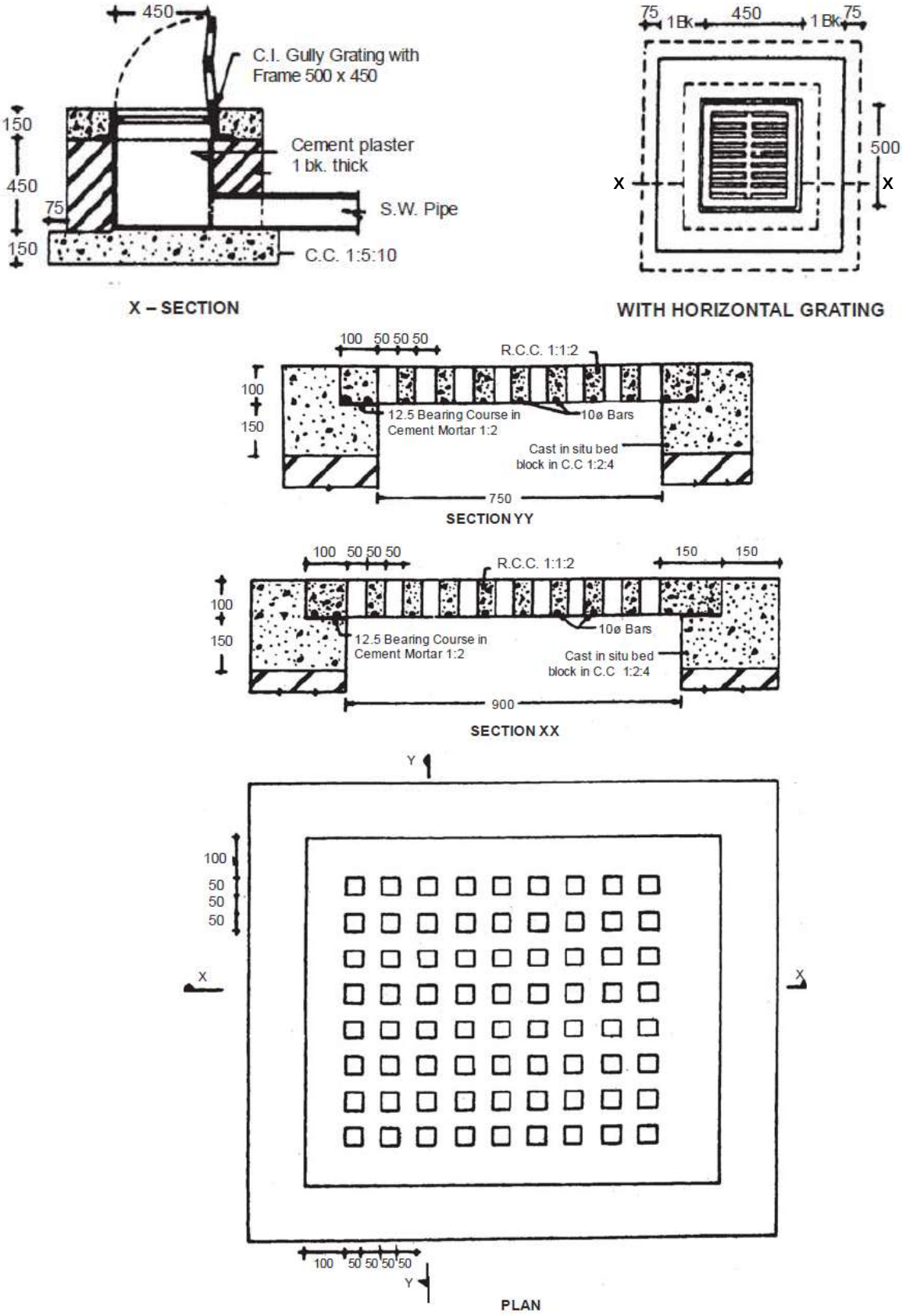

1. Drg. Not to Scale
2. All Dimensions are in mm
3. Clear Cover over Reinforcement shall be 20 mm
4. The Slab Covers shall Cast in R.C.C. 1:1:2
5. The R.C.C.. Cover shall be Properly Cured

Fig. 35: Pattern 1 and Pattern 2 Water Closets

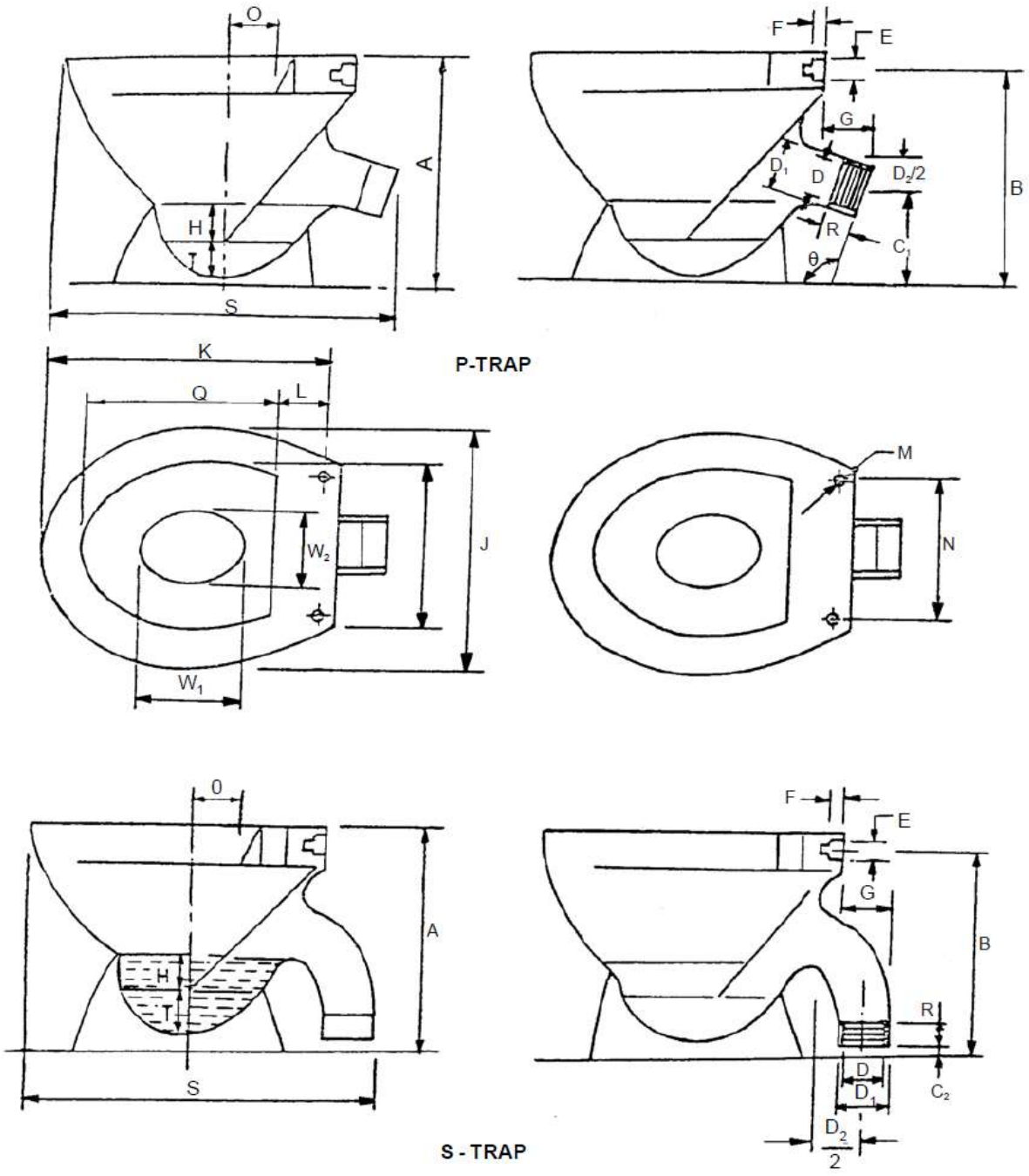

All dimensions in millimetres

Fig. 36: Pattern 3 Water Closet with Horizontal P-Trap

FUNCTIONAL DIMENSIONS
All dimensions in millimetres

Sl.No.	Description	Ref. in Fig.	Pattern 1	Pattern 2	Pattern 3
(1)	(2)	(3)	(4)	(5)	(6)
(i)	Height	A	390 ± 10	390 ± 10	390 ± 10
(ii)	Depth of water seal, *Min*	H	50	50	50
(iii)	Width of water closet	J	360 ± 10	360 ± 10	360 ± 10
(iv)	Distance from centre of seat bolt hole to front of water closet	K	415 to 445	415 to 445	415 to 445
(v)	Distance from centre of seat bolt hole to inside face of flush rim at back, *Max*	L	80	80	80
(vi)	Distance between a vertical line from tip of back plate to inside face of flush rim at back, *Max*	O	70	70	70
(vii)	Width of opening, *Min*	P	240	240	240
(viii)	Length of opening, *Min*	Q	290	290	290
(ix)	Overall length	S	500-575	500-575	500 *Max*
(x)	Trap inlet depth, *Min*	T	75	75	75
(xi)	Water surface				
	Back to front	W_1	150 *Min*	100 *Min*	150 *Min*
	Side to side	W_2	110 *Min*	75 *Min*	110 *Min*

Note : In case of centre vent in S Trap, overall length should be taken as S + 75.

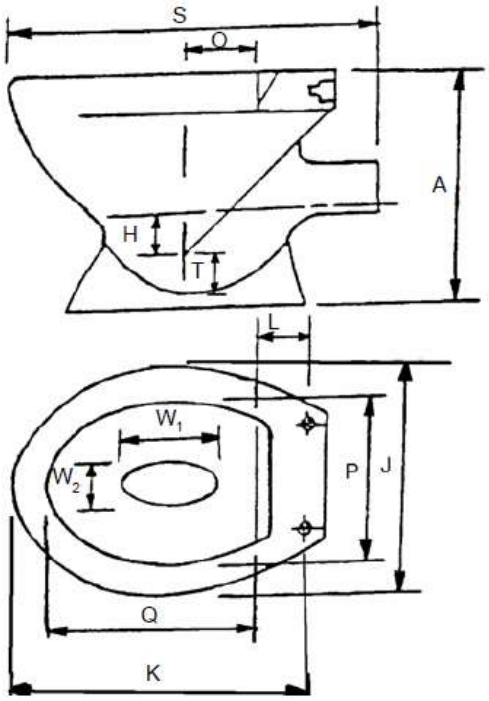

FUNCTIONAL DIMENSIONS

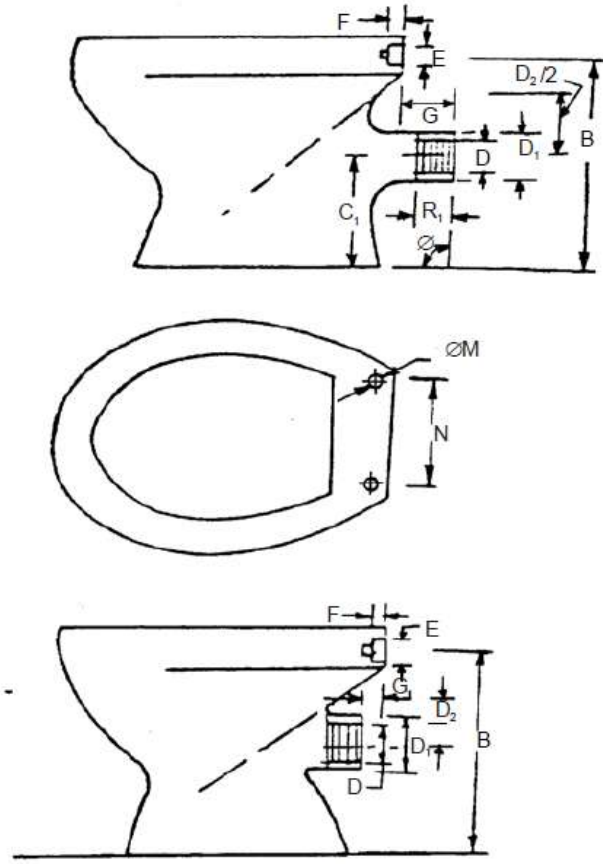

CONNECTING DIMENSIONS

All dimensions in millimetres

Fig. 37: Wash Basins

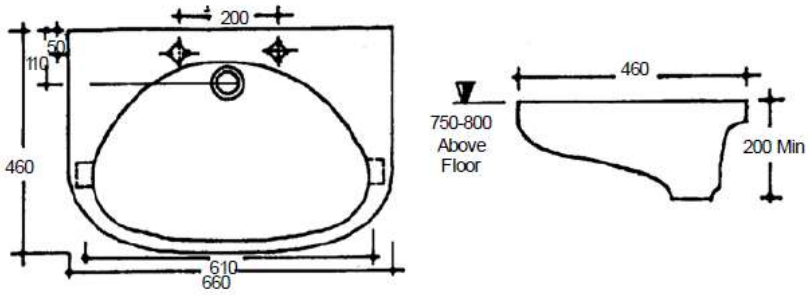

SURGEONS BASIN

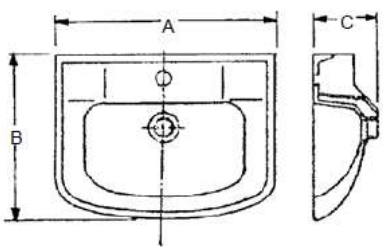

FLAT BACK

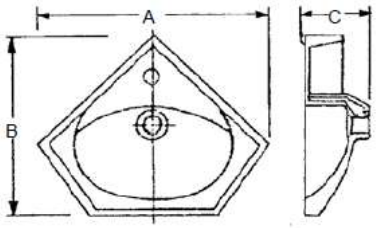

ANGLE BACK

FUNCTIONAL DIMENSIONS OF WASH BASINS

All dimensions in millimetres

S. No.	*Pattern*	*Size*	*Length A*	*Breadth B*	*Height C*
(1)	*(2)*	*(3)*	*(4)*	*(5)*	*(6)*
(i)	Flat Back	660 x 460 (Surgeon's basin)	660	460	200, *Min*
		630 x 450	630	450	290, *Max*
		550 x 400	550	400	290, *Max*
		450 x 300	450	300	225, *Max*
(ii)	Angle back	600 x 480	600	480	290, *Max*
		400 x 400	400	400	290, *Max*

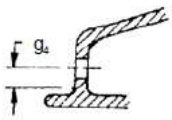

SECTIONA-A

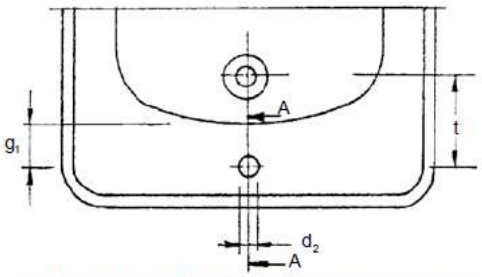

CONNECTING DIMENSIONS FOR SINGLE TAP HOLE WASH BASINS

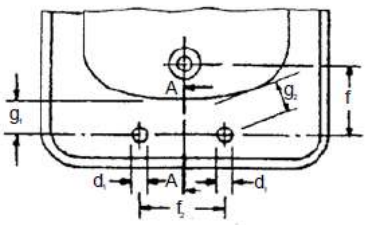

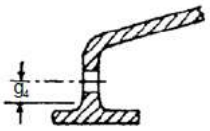

SECTIONA-A

CONNECTING DIMENSIONS OF WASH BASINS AND TWO TAP

Drawing Not to Scale
All dimensions are in mm

Fig. 38: Fixing Arrangement of Wash Basins

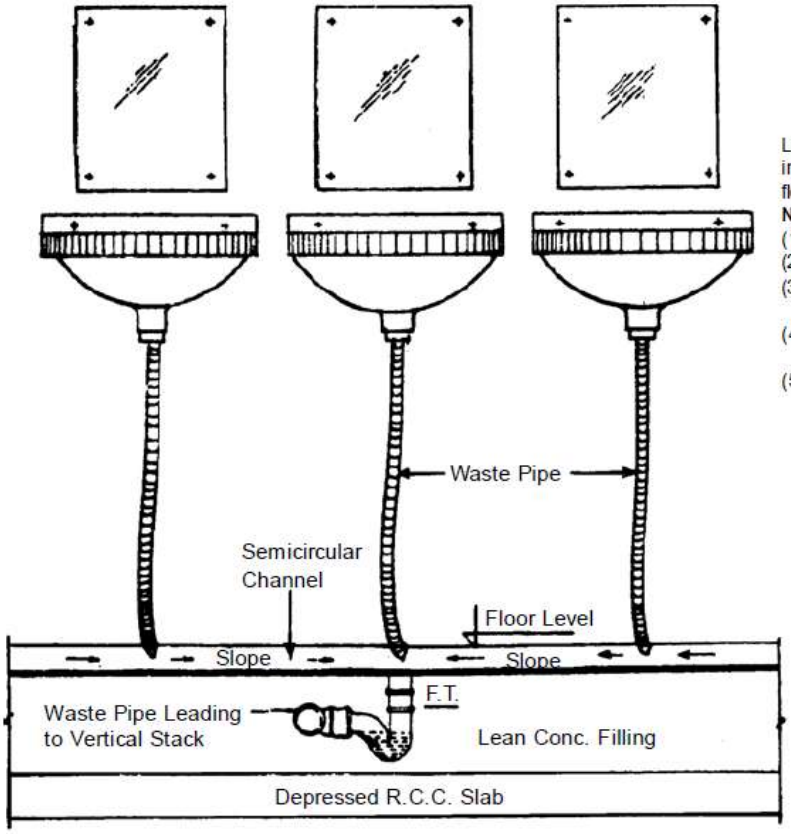

Location : General Offices Waste discharging in Semicircular open channel and collected in floor trap.

Notes:

(1) Slope : 1 in 10 to 1 in 50.
(2) F.T.: Ref. Q.C.T.A Circular No. 2 of 1992.
(3) Waste Pipe : P.V.C. flexible Type (32 mmø)
(4) F.T. Location preferred in Centre to Achieve Max. Slope.
(5) Water supply connection not shown.

TYPICAL ELEVATION OF 3 WASH BASINS IN A ROW

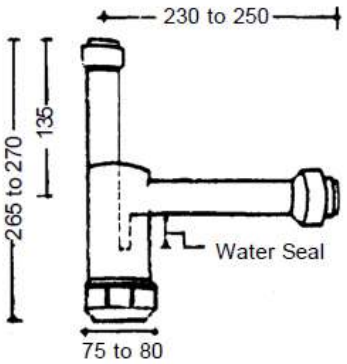

TYPICAL DETAIL OF BOTTLE TRAP

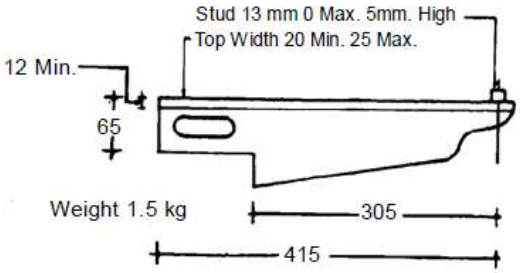

C.I. BRACKET

Note : Stud shall be provided for supports intended for glazed earthenware, vitreoware wash basins only.

Drawing Not to Scale
All dimensions are in mm

Fig. 39: Typical Vertical section of Wash Basin (Waste Pipe Open to View)

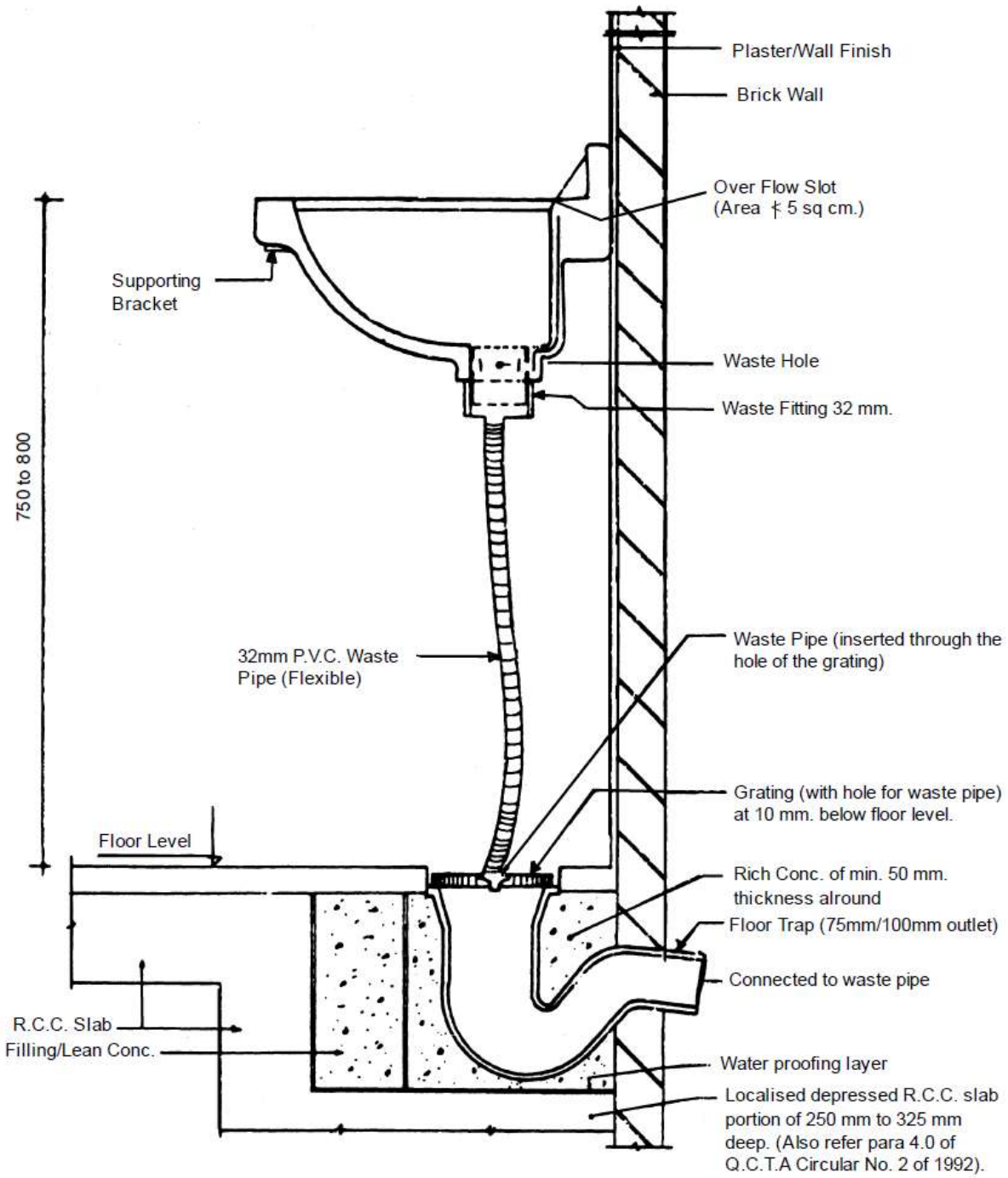

Drawing Not to Scale
All dimensions are in mm

Fig. 40: Typical Vertical section of Wash Basin (Waste Pipe Concealed from View)

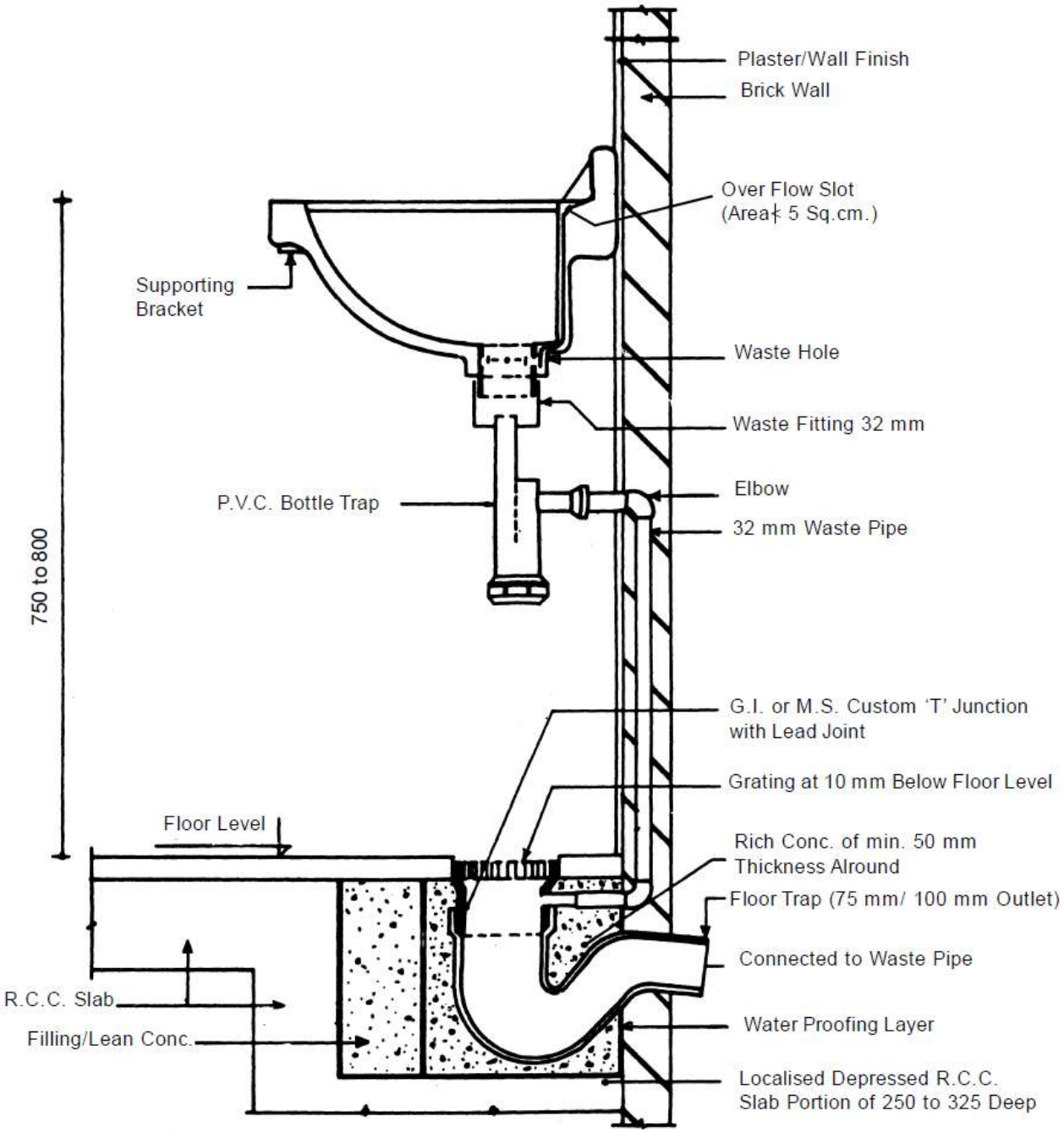

Drawing Not to Scale
All dimensions are in mm

Fig. 41: Waste Fittings for Wash Basin and Sinks

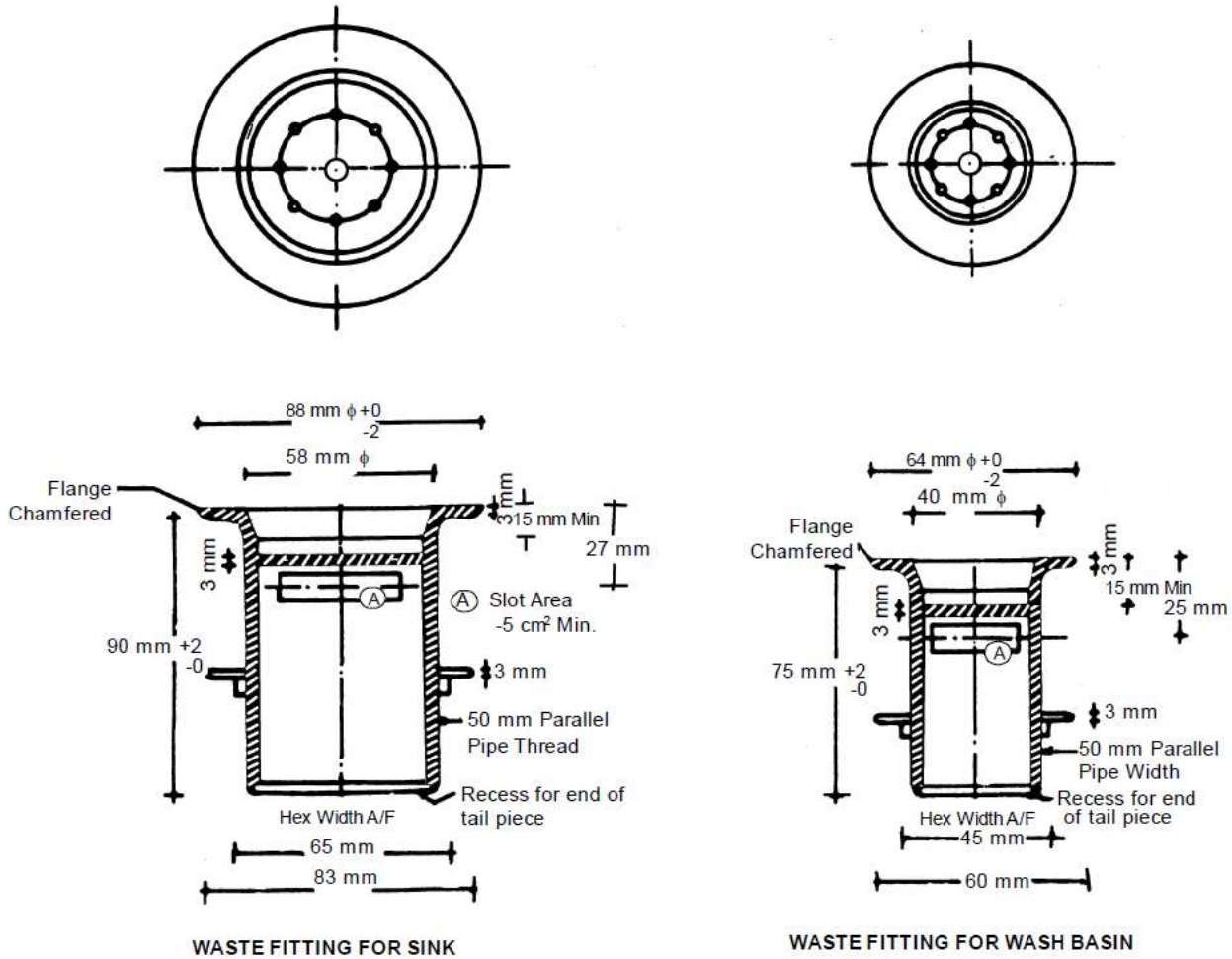

Drawing Not to Scale
No. and Sizes of Holes Indicative

Fig. 42: Plastic Seat and Cover for Water Closet

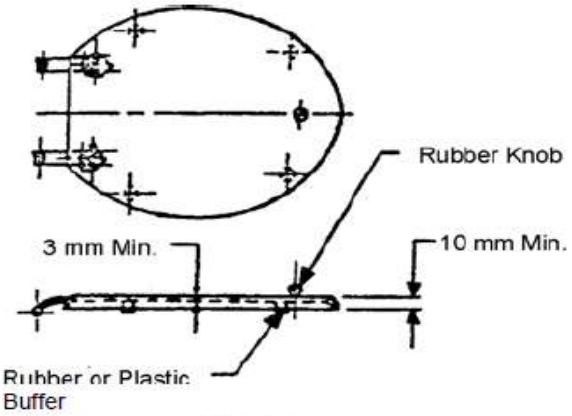

COVER

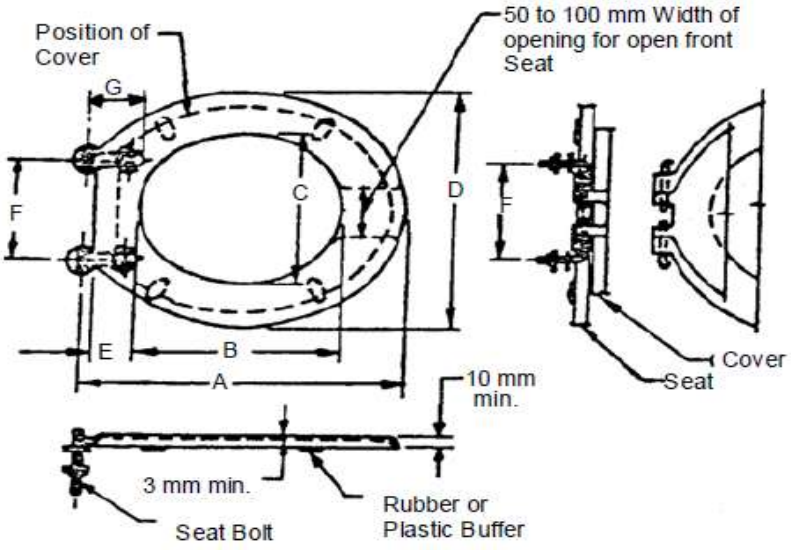

SEAT

Table 1 Dimensions of Seats and Covers

All dimensions in millimetres

Sl. No.	*Description*	*Dimensions*	
		Min	*Max*
(1)	(2)		
(i)	Distance from centre line of hinge bolts to extreme edge of rim at front, *A*	445	475
(ii)	Length of opening at longest point, *B*	250	290
(iii)	Width of opening at widest point, *C*	215	240
(iv)	Overall width at widest point, *D*	380	—
(v)	Distance between inner and outer rims, *E*	55	—
(vi)	Centre-to-centre distance of seat bolt holes, *F*	145	175
(vii)	Distance from centre line of hinge bolts to inner rim of seat at the back, *G*	85	—
(viii)	Thickness of seat at thinnest point	3	—
(ix)	Thickness of cover at thinnest point	3	—

Note : Some hinging devices are made so as to provide adjustment in the longitudinal direction. This is not precluded by these figures.

Fig. 43: Urinal Bowl Type (Flat Back)

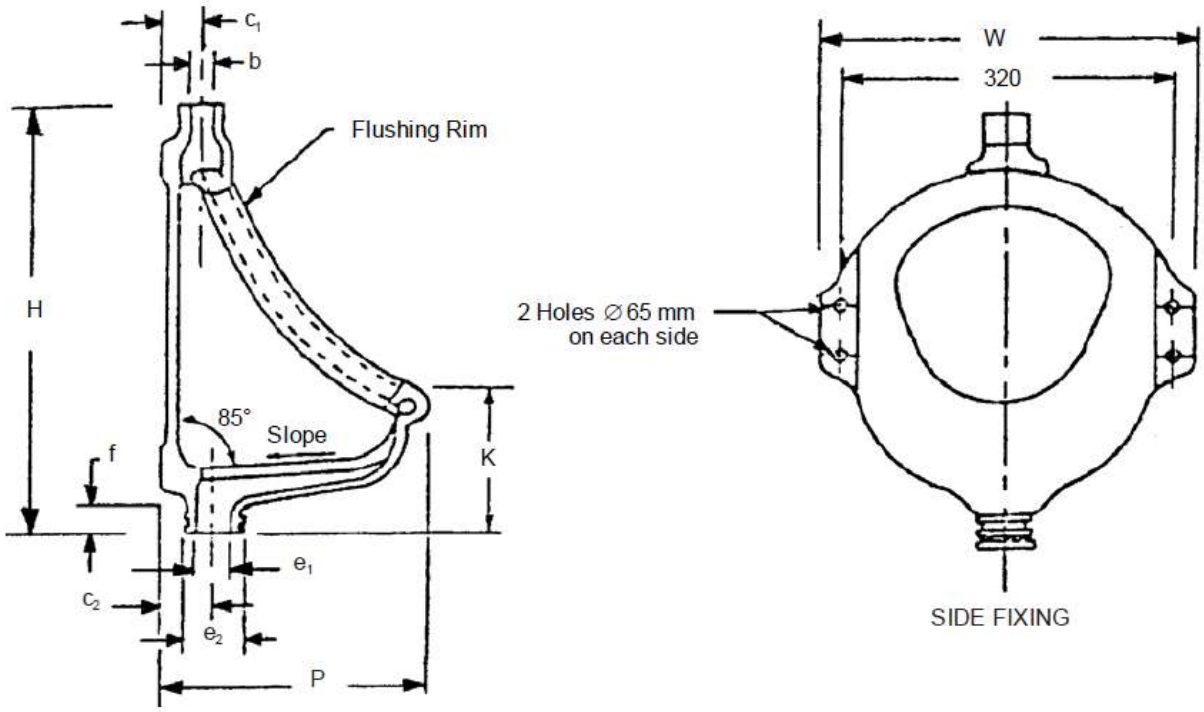

Note : Where a closed channel with overflow is not provided a domed grating with perforating starting from the base and the crown of which shall be 25 mm, minimum above surface shall be provided which may be integral or otherwise.

Fig. 44: MS Stays and Clamp

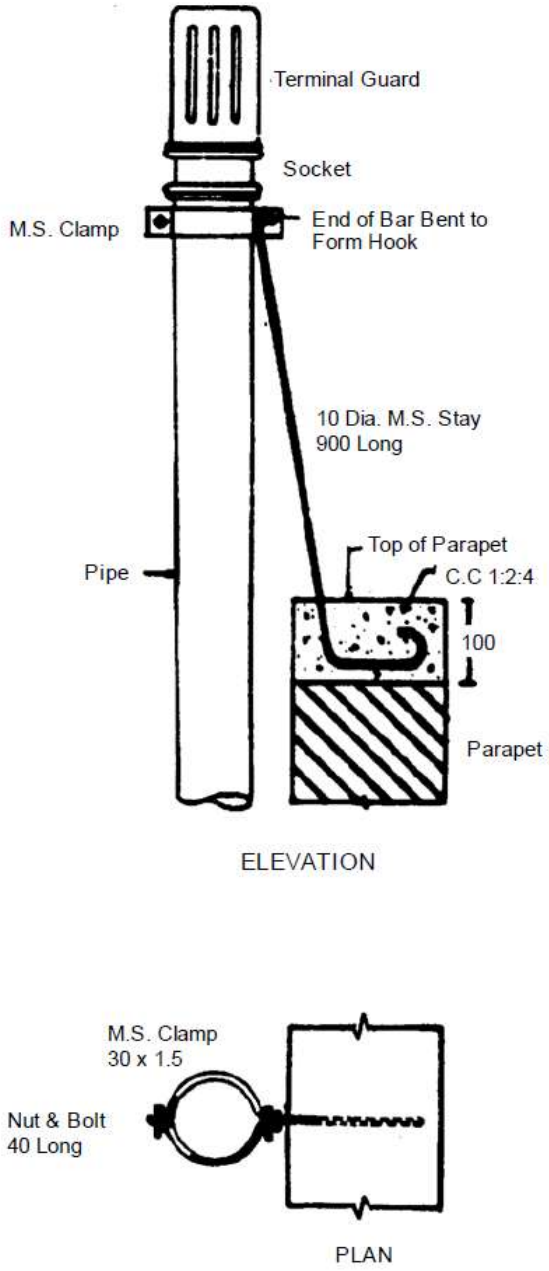

Drawing Not to Scale
All Dimensions are in mm

Note: The clamps shall be made from 1.5 mm thick M.S. flat of 32 mm width, bent to the required shape and size to fit tightly on the socket, when tightened with nuts & bolts. It shall be formed of two semicircular pieces with flanged ends on both sides with holes to fit in the screws, bolts and nuts 40 mm long. The stay shall be minimum one metre long of 10 mm dia M.S. bar. One end of the stay shall be bent for embedding in the wall in cement concrete block of size 20 cm x 10 cm x 10 cm in 1:2:4 mix (1 cement : 2 coarse sand : 4 graded stone aggregate 20 mm nominal size). The concrete shall be finished to match with the surrounding surface.

Fig. 45: Bib Tap and Stop Valve

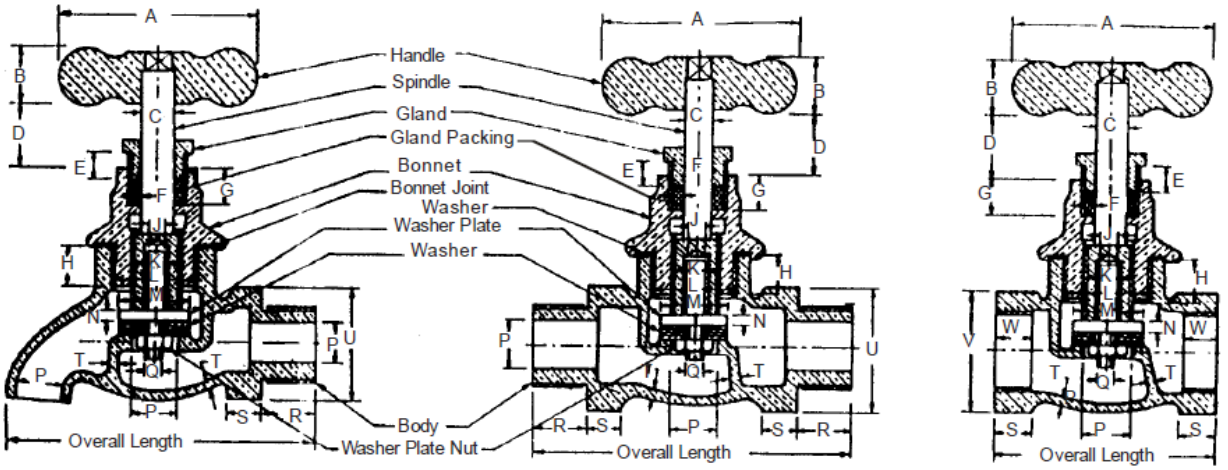

All dimensions in millimetres

Dimensions → / *Nominal Sizes ↓*	*A*	*B*	*C*	*D*	*E*	*F*	*G*	*H*	*J*	*K*	*L*	*M*	*N*	*P* +0.0 −0.5	*Q*	*R*	*S*	*T*	*U*	*V*	*W*	*Lift of Washer Plate (with Washer in Position, Min.)*
	Min.	*Min.*	*Min.*	*Min.*	*Min.*	*Min.*	*Min.*	*Min.*	*Min.*	*Min.*	*Min.*	*Min.*	*Min.*	*Min.*	*Min.*	*Min.*	*Min.*	*Min.*	*Min.*	*Min.*	*Min.*	*Min.*
8	47.8	13.3	7.8	16.5	6.3	2.0	7.9	7.0	3.8	10.0	M 20x 1.5	14.3	2.8	6.5	2.4	11.0	4.7	1.6	15.2	19.5	7	3.5
10	54.0	14.0	9.4	18.7	7.5	2.0	9.5	9.5	4.7	11.5	M 20 x 1.5	15.9	3.2	9.0	3.2	11.4	7.9	2.0	20.8	23.3	7	4
15	54.0	14.0	9.4	19.0	7.5	2.0	9.5	11.0	5.6	11.5	M 24 x 1.5	19.0	3.2	13.0	4.1	15.0	9.5	2.0	25.6	28.3	9	4.5
20	60.4	15.7	10.9	20.1	8.9	2.5	11.1	12.5	6.4	13.5	M 30 x 1.5	25.4	4.0	18.0	4.9	16.3	10.3	2.0	30.5	33.0	10.5	6
25	66.8	18.0	12.5	23.0	10.1	2.5	12.7	13.0	7.1	17.0	M 39 x 1.5	33.3	4.0	23.0	4.9	19.1	11.0	2.8	37.6	42.4	11.5	7
32	74.6	20.5	14.1	30.9	11.4	2.5	14.3	16.0	7.8	19.0	M 48 x 1.5	40.1	4.3	30	5.9	21.4	12.7	3.2	47.2	52.1	13.5	9.5
40	82.5	22.0	15.7	33.3	12.7	2.5	15.9	17.5	8.6	20.5	M 56 x 1.5	47.7	5.5	36	6.6	21.4	14.3	3.2	56.4	58.5	13.5	11
50	95.0	25.3	17.3	35.9	14.0	2.5	17.4	17.5	12.5	26.0	M 72 x 1.5	63.5	6.3	46	8.3	25.1	15.9	4.0	70.1	71.5	16.5	14.5

Note 1: Length of thread R includes cut back under hexagon, if any.
Note 2: The values of K are for core diameter.
Note 3: The diameter of U and V are for face to face.
Note 4: The dimension F is packing space.

Fig. 46: Gully Trap

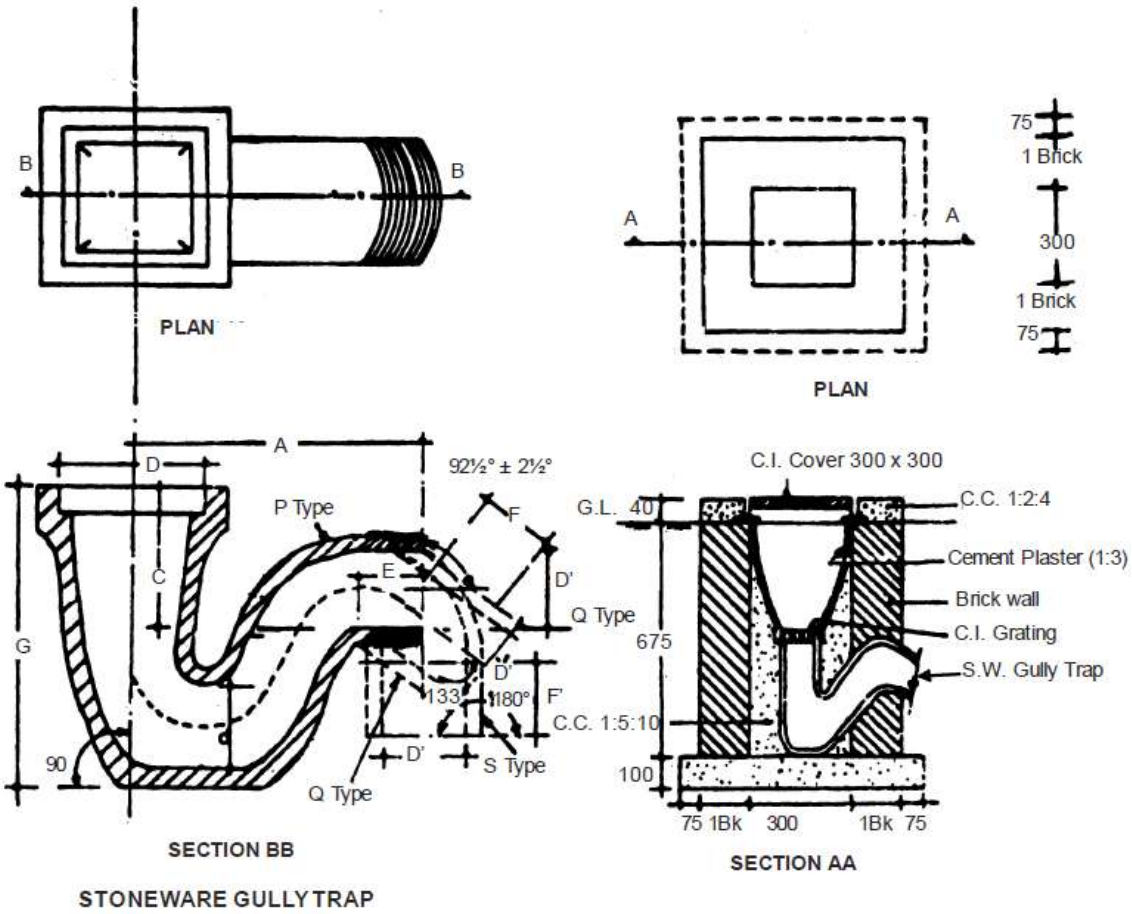

STONEWARE GULLY TRAP

Type	Size	A	C	d	D	D	E	F	F	G
P	100x100	305	175	100	100	100	65	–	–	330
	125x100	265	165	100	125	100	60	–	–	345
	150x100	330	165	100	150	100	75	–	–	346
	180x100	320	200	100	180	100	65	–	–	380
	180x150	405	270	150	180	150	75	–	–	520
Q	125x100	330	165	100	125	100	–	80	–	345
S	125x100	290	165	100	125	100	–	–	100	345
	150x100	330	165	100	150	100	–	–	115	346
	180x150	445	275	150	180	150	–	–	125	520

Drawing Not to Scale
All Dimensions are in mm

Fig. 47: Manhole (with Medium Duty Cover)

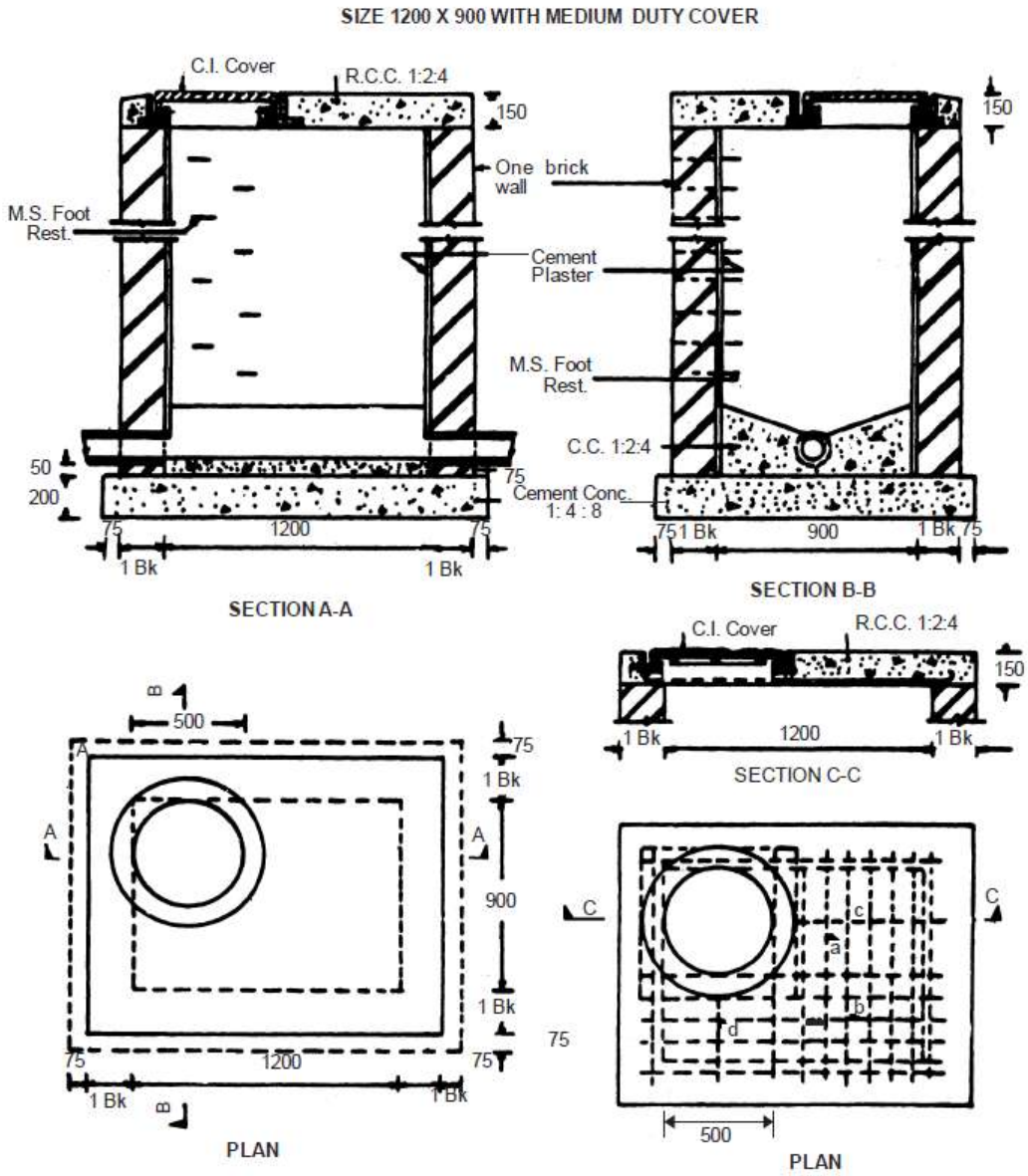

BAR BENDING SCHEDULE				
Mark	*Dia MM*	*No.*	*Length*	*Bending*
a	12	6	1300	100 ← 1100 → 100
b	12	6	1800	100 ← 1400 → 100
c	12	1	980	100 ← 780 → 100
d	12	1	680	100 ← 480 → 100

Drawing Not to Scale
All Dimensions are in mm

Fig. 48: Manhole (with Drop Connections)

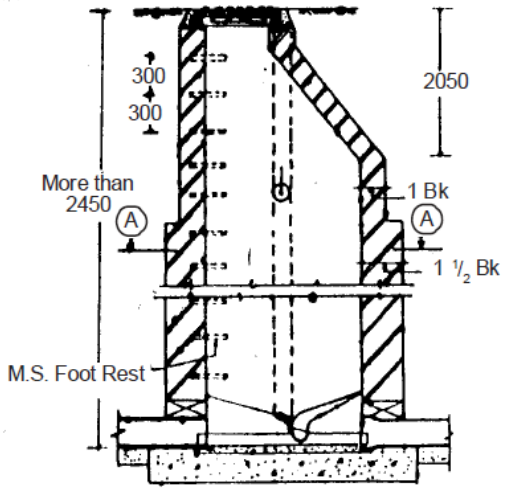

SECTION A A

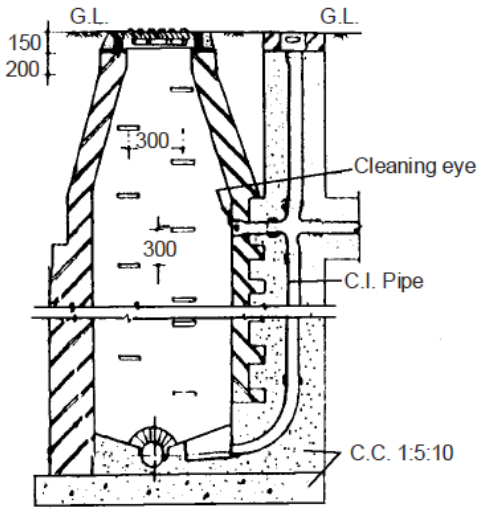

SECTION B B

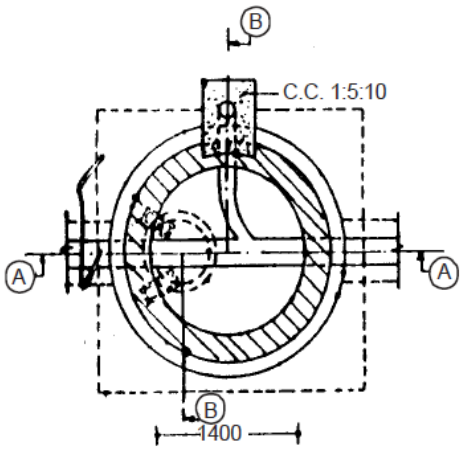

PLAN

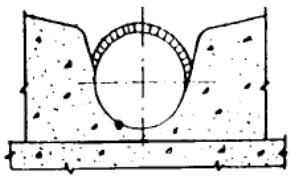

DETAIL OF BENCHING

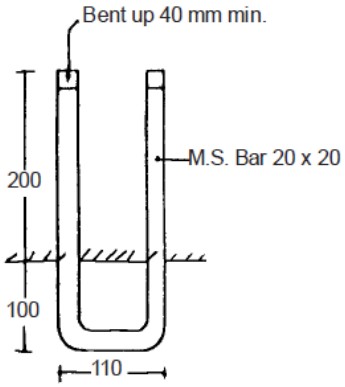

M.S. FOOT REST

Drawing Not to Scale
All Dimensions are in mm

Fig. 49: Septic Tank

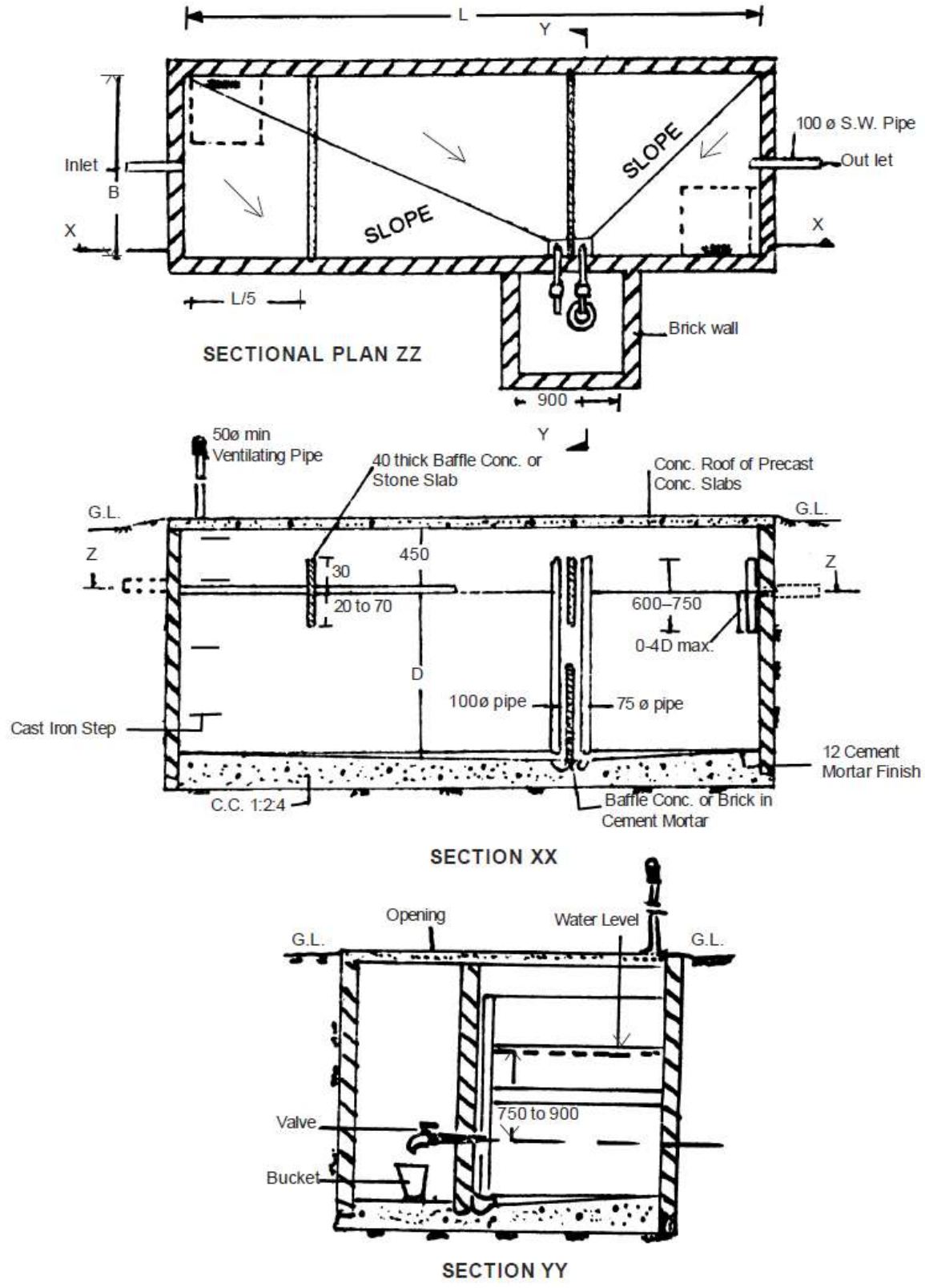

Drawing Not to Scale
All Dimensions are in mm

Fig. 50: Septic Tank (contd)

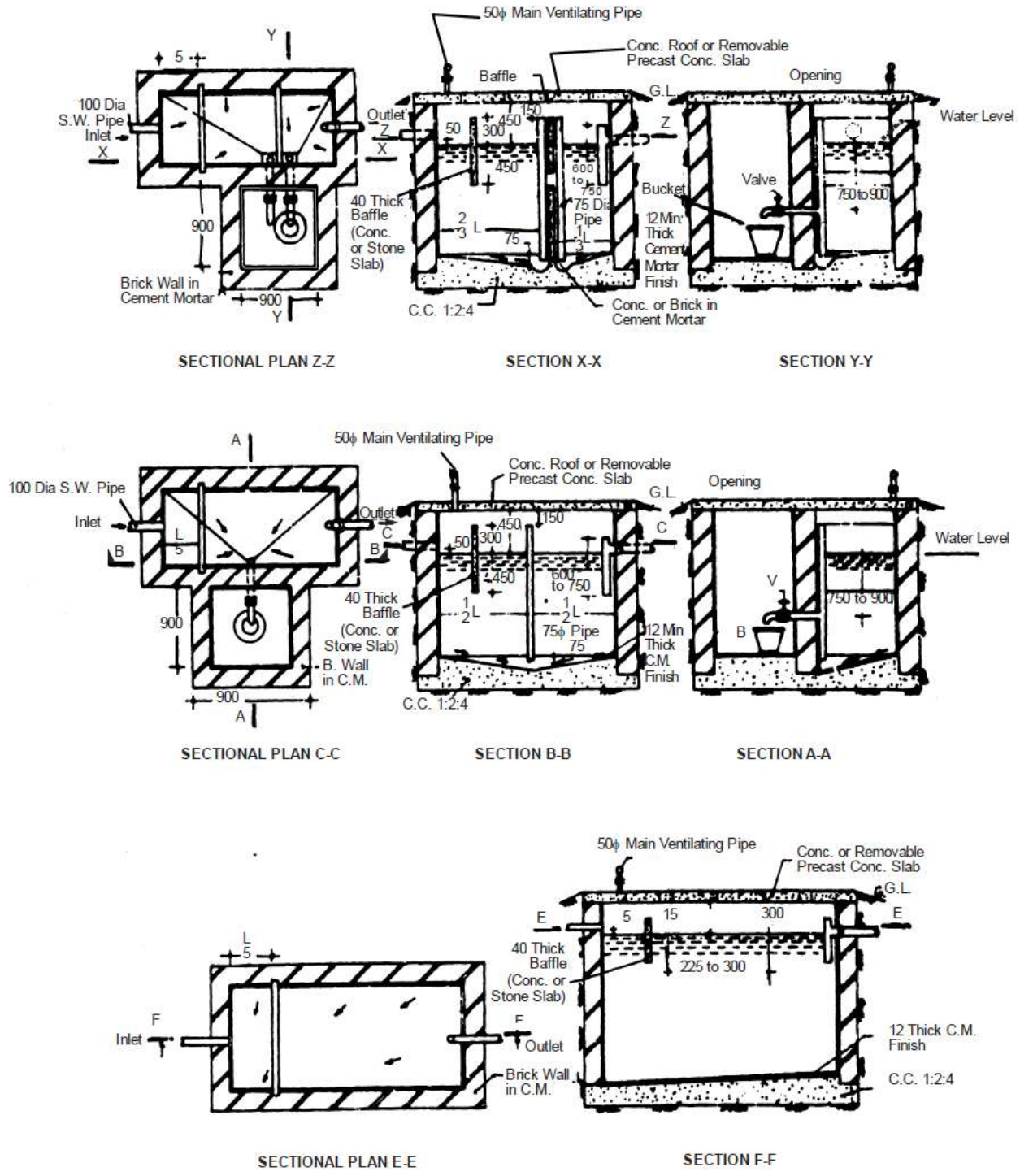

Drawing Not to Scale
All Dimensions are in mm

Fig. 51: Soak Pit

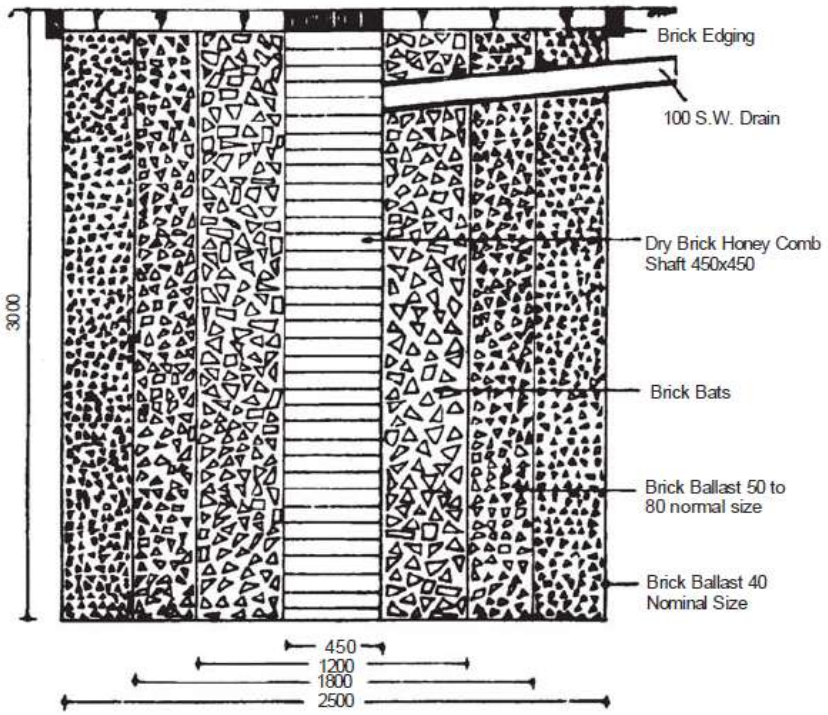

SECTION AB

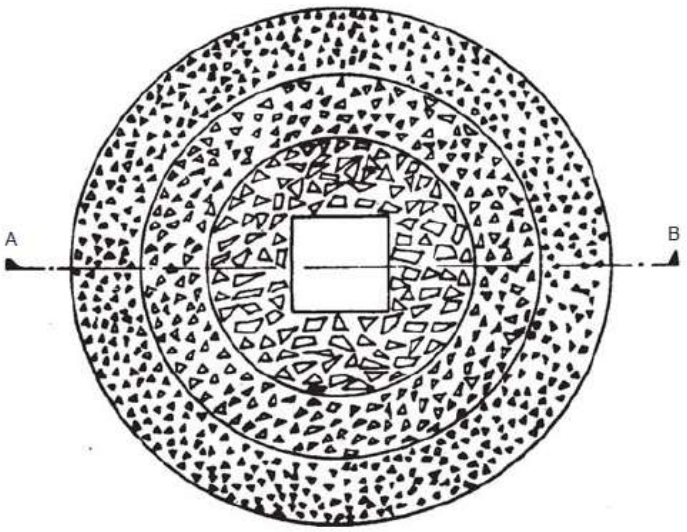

PLAN

Drawing Not to Scale
All Dimensions are in mm

Fig. 52: Typical Connection Diagram from SDB to Room Switch Board

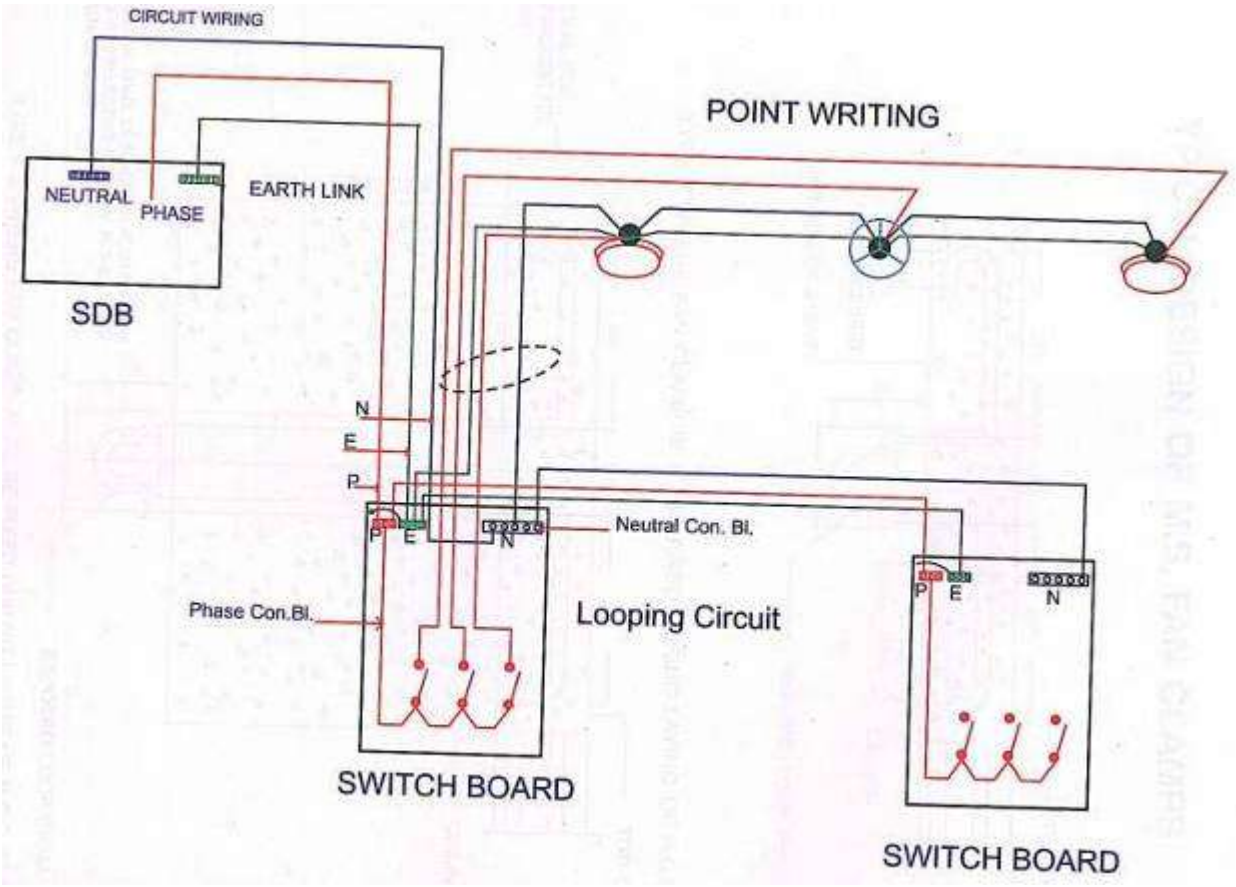

Fig. 53: Layout of Electrical Panel

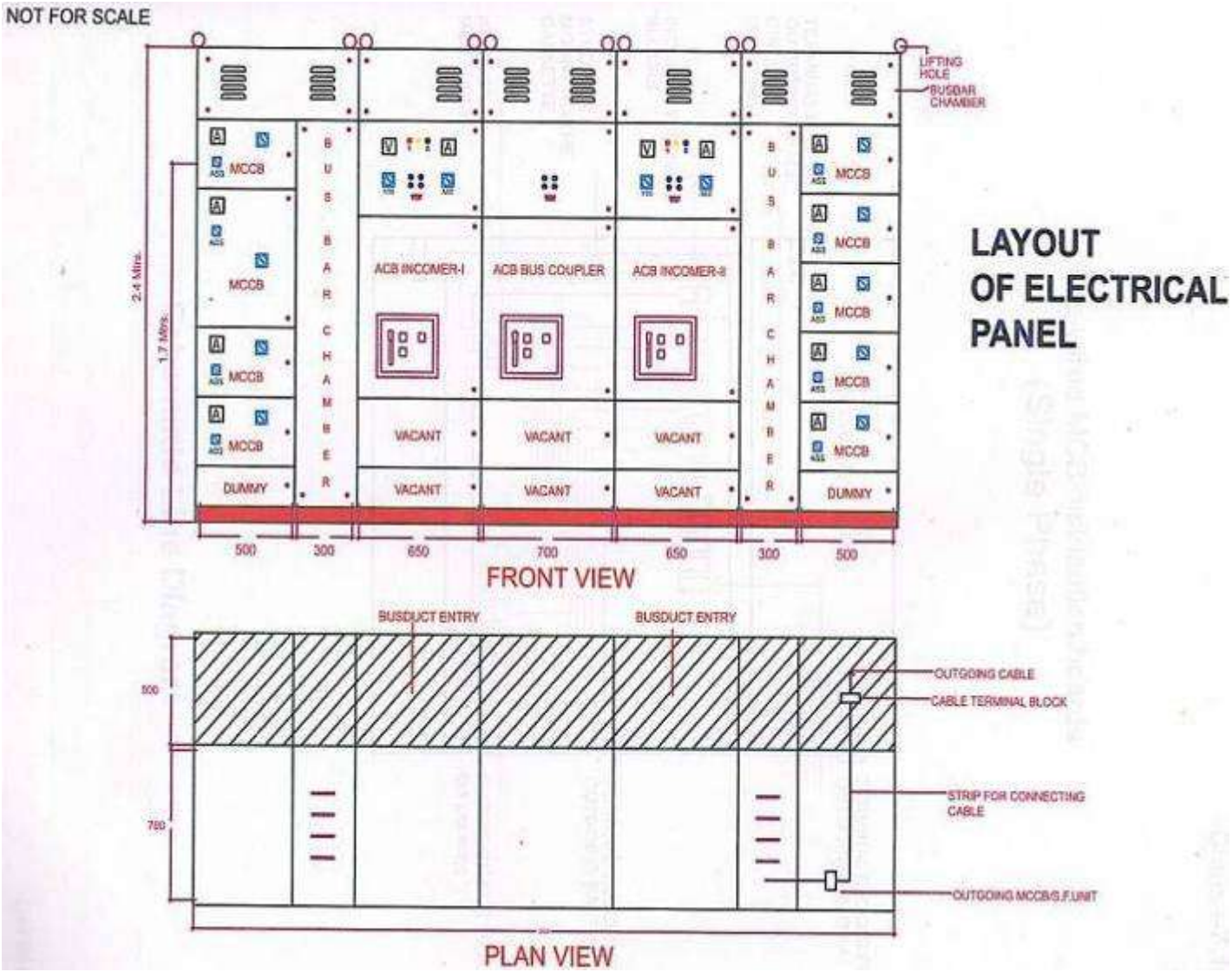

Fig. 54: Schematic Line Diagram of Pre-wired MCB Distribution Boards (Single Phase)

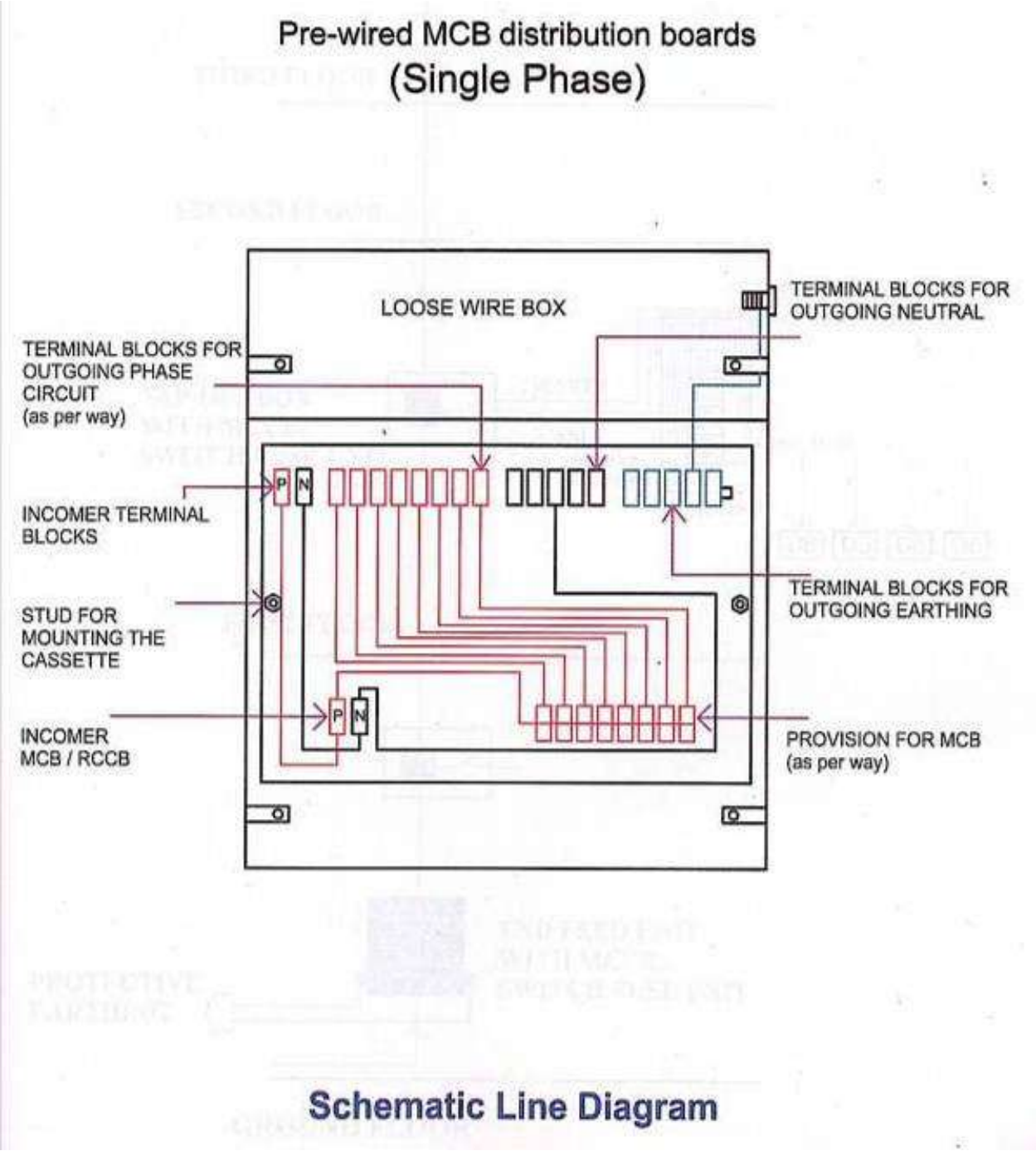

Fig. 55: Rising Main (Schematic for Power Distribution System)

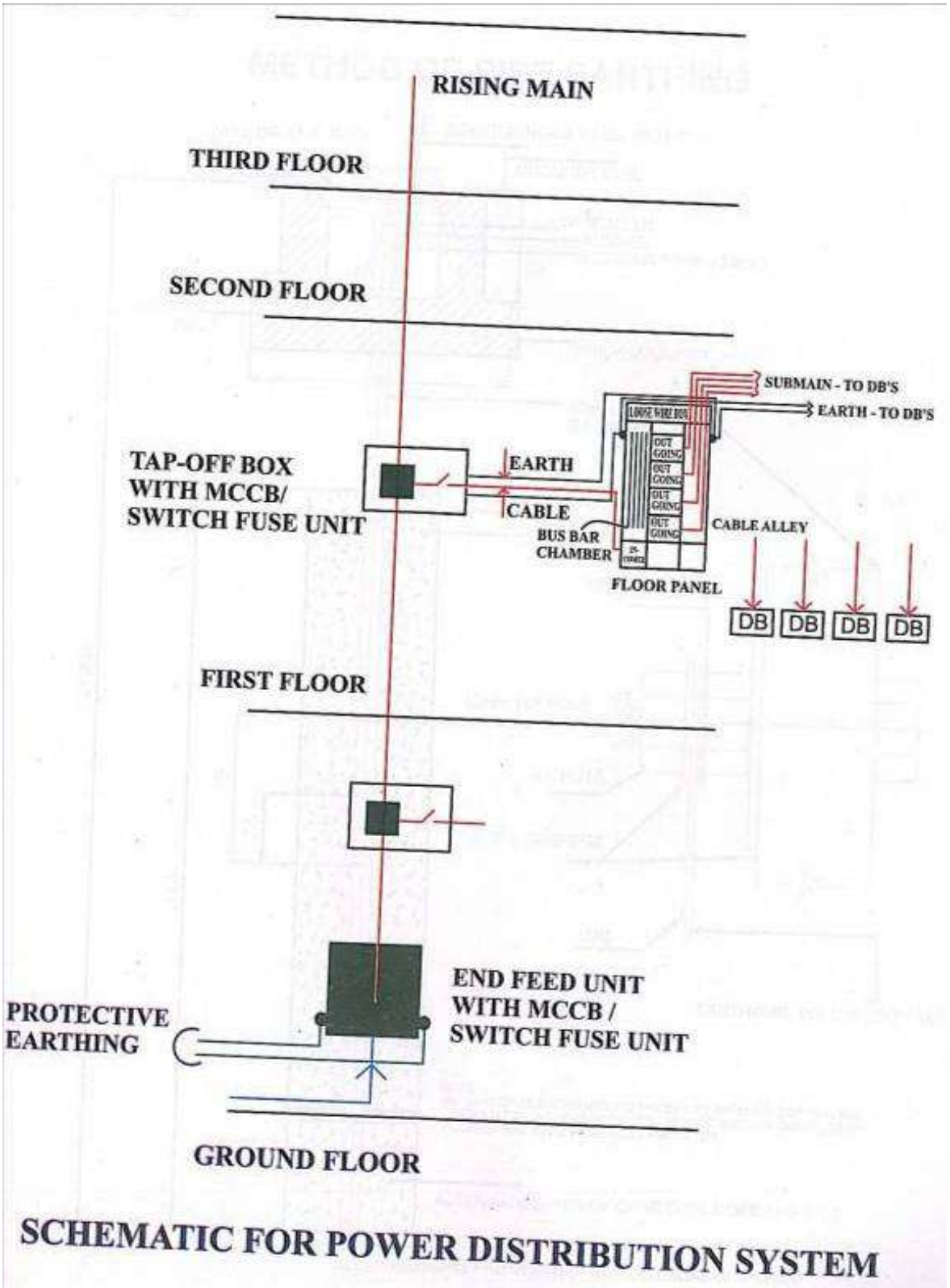

Fig. 56: Method of Pipe Earthing

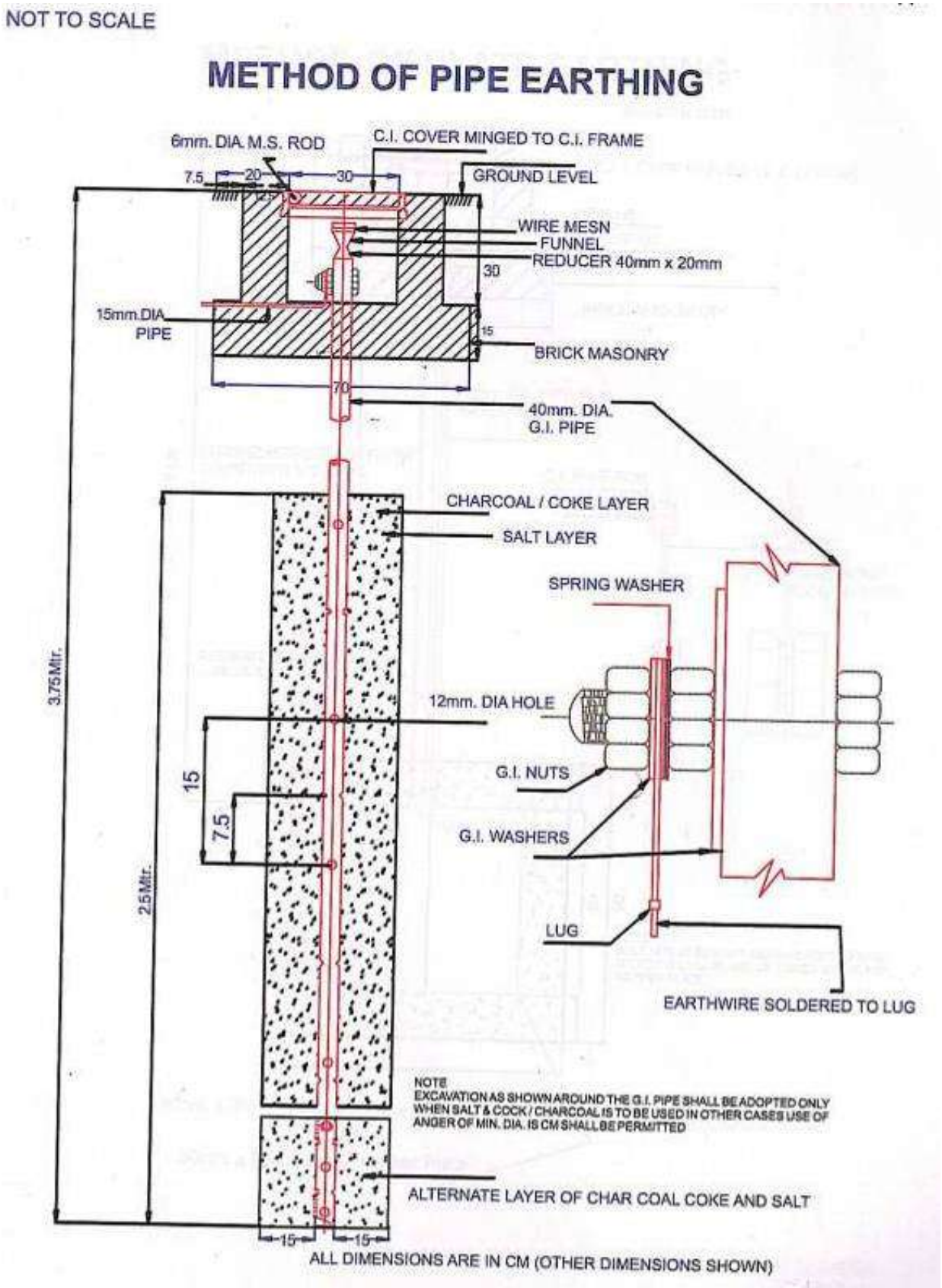

Fig. 57: Method of Plate Earthing

NOT TO SCALE

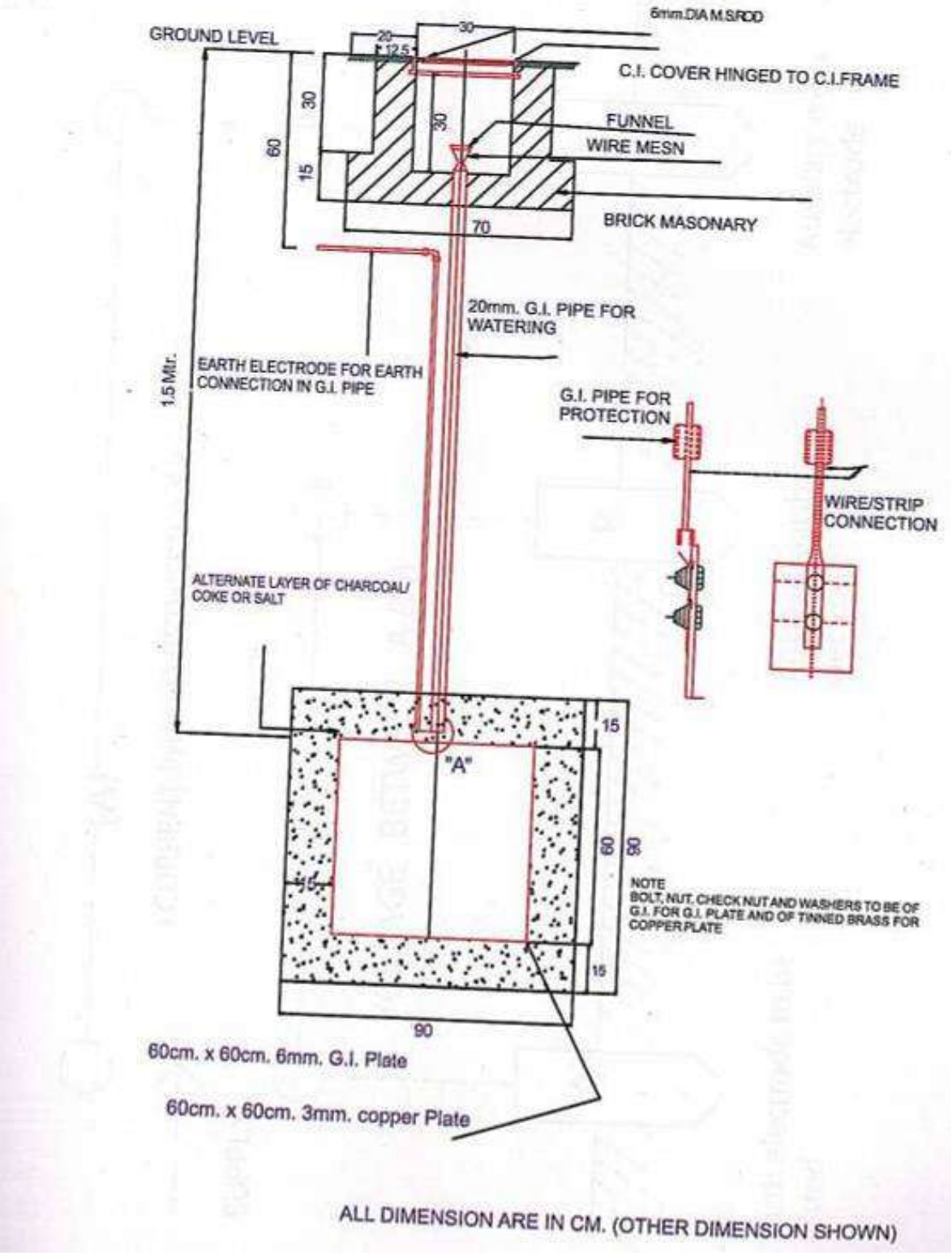

Fig. 58: Earthing Concept

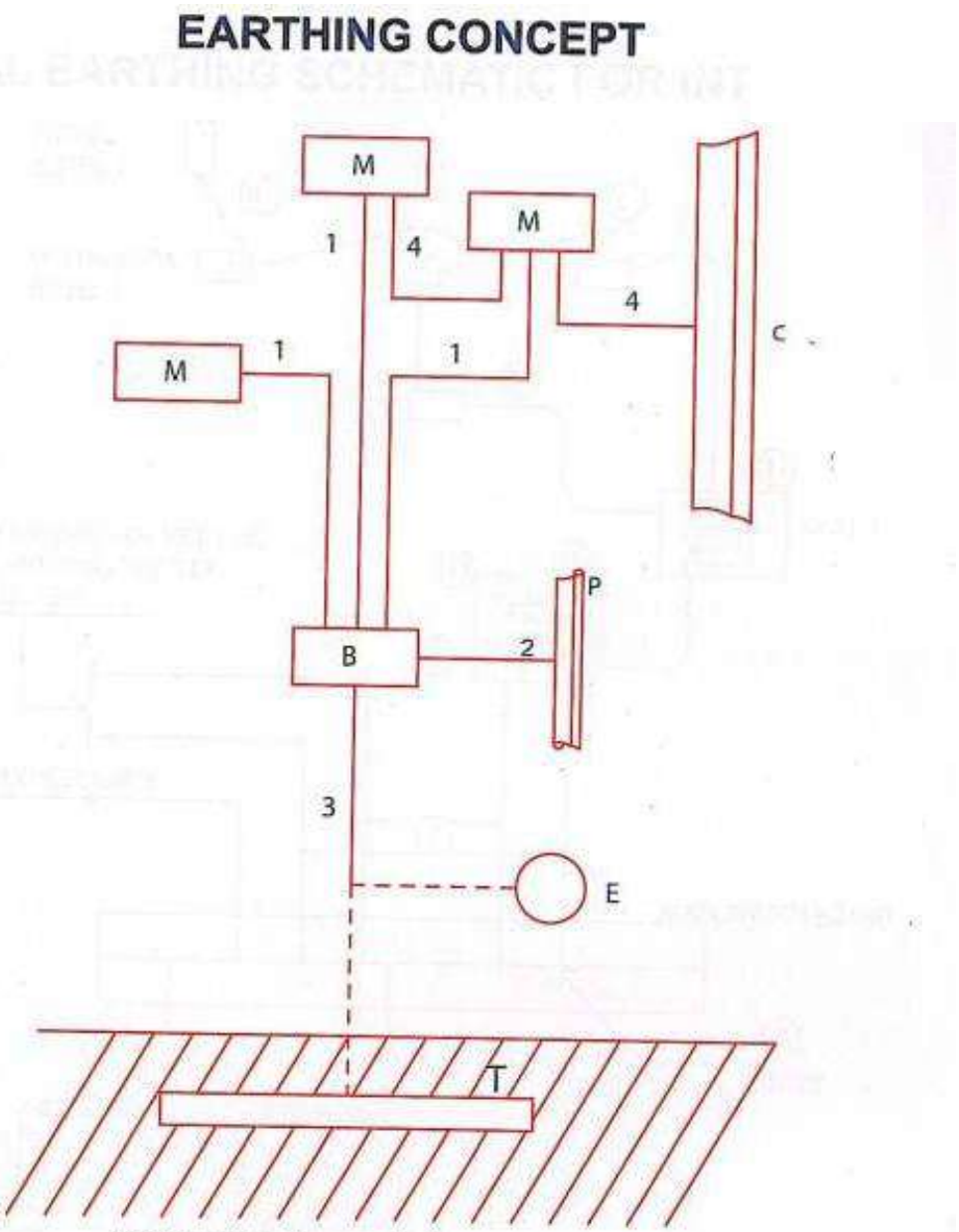

Fig. 59: Typical Earthing Schematic for Internal Electrical Installation

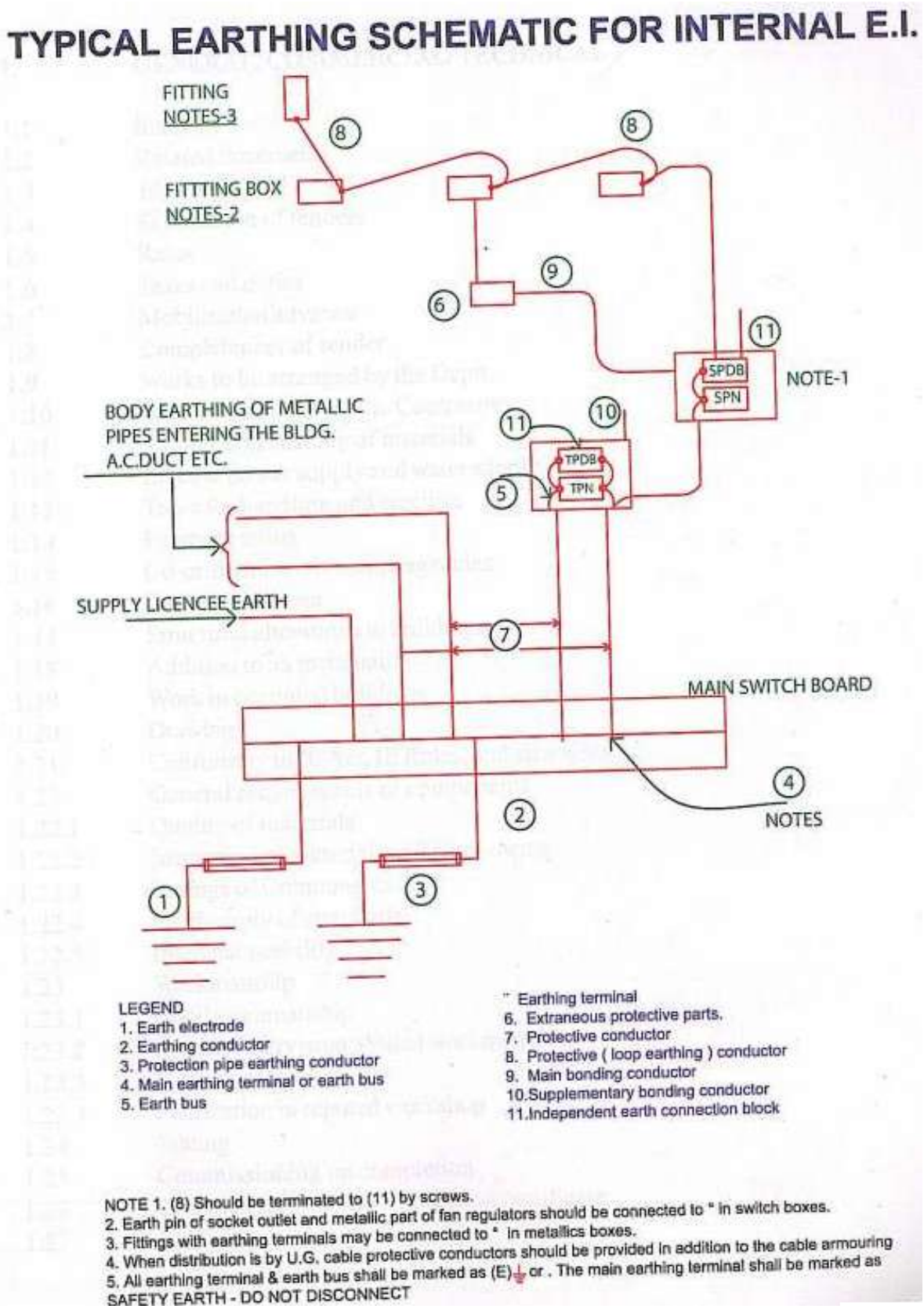

Specifications for Lifts

S.N.	SPECIAL FEATURES	ELEVATOR
1	Type of elevator	Gearless & Machine Room less
	Civil Requirements	
2	Clear Inside Shaft (required)	1500 mm WidthX 1650 mm Depth
3	Clear Inside Shaft (available)	1700 mm WidthX 1800 mm Depth
4	Pit depth	1500 mm
5	Floor to floor height (minimum)	2600 mm
6	Travel height	16.8 m
7	Headroom height	4300 mm from last landing finished floor level
8	Lintel Height (required)	2180 mm from finished floor level
9	Lockable storage room (required)	250 Sq.feet
10	Stilt area under roof (required)	200 Sq.feet
	Elevator Specifications	
11	Type of Elevator	Passenger Lift
12	No. of passengers	8
13	Rated load	544 kg
14	Number of stops	5
15	Number of Entrances	5
16	No. of Access sides	1
	Floor designations	
17	Drive system	Variable Voltage Variable Frequency Controlled
18	Type of controller	Full Collective control
19	Speed of travel	1 m/s
20	Car Size	1050 mm(W)x1300 mm (D)x2139 mm (H)
21	Door Width	800 mm
22	Door Opening Direction	Telescopic left open
23	Rated output motor PMN	3.6 KW
24	Car Design	Car walls in SS Hairline finish; Car doors in Stainless Steel; Full height mirror on rear car panel; Granite Flooring in Black Sea; SS Deco Ceil (S3300) finish
25	Landing Doors	Fully Automatic Landing doors in Stainless steel hairline finish Landing door unit integrated on top floor door frame
26	Standard Features	2 Hours Fire rated landing doors Automatic rescue device overload Pr-announcing arrows for collective controls Car and landing operating panel in touch sensitive stylish resistance glass panel Door open/close and alarm buttons Visual and acoustic confirmation of call Call acceptance Battery operated alarm bell Emergency light Position Indicator light curtain protection on doors
27	Special Features	Fireman control Voice synthesizer on car Intercom antinuisance Auto car light off. Out of service mode Attendant operation.

Water Geyser Specifications

With Coil Type Heat Exchanger (Non - Pressurized System)

1	Supply of Solar Water Heating System of capacity 2500 Ltrs per day at 60 degree on a clear sunny day comprising of ISI Marked solar flat plate collectors as follows :-
a)	**Hot Water Storage Tank** of capacity 2500 Ltrs. complete with inlet/outlet, including 1No of Ball valve, 1 No. of Temperature Gauge (Dial type), automatic air vent, The tank shall be fabricated out of Stainless Steel 304 & duly insulated with Rockwool/Glasswool insulation with aluminum cladding & MS supporting structure for solar collectors and Hot water storage tank with electric backup heaters of 27KW.
	Non Pressurized Tank with coil type heat exchanger
b)	**Laser/Ultrasonic welded** Fin-Tube copper Solar Panels, ISI marked (2.3 m^2) with necessary M.S stands, supports., C-Clamps, Gaskets Etc., with High efficient textured glass.
c)	Supply of GI piping duly insulated for system internal connection between hot water storage tank and solar collectors.

SCOPE OF SUPPLY & Installation

S.N	DESCRIPTION	QUANTITY
1	ISI marked Solar Flat Plate Collectors area with stands, supports etc. (Make- Inter Solar) With textured glass.	25 No's with each set
2	Stainless - Steel 304 Insulated Hot water Storage tank with stands (capacity 2500 ltrs.)	
3	Internal pipeline of system (between collectors & Hot Water Tank).	01 No. as per site req.
4	Ball Valves	01 No.
5	Temp. Gauge	01 No.
6	Sacrificial Anode	01 No.
7	Electrical Backup	27 KWH
8	Heat Exchanger	01 No
9	Make up Tank	01 No.
	Details of hot water Tank	
i)	Material	Stainless Steel 304 Grade
	Tank Capacity	2500 Ltrs.
ii)	Insulation thickness	100 mm
iii)	Al. Cladding	22 SWG
8.	**Make-up Tank**	1no.
i)	Material & Capacity	SS-304, 05 Ltrs
10	**Heat Exchanger**	
	Material & Type	S.S – 316, Coil Type

Technical Specifications for Bill Boards:

Technical Parameters for Bill Boards.	
Pixel pitch	10mm
Pixel density	10000 Pixels/ sqm
Module pixels(W*H)	16 Pixels(W)*16 Pixels(H)
Drive mode	constant current driving static scan
LED lamp type	Epistar DIP346 or Latest – Technique used
Cabinet resolution	96 Pixels(W)*96 Pixels(H)
Color scale	65,536 degree
View angle(H/V)	110/70 degree
Brightness (White balance)	≥7000cd/ sqm.
Power consumption(one cabinet)	Max:750W/ sqm. Average:250W/sqm.
Operating Voltage	AC100V±10% or 220V ±10%; 50---60HZ
Net weight	60 Kg / M 2 for Iron cabinet
Operating temperature	-20°C----+50°C (Customized power supply:-45°C---+60°C)
Operating humidity	10%_95%RH
Life time	≥100,000hours
MTBF	5,000 hours
Whole Display Flatness	≤0.1mm Juncture
Frame frequency	>60 Hz/s
Refresh rate	≥2000Hz /s
Control distance	100m (without repeater), single mode fiber:20km, multi mode fibre: 500m
Power	110V/220V±15% 50--60Hz
LED control system	LINSN, Dbstar, Nova-star, ZDEC, Colorlight is selectable
Operating system	Windows 2000 / Windows Xp / Windows 7
Protections for outdoor display	IP65
Maintenance way	Rear Access
Accepting signal with video processor	PAL/NTSC/SECAM,S-Video; VGA; RGB; Composite Video; SDI

Specifications for LED Video walls

Supply Installation Testing and commissioning of 10 mm SMD based outdoor LED Video Wall, high reliability ensures 24/7 operation, rugged and lightweight design with suitable mounting structure monopole /dipole/tripole as per requirement embedded with hilti bolts of appropriate size as per manufacturer recommendations and suitability of site for tropical conditions with the specifications given below. The Video wall shall be comprising of sending card of appropriate rating, Video Processer, Computer system (Intel core 2 quad, 4GB RAM, Graphic card with HDMI ports and audio output) complete in all respect as approved by the Engineer In-charge. The main Specifications of video wall are as under:-

Model:	**10 mm Surface Mounted Device based outdoor LED Video Wall**
Pixel Pitch (mm)	10 mm
LED	Nichia / Cree / Epistar
Pixel Configuration	R/G/B 3 in 1 SMD or higher
Pixel Density	(pixel/m^2) 10000 dots / sq.m or higher
Brightness (cd/m^2):	
Native (max)	7000
Calibrated	6300
Dimming Capability	100 level
Contrast Ratio	5000:1 or above
Refresh Rate	2000 HZ / sec or higher.
Colors	4.39 Trillion
Viewing Angle (°)	
Horizontal	120° or better.
Vertical	60° or better.
Display Criteria	Display shall be such that it can be clearly visible in day and night environment from a minimum distance of 200 feet
Ruggedization:	low/ high temp, salt, fog, humidity, vibration and shock.
Lifetime	100,000 Hrs. (At 50% brightness)
Power Input	AC 200V-240V 50 Hz
Control System:	
Control Mode	Synchronization
Control System	PCTV+DVI
Refresh Ratio	1920 hz / Sec.
Scan Method	1/4 scan
Bezel Gap	6.3 mm Maximum.
Temperature:	
Operation	-20° to 50° C
Storage -30°~60° C	-30° to 60° C
Relative Humidity:	
Operation	10% to 95%
Storage	10% to 95%

Service Access	Rear
IP Grade:	
Front	IP 65
Rear	IP 54
Panel :	
Cabinet	Steel
Panel Dimensions	1440 mm x 950 mm
Physical Resolutions (Panel)	144 x 96 mm
Block:	
Block dimensions	240 mm x 240 mm
Physical Resolutions	24 x 24 mm
Main Parameters:	
Color processing (Vizomo)	32 bit floating point
Compliance	ETL, FCC, CE, Rohs
Ruggedization	Mil-STD-810F for low/ high temp, salt, fog, humidity, vibration and shock.
Video Signal	RF, S-Video, RGB, RGBHV, YUV,YC, composition
Resolution	1920 x 1080
Aspect Ratio	16:09
CPU	Intel Core - 2 or equivalent, 4 GB RAM, 500 GB SATA Hard disk, 1 GB GBVIDIA Graphic card with HDMI port, USB Port and Serial Port compatible with sending card and Video processor.

The design of the display board shall be such that all associated components, electronic parts and display segments shall be of modular in nature so that in case failure of one part / parts, the display board keeps on working and the defective part/parts can be removed easily for repair/replacement without affecting the functioning of the display board.

All setting and configurations for parameter display and sequence operation of various display parameters requirement shall be done through a PC based data acquisition system with necessary software and hardware installed. Configuration/settings of parameters of the display board via other means are not acceptable.

Data acquisition Software:

Vendor to provide Windows OS compatible GUI based data acquisition software, installed and fully licensed in favour of IDIPT, with following features and functionality (at least) along with the offered PC based data acquisition system. All setting and configurations for parameter display and sequence operation of various display parameters as per project requirement shall be done through the PC based data acquisition system software.

Accessories:

Non-reflecting, Flicker free no permanent Image retention/burn-in due to prolonged display of the same picture at the same place. The brightness in the centre of the screen and the edges of the screen is uniform and there is no perceivable difference in the quality of the picture on the centre and on the edges of the screen

Civil Structure:	All civil Construction required for installation of Video wall including but not limited to Mounting structures, Pole etc, Electrical Fittings. The contractor has to submit structural Stability certificate with structural design for proposed structure.

Detail Engineering: As part of detailed engineering the following shall be carried out:	• Field side lay out drawing • Complete cable schedule. • Complete system configuration details. • Complete wiring diagram. • Electrical Load calculation. • Dimensional details of the offered / supplied items. • System configuration. • Dimensional details of the mounting arrangement of the offered/ supplied items

Damage during commissioning/ erection/ installation: If during commissioning stage, under the supervision of vendor, any item is found to be damaged/ out of order, same shall be replaced by vendor immediately without any schedule and cost implication to IDIPT.

Formats:	The LED Screen should compatible to execute Widely Used Image (JPEG/JPG, PNG, GIF, TIFF), Video Formats (WMV, FLV, MP4, MOV, AVI, MPEG), Animation Files (SWF or SWF in ZIP), Interactive content and Interactive applications, DOC, XPS, PPT, ppsx, pps (*MS Office to be installed on player), web links for direct display of website and other online contents, RSS and ticker, Audio Content (.mp3, .mp4a, .asc, .wma).
Audio Systems:	Shall include the following scope of work: Audio System For LED Wall shall be Multiple Array System -compact, active and modular "all-in-one" Multiple Array system which combines PA and monitoring system Protective cover Castor Board Transport bag with carrying strap, padding, and zipper for optimal protection of the column speaker. Max. SPL (continuous) – 115 dB Frequency response: - 45 - 20,000 Hz Dispersion (H x V): - (horizontal) 120° Low/mid driver - 2 x 8" Woofer magnet – Ferrite Midrange size - 16 x 3" Midrange size: - 16 x 76 mm Tweeter dimensions: -1" Mid/Hi system cabinet - aluminium Amplifier: - 5-way Class A/B Amplifier Output - 1600W Protection circuits - Dual limiter Cooling: - Aluminium heat sink Line input connectors: - XLR, 6.3 mm Jack, RCA Cable Connector Hardware - Of All Required Hardware Cable Connector For Fixing Video Wall - Establishment of Server Room Along With 2 Way PA System Connectivity

Drawings

The bid drawings for the package Construction of the Work of "**Creation of Tourist Cultural Centre, Janjehli, District Mandi**", to be followed are listed as under and attached. These drawings are for guidance purpose only and detailed drawings shall be issued at the time of execution.

S.N.	Drawing Title	Drawing No.
1	Site Plan	HP/CULTURAL CENTRE - JANJHELI /SITE PLAN/01
2	FOOD COURT - FLOOR PLANS	HP/CULTURAL CENTRE - JANJHELI /FOOD COURT/01
3	FOOD COURT - ELEVATIONS, SECTIONS, BASEMENT FLOOR PLAN & ROOF PLAN	HP/CULTURAL CENTRE - JANJHELI /FOOD COURT/02
4	FOOD COURT - DOOR AND WINDOW DETAILS	HP/CULTURAL CENTRE - JANJHELI /FOOR COURT/DWS/01
5	CONVENTION BLOCK - FRONT ELEVATION & GROUND FLOOR PLAN	HP/CULTURAL CENTRE - JANJHELI /CONVENTION/01
6	CONVENTION BLOCK - FIRST FLOOR PLAN & L.H.S ELEVATION	HP/CULTURAL CENTRE - JANJHELI /CONVENTION/02
7	CONVENTION BLOCK - SECOND FLOOR PLAN & SECTION AT A-A - ELEVATION	HP/CULTURAL CENTRE - JANJHELI /CONVENTION/03
8	CONVENTION BLOCK - ROOF PLAN	HP/CULTURAL CENTRE - JANJHELI /CONVENTION/04
9	CONVENTION BLOCK - DOOR AND WINDOW DETAILS - 1	HP/CULTURAL CENTRE - JANJHELI /CONVENTION/DWS/01
10	CONVENTION BLOCK - DOOR AND WINDOW DETAILS - 2	HP/CULTURAL CENTRE - JANJHELI /CONVENTION/DWS/02
11	CONVENTION BLOCK - DOOR AND WINDOW DETAILS - 3	HP/CULTURAL CENTRE - JANJHELI /CONVENTION/DWS/03
12	COTTAGE BLOCK - GROUND FLOOR PLAN	HP/CULTURAL CENTRE - JANJHELI /COTTAGE/PLAN/01
13	COTTAGE BLOCK - FIRST FLOOR PLAN	HP/CULTURAL CENTRE - JANJHELI /COTTAGE/PLAN/02
14	COTTAGE BLOCK - ROOF PLAN	HP/CULTURAL CENTRE - JANJHELI /COTTAGE/PLAN/03
15	COTTAGE BLOCK - SECTION AT A-A & SECTION AT B-B	HP/CULTURAL CENTRE - JANJHELI/ COTTAGE/ SECTION/ 01
16	COTTAGE BLOCK - FRONT & REAR ELEVATION	HP/CULTURAL CENTRE - JANJHELI /COTTAGE/ELEVATION/01
17	COTTAGE BLOCK - R.H.S ELEVATION	HP/CULTURAL CENTRE - JANJHELI /COTTAGE/ELEVATION/02
18	COTTAGE BLOCK - DOOR AND WINDOW DETAILS	HP/CULTURAL CENTRE - JANJHELI /COTTAGE/DWS/01
19	GAZEBO DETAIL	HP/CULTURAL CENTRE - JANJHELI /GAZEBO/01

S.N.	Drawing Title	Drawing No.
20	WATER TANK TOWER AND GAURD HUT	HP/CULTURAL CENTRE - JANJHELI /TANK TOWER/01
21	BRIDGE DETAILS	HP/CULTURAL CENTRE - JANJHELI /BRIDGE/01
22	TOILET BLOCK	HP/CULTURAL CENTRE - JANJHELI /TOILET BLOCK/01
23	RAIN SHELTER	HP/CULTURAL CENTRE - JANJHELI /RAIN SHELTER/01
24	TYPICAL TRUSS DETAIL (TR - A)	HP/CULTURAL CENTRE - JANJHELI /DETAIL/TRUSS TRA/01
25	TYPICAL TRUSS DETAIL (TR-B)	HP/CULTURAL CENTRE - JANJHELI /DETAIL/TRUSS TRB/01
26	TYPICAL DOOR DETAIL	HP/CULTURAL CENTRE - JANJHELI /DETAIL/DOOR/01
27	WOODEN ORNAMENT TYPICAL DETAIL (C)	HP/CULTURAL CENTRE - JANJHELI/ DETAIL/ ORNAMENT/ 01
28	TYPICAL WALL CLADDING DETAIL (E)	HP/CULTURAL CENTRE - JANJHELI /DETAIL/CLADDING/01
29	TYPICAL WALL CLADDING AT WINDOWS DETAIL (E)	HP/CULTURAL CENTRE - JANJHELI /DETAIL/CLADDING/02
30	TREKKERS HOSTEL - BLOCK 1	HP/CULTURAL CENTRE - JANJHELI /TREKKER - BLOCK 1/ 01
31	TREKKER HOSTEL - BLOCK 2 - GROUND FLOOR PLAN	HP/CULTURAL CENTRE - JANJHELI /TREKKER - BLOCK 2/ 01
32	TREKKER HOSTEL - BLOCK 2 - FIRST FLOOR PLAN	HP/CULTURAL CENTRE - JANJHELI /TREKKER - BLOCK 2/ 02
33	TREKKER HOSTEL - BLOCK 2 - ROOF PLAN	HP/CULTURAL CENTRE - JANJHELI /TREKKER - BLOCK 2/ 03
34	TREKKER HOSTEL - BLOCK 2 - ELEVATION AND SECTION	HP/CULTURAL CENTRE - JANJHELI /TREKKER - BLOCK 2/ 04

Note: Detailed Drawings can be seen in the Office of the Project Director, IDIPT-HP at the address mentioned in the Bid Document.

Supplementary Information Regarding Works To Be Procured

The following supplementary information for the work of "**Creation of Tourist Cultural Centre, Janjehli, District Mandi**", is provided for reference of the Bidder.

A. Location:

The picturesque Janjehli is situated at an elevation of 2150[1] Mtr. A lush green valley with agricultural fields in gentle slopes, apple orchards, hills covered with pine and deodar trees and a small river having crystal clear water moving like a snake through various criss-crossed hills Janjehli along with adjoining Keolidhar, Bagsaid valleys are a gift of nature to this district. Janjehli is loved by trekker and nature lover alike. The valley adorned by snow during winters, is no less than heaven on the earth. The art lovers must have glimpses of traditional wood carving and metal work. Visit to Janjehli is not complete without having blessing of Shikari Mata. Budha Kedar is situated at an altitude of 9000 feet. Budha Kedar can be visited by trekking a distance of 4 Kms from HPTDC Trekker's Hostel at Kataroo near Janjehli. The place is endowed with natural beauty. Deodar trees, streams of crystal clear water attract the tourists. The traditions have it that during exile Pandavs came here and saw Nandi at this place. Nandi jumped on a rock to save itself from Bhima of Mahabharata and disappeared through the rock. The hole has the shape of the back of the bull. People worship at this place and take holy bath in the nearby stream. Pandav Shila (Rock) is situated just 3 Kms ahead of Janjehli village on the bank of Bhekhli Khad in village Dhar Jarol Pandav Shila is believed to be of Mahabharata era. People believe that if a pebble thrown on the rock stays on it their wishes are fulfilled. It is also said that a person with true belief can have slight movement by hand push on the top of the rock.

B. Description of the Sub-project

The intended objectives of the Project are :

i. To improve the infrastructural status of the area, along with landscaped garden.

ii. To preserve, nurture and promote the local culture, local skills and traditional crafts, arts and food and thereby to improve the economic status of artisans and craftsmen vis-à-vis the local community.

iii. To facilitate showcasing and selling the products generated by the craftsmen of the region.

iv. To propagate and publicise traditional crafts, music and food products of the region by setting up of commercial outlets and construction of Convention Centre/Hall.

v. To provide opportunities for local communities, particularly women groups, linked to the cultural and natural heritage tourism and to generate and improve livelihood opportunities for local communities

vi. Enabling the management for maintaining the site through regular stakeholder & public participation and also help the local people connect with their town's heritage.

vii. It is expected that the above interventions will bring about infrastructure development and improve economy of the region.

viii. The project will help to boost the economy of the State as well as local people of Janjehli area.

ix. It will be a new sought out tourist destination and divert the traffic inflow in Mandi / Manali towns as well as major tourist's destination of the Sate.

By constructing the Infrastructure in the area, more tourists will enjoy the adventure activities along with Himachali Cuisine.

[1] Source : http://himachal.nic.in/index1.php?lang=1&dpt_id=199&level=1&sublinkid=12078&lid=12480 accesed on 12/01/2018

C. Subproject Component:

Subproject Package HPTDB/15/2 is one of the subprojects to support tourist clusters inclusive of management-plan/master-plan based investments (IDIPT Output 1) and support improvement of basic tourist facilities and amenities for tourist attractions. The scope of the subproject comprises of three components as described below:

A. **Tourist Cultural Centre at Janjheli**: Following works are proposed to be undertaken under this component:

i. Visitor Blocks
ii. Convention Center Building
iii. Restaurant Cum OAT
iv. Open Parking, Approach Roads & Paths
v. Gazebo
vi. Bridge
vii. Water Front Development & Check Dams
viii. Outer Compound Wall/Fencing and Toe Walls/ Retaining Walls & River Front Development and Check dam
ix. Elevator
x. Land Scaping Works
xi. Toilet Blocks - Jhinjeli - 2 No's
xii. Rain Shelter - Jhinjeli - 2 No's
xiii. Trekking Hostel Renovation
xiv. SWISS Tents 5 Nos
xv. Water supply and sanitary installation
xvi. Electrical, Fire fighting, CCTV, EPBAX, DG Set and Transformer
xvii. Septic Tank for Swiss Tents
xviii. Rain Water Harvesting Tank , Fire fighting Tank, UGWT, Soak pit and Septic tank.
xix. Pre fabricated Security Cabin
xx. Improvement of Area around Pandav Shila

B. Trekkers Hostel at Thunag:

i. Trekking Hostel – Thunag
ii. Soak pit and Septic Tank for Thunag Hostel

C. Allied works around surrounding areas of the project

i. Improvement of Steps, Provision of Railings, Sitting Benches, Trek and Renovation of existing Sarai

D. Confirmatory Surveys

The successful bidder shall perform a confirmatory survey of the project at their own cost before commencement of the actual work at site.

E. Designs

The successful Bidder shall design (based on items in BOQ) at their own cost for lighting system, electrical system and paneling for acoustic system and get it approved from the Client before execution of works. The designer shall also be responsible for supervision of the said work and ensure that the said works are in conformity with the approved drawings. No extra payment shall be made by the client for design and supervision of such works.

F. Bill of Quantities

The items and the respective quantities given in the Bill of Quantities (BOQ) are provisional. The Employer has the right to change (increase / decrease) the quantities as per the requirement / site conditions. The Employer may also skip any of the line items in the BOQ or any sub-component

without executing the same as per the requirement. The Employer may also change the specification of any item and finalize the prices of new items as per the requirements. The bidders cost shall include all applicable taxes, cost of disposal of debris / construction waste to the disposal site and levies (if any). No additional cost shall be given for the same.

G. IEE / RP / DDR

Appendix 6.1 & 6.2 – Environmental Management Plan (Abstract of Initial Environmental Examination) / Due Diligence Report (DDR) / Resettlement Plan (RP) as attached in the Documents should be read as draft. After final approval by the competent authority, the same will be used for implementation.

Personnel Requirements

Using Form PER-1 and PER-2 in Section 4 (Bidding Forms), the Bidder must demonstrate it has personnel that meet the following requirements:

The Bidder must demonstrate that it has the personnel for the key positions that meet the following requirements:

S.N	Position with minimum qualification	Requirement	Total Work Experience [years]	Experience In Similar Work [years]
1	Project Manager (Degree in Civil Engineering)	One	15 years	7 years
2	Construction Engineer (BE in Civil Engg.)	One	10 Years	5 Years
3	Electrical Engineer / Mechanical Engineer (BE in Electrical / Mechanical Engg.)	One	7 Years	3 Years
4	Quality Control / Quality Assurance Engineer (Degree in Civil Engineering)	One	7 years	3 years
5	Works Supervisor (Diploma in Civil Engg)	Two	10 Years	5 years
6	Work Supervisors (Diploma in Electrical/Mech Engg)	One	7 years	3 years
7	Safety Inspector (Graduate)	One	7 years	3 years

The Bidder shall provide details of the proposed personnel and their experience records in the relevant Information Forms included in Section 4 using one form for each personnel (Bidding Forms Technical).

Equipment Requirements

Using Form EQU in Section 4 (Bidding Forms), the Bidder must demonstrate it has the key equipment listed below:

The Bidder must demonstrate that it has the following key equipment listed hereafter:

S.N.	Equipment Type and Characteristics	Min. Number Required
1	JCB/ Excavators & loader /Earth Mover	One no.
2	Concrete Mixer with Digital System min 500 lit capacity	One no.
3	Concrete Mixers (Large Sized)	Three nos.
4	Needle Vibrators (mix sizes)	Six nos.
5	Diesel Generators (15KVA)	Two nos.
6	Water Tankers with Tractors (Minimum 2KL Capacity)	One no.
7	Welding Machines	One set
8	Concrete test moulds (size 150X150X150mm)	16 nos.
9	Laboratory testing equipment for concrete and bitumen	One set
10	Compression testing equipment	One no.

* Bidders shall give the proof of ownership details of plant / lease agreement

The Bidder shall provide further details of proposed items of equipment using the relevant Form in Section 4 (Bidding Forms Technical).

Drawings

Blank Page

SITE PLAN

SCALE 1:300

NORTH

ORIENTATION	**NOTE** 1. ALL THE DIMENSIONS ARE IN M. UNLESS SPECIFIED. 2. THIS DRAWING IS FOR ARCHITECTURAL PURPOSE ONLY. 3. ANY DOUBT OR DESCRIPANCY IN THE DRAWING SHALL BE BROUGHT TO THE NOTICE OF THE ARCHITECT IN CHARGE BEFORE EXECUTING THE WORK. 4. THE DRAWING SHALL BE READ IN CONJECTION WITH RELEVANT STRUCTURAL DRAWINGS ALONG WITH RESPECTIVE DRAWINGS AND SPECIFICATIONS. 5. THE DRAWING IS FOR TENDER PURPOSE. ACTUAL DRAWINGAS WILL BE ISSUED DURING CONSTRUCTION AND MAY VARY AS PER SITE CONDITONS LIKE SPACE AVAILABILITY,TREES,ADJOINING BUILDING,SERVICE LAYOUT,ETC.	**ARCHITECT (PMDSC)** MR.DUNI CHAND **DRAWN & DEALT BY** MR.HIMANSHU	**TEAM LEADER (PMDSC)** MR.SUNIL KOUL **PROJECT MANAGER (PIU)** ER. RAKESH ARORA	**CONSULTANT** IPE GLOBAL **IPE GLOBAL LTD.** PROJECT MANAGEMENT CONSULTANT FOR I.D.I.P.T. FOR TOURISM, HIMACHAL PRADESH	**ARCHITECT(PMU)** AR. SAROJINI SHARMA **TECHNICAL CONSULTANT**	**EXECUTIVE ENGINEER(PMU)** ER. R.K. SHRIDHAR **PROJECT DIRECTOR** MR. MANOJ SHARMA	**CLIENT** IDIPT-HPTDB **PROJECT** IDIPT-HP (PROJECT1)	**PACKAGE** CREATION OF TOURIST CULTURAL CENTRE AT JANJHELI, DISTT. MANDI, (H.P.). PACKAGE NO. 15/2	**DRAWING TITLE** SITE PLAN	**DRAWING NO.** HP/CULTURAL CENTRE - JANJHELI /SITE PLAN/01 **DATE :-** 13/04/2018 **SCALE:-** 1:75

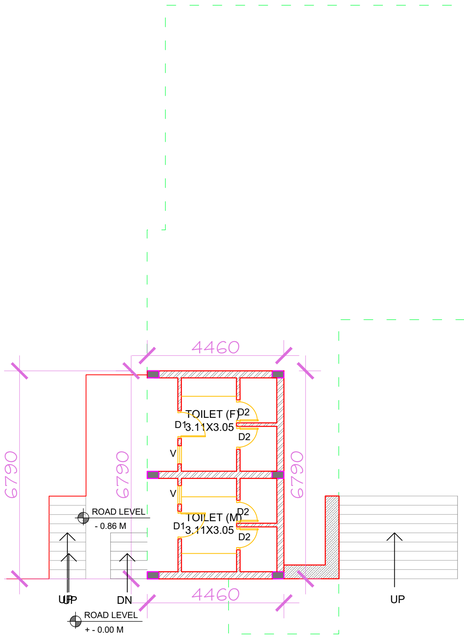

BASEMENT FLOOR PLAN

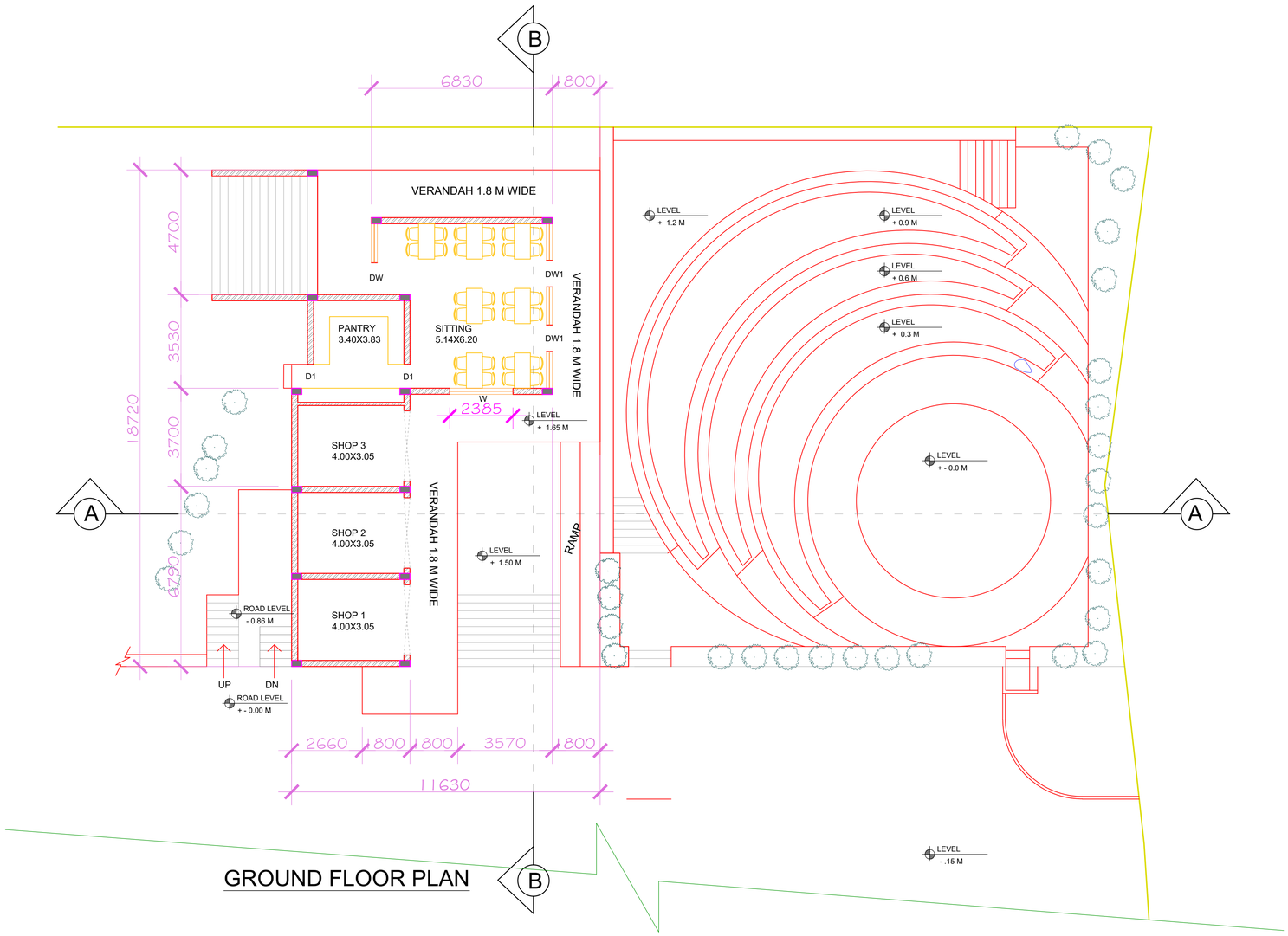

GROUND FLOOR PLAN

ORIENTATION	**NOTE** 1. ALL THE DIMENSIONS ARE IN MM. UNLESS SPECIFIED. 2. THIS DRAWING IS FOR TENDER PURPOSE ONLY. ACTUAL DRAWINGS WILL BE ISSUED DURING CONSTRUCTION AND MAY VARY AS PER SITE CONDITONS LIKE SPACE AVAILABILITY,TREES,ADJOINING BUILDING,SERVICE LAYOUT,ETC. 3. ANY DOUBT OR DESCRIPANCY IN THE DRAWING SHALL BE BROUGHT TO THE NOTICE OF THE ARCHITECT IN CHARGE BEFORE EXECUTING THE WORK. 4. THE DRAWING SHALL BE READ IN CONJECTION WITH RELEVANT STRUCTURAL DRAWINGS ALONG WITH RESPECTIVE DRAWINGS AND SPECIFICATIONS.	**ARCHITECT (PMDSC)** MR. DUNI CHAND **DRAWN & DEALT BY** MR. HIMANSHU	**TEAM LEADER (PMDSC)** MR.SUNIL KOUL **PROJECT MANAGER (PIU)** ER. RAKESH ARORA	**CONSULTANT** IPE GLOBAL **IPE GLOBAL LTD.** PROJECT MANAGEMENT CONSULTANT FOR I.D.I.P.T. FOR TOURISM, HIMACHAL PRADESH	**ARCHITECT(PMU)** AR. SAROJINI SHARMA **TECHNICAL CONSULTANT**	**EXECUTIVE ENGINEER(PMU)** ER. R.K. SHRIDHAR **PROJECT DIRECTOR** MR. MANOJ SHARMA	**CLIENT** IDIPT-HPTDB **PROJECT** IDIPT-HP (PROJECT1)	**PACKAGE** CREATION OF TOURIST CULTURAL CENTRE AT JANJHELI, DISTT. MANDI, (H.P.). PACKAGE NO. 15/2	**DRAWING TITLE** FLOOR PLANS	**DRAWING NO.** HP/CULTURAL CENTRE - JANJHELI /FOOD COURT/01 **DATE :-** 13/04/2018 **SCALE:- 1:75**

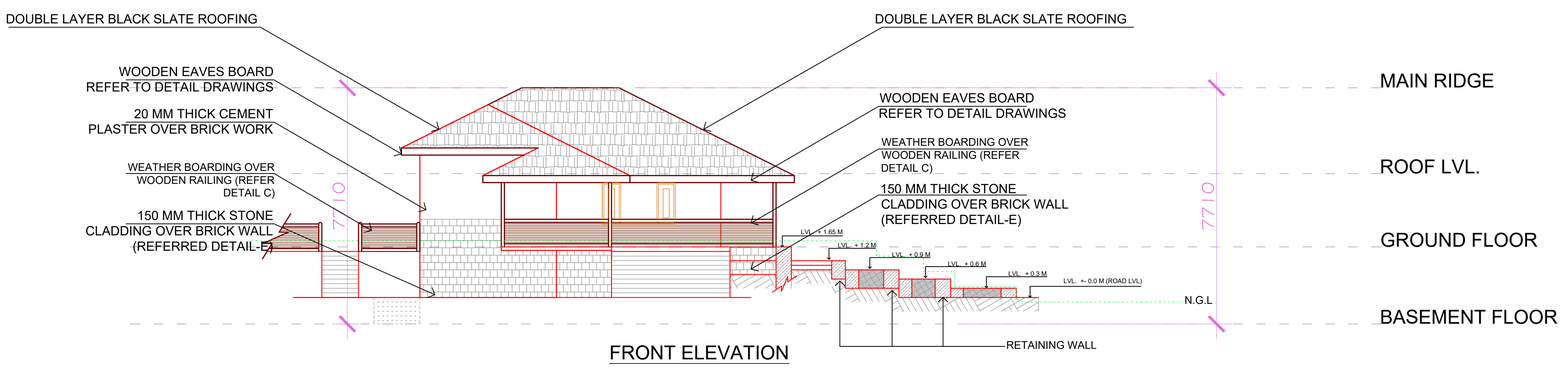

FRONT ELEVATION

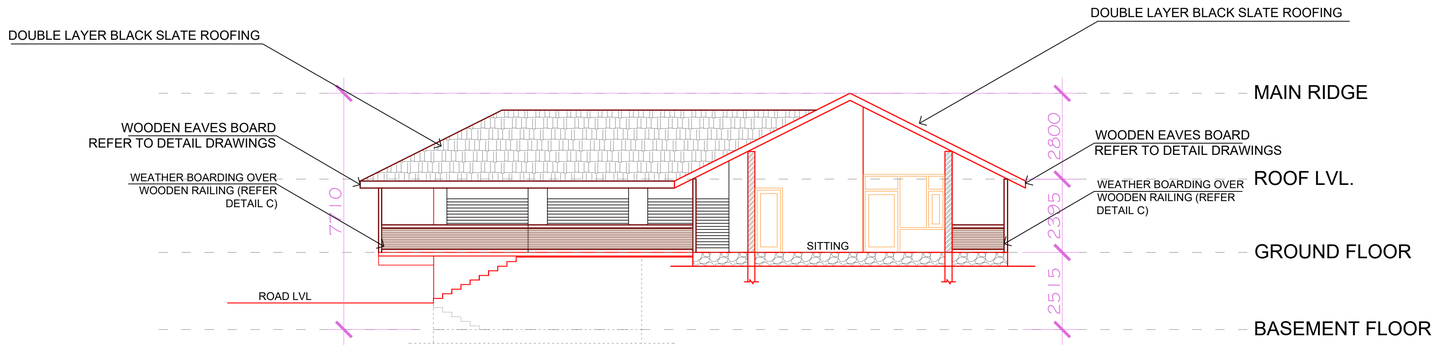

SECTION AT B-B

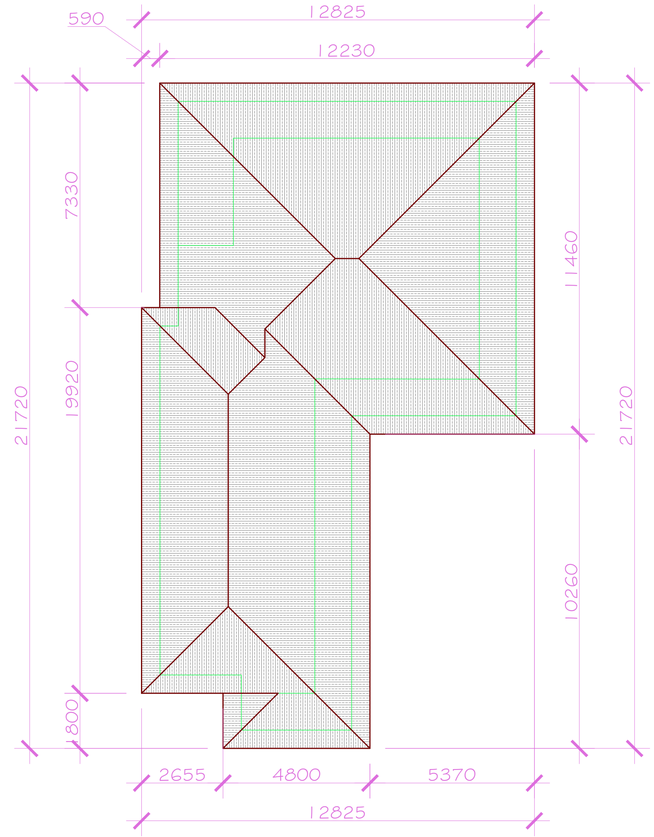

ROOF PLAN

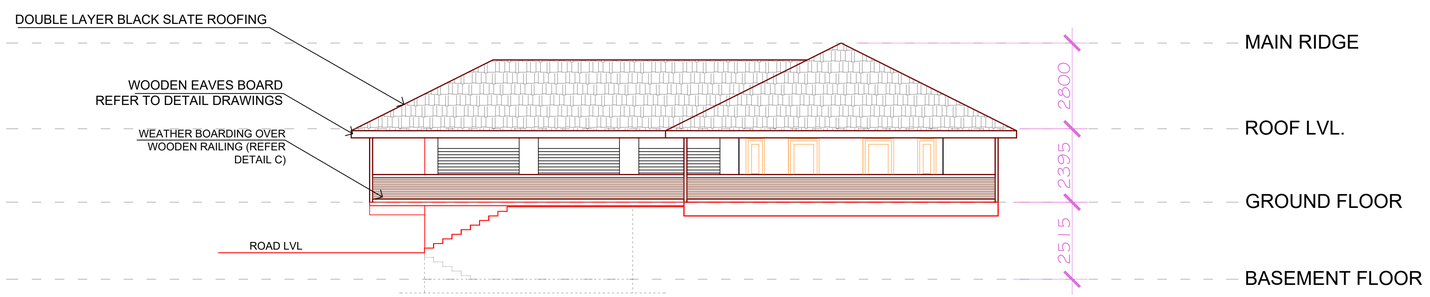

R.H.S ELEVATION

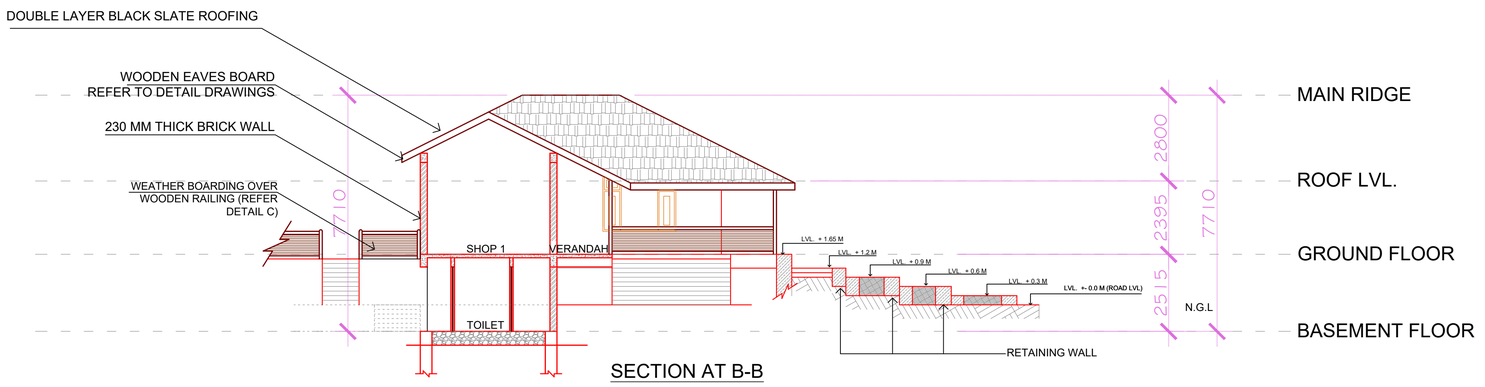

SECTION AT B-B

ORIENTATION	NOTE 1. ALL THE DIMENSIONS ARE IN MM. UNLESS SPECIFIED. 2. THIS DRAWING IS FOR TENDER PURPOSE ONLY. ACTUAL DRAWINGS WILL BE ISSUED DURING CONSTRUCTION AND MAY VARY AS PER SITE CONDITONS LIKE SPACE AVAILABILITY,TREES,ADJOINING BUILDING,SERVICE LAYOUT,ETC. 3. ANY DOUBT OR DESCRIPANCY IN THE DRAWING SHALL BE BROUGHT TO THE NOTICE OF THE ARCHITECT IN CHARGE BEFORE EXECUTING THE WORK. 4. THE DRAWING SHALL BE READ IN CONJECTION WITH RELEVANT STRUCTURAL DRAWINGS ALONG WITH RESPECTIVE DRAWINGS AND SPECIFICATIONS.	ARCHITECT (PMDSC) MR. DUNI CHAND DRAWN & DEALT BY MR. HIMANSHU	TEAM LEADER (PMDSC) MR.SUNIL KOUL PROJECT MANAGER (PIU) ER. RAKESH ARORA	CONSULTANT IPE GLOBAL IPE GLOBAL LTD. PROJECT MANAGEMENT CONSULTANT FOR I.D.I.P.T. FOR TOURISM, HIMACHAL PRADESH	ARCHITECT(PMU) AR. SAROJINI SHARMA TECHNICAL CONSULTANT	EXECUTIVE ENGINEER(PMU) ER. R.K. SHRIDHAR PROJECT DIRECTOR MR. MANOJ SHARMA	CLIENT IDIPT-HPTDB PROJECT IDIPT-HP (PROJECT1)	PACKAGE CREATION OF TOURIST CULTURAL CENTRE AT JANJHELI, DISTT. MANDI, (H.P.). PACKAGE NO. 15/2	DRAWING TITLE ELEVATIONS, SECTIONS,BASEMENT FLOOR PLAN & ROOF PLAN	DRAWING NO. HP/CULTURAL CENTRE - JANJHELI /FOOD COURT/02 DATE :- 13/04/2018 SCALE:- 1:75

FOOD COURT

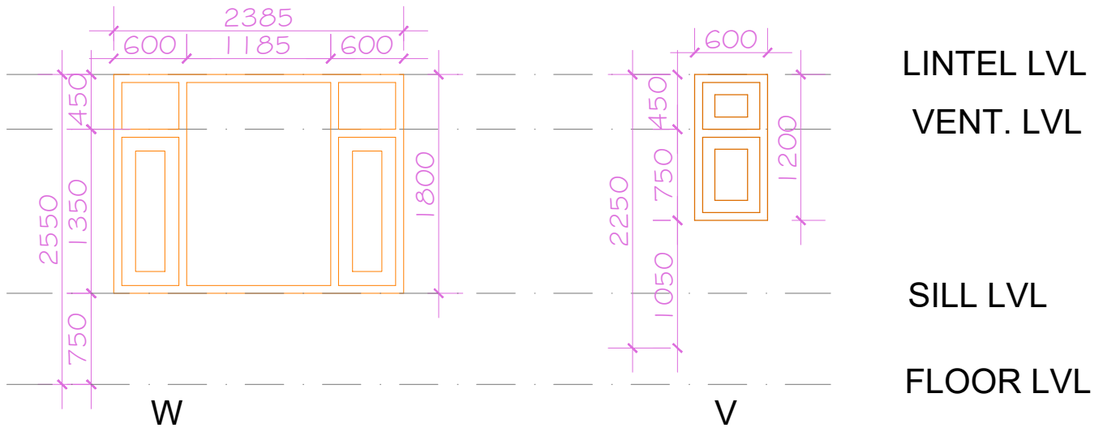

W

BASEMENT FLOOR- 0 NO.
GROUND FLOOR - 1 NO.

V

BASEMENT FLOOR- 2 NO.
GROUND FLOOR - 0 NO.

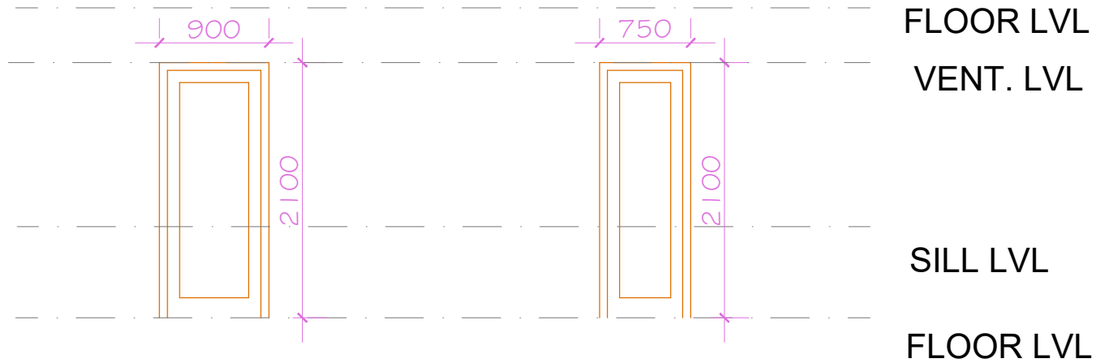

D1

BASEMENT FLOOR- 2 NO.
GROUND FLOOR - 2 NO.

D2

BASEMENT FLOOR- 4 NO.
GROUND FLOOR - 0 NO.

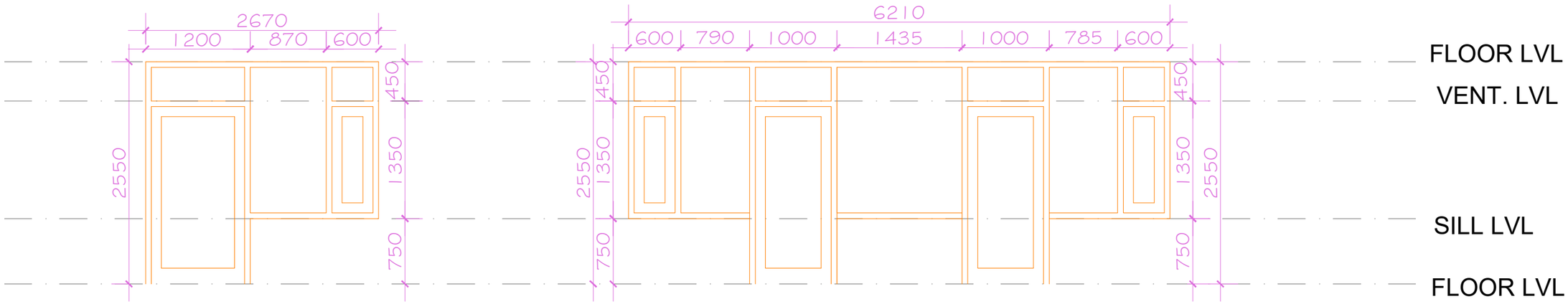

DW

BASEMENT FLOOR- 0 NO.
GROUND FLOOR - 1 NO.

DW1

BASEMENT FLOOR- 0 NO.
GROUND FLOOR - 1 NO.

ORIENTATION	NOTE 1. ALL THE DIMENSIONS ARE IN MM. UNLESS SPECIFIED. 2. THIS DRAWING IS FOR TENDER PURPOSE ONLY. ACTUAL DRAWINGS WILL BE ISSUED DURING CONSTRUCTION AND MAY VARY AS PER SITE CONDITONS LIKE SPACE AVAILABILITY,TREES,ADJOINING BUILDING,SERVICE LAYOUT,ETC. 3. ANY DOUBT OR DESCRIPANCY IN THE DRAWING SHALL BE BROUGHT TO THE NOTICE OF THE ARCHITECT IN CHARGE BEFORE EXECUTING THE WORK. 4. THE DRAWING SHALL BE READ IN CONJECTION WITH RELEVANT STRUCTURAL DRAWINGS ALONG WITH RESPECTIVE DRAWINGS AND SPECIFICATIONS.	ARCHITECT (PMDSC) MR. DUNI CHAND DRAWN & DEALT BY MR. HIMANSHU	TEAM LEADER (PMDSC) MR.SUNIL KOUL PROJECT MANAGER (PIU) ER. RAKESH ARORA	CONSULTANT IPE GLOBAL IPE GLOBAL LTD. PROJECT MANAGEMENT CONSULTANT FOR I.D.I.P.T. FOR TOURISM, HIMACHAL PRADESH	ARCHITECT(PMU) AR. SAROJINI SHARMA TECHNICAL CONSULTANT	EXECUTIVE ENGINEER(PMU) ER. R.K. SHRIDHAR PROJECT DIRECTOR MR. MANOJ SHARMA	CLIENT IDIPT-HPTDB PROJECT IDIPT-HP (PROJECT1)	PACKAGE CREATION OF TOURIST CULTURAL CENTRE AT JANJHELI, DISTT. MANDI, (H.P.). PACKAGE NO. 15/2	DRAWING TITLE FOOD COURT - DOOR AND WINDOW DETAILS	DRAWING NO. HP/CULTURAL CENTRE - JANJHELI /FOOR COURT/DWS/01 DATE :- 13/04/2018 SCALE:- 1:XXX

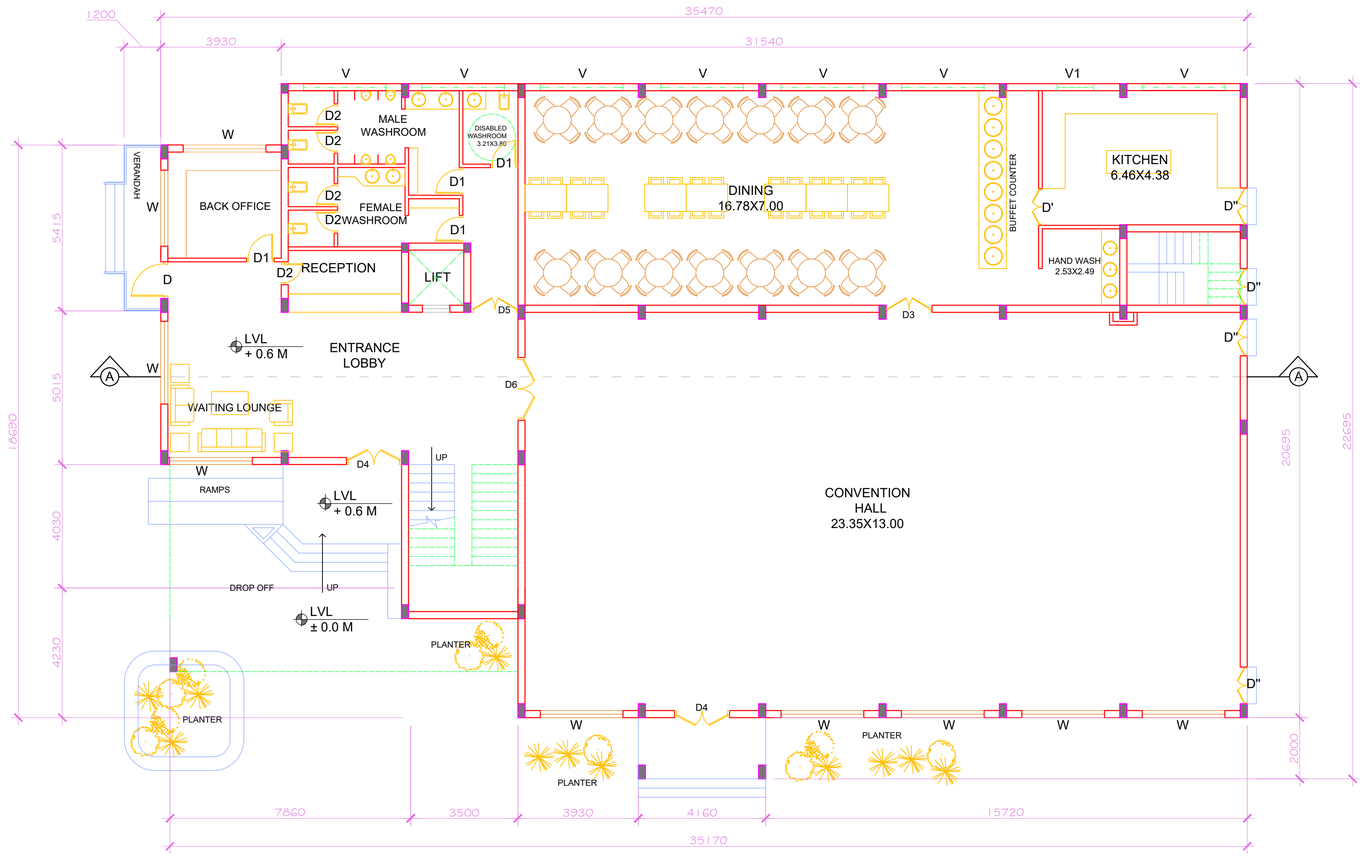

GROUND FLOOR PLAN

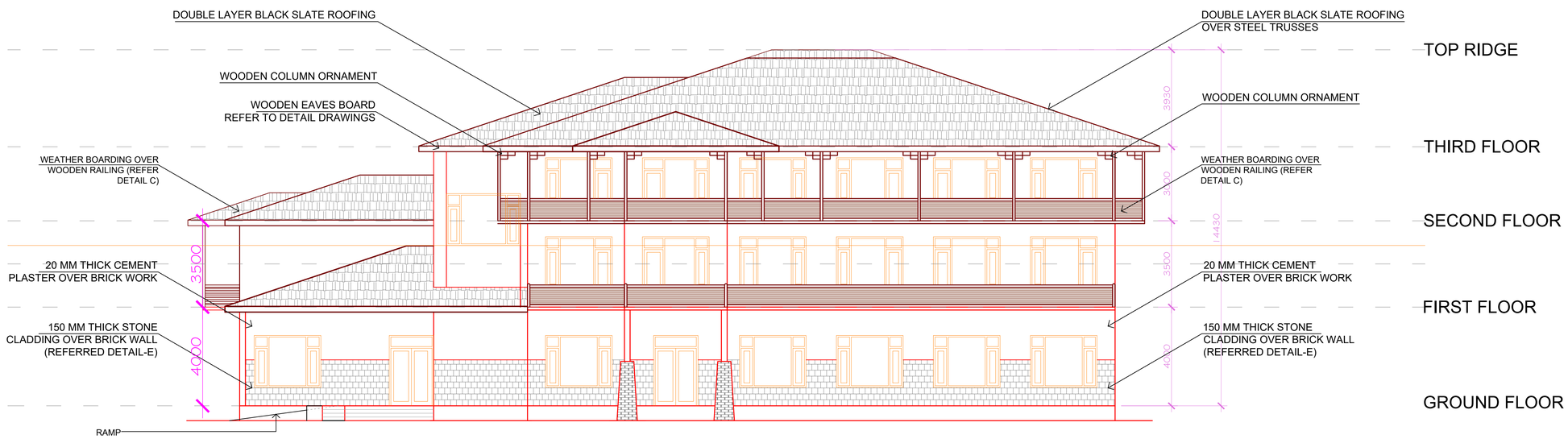

FRONT ELEVATION

ORIENTATION	**NOTE** 1. ALL THE DIMENSIONS ARE IN MM. UNLESS SPECIFIED. 2. THIS DRAWING IS FOR TENDER PURPOSE ONLY. ACTUAL DRAWINGS WILL BE ISSUED DURING CONSTRUCTION AND MAY VARY AS PER SITE CONDITONS LIKE SPACE AVAILABILITY,TREES,ADJOINING BUILDING,SERVICE LAYOUT,ETC. 3. ANY DOUBT OR DESCRIPANCY IN THE DRAWING SHALL BE BROUGHT TO THE NOTICE OF THE ARCHITECT IN CHARGE BEFORE EXECUTING THE WORK. 4. THE DRAWING SHALL BE READ IN CONJECTION WITH RELEVANT STRUCTURAL DRAWINGS ALONG WITH RESPECTIVE DRAWINGS AND SPECIFICATIONS.	**ARCHITECT (PMDSC)** MR. DUNI CHAND **DRAWN & DEALT BY** MR. HIMANSHU	**TEAM LEADER (PMDSC)** MR.SUNIL KOUL **PROJECT MANAGER (PIU)** ER. RAKESH ARORA	**CONSULTANT** IPE GLOBAL **IPE GLOBAL LTD.** PROJECT MANAGEMENT CONSULTANT FOR I.D.J.P.T. FOR TOURISM, HIMACHAL PRADESH	**ARCHITECT(PMU)** AR. SAROJINI SHARMA **TECHNICAL CONSULTANT**	**EXECUTIVE ENGINEER(PMU)** ER. R.K. SHRIDHAR **PROJECT DIRECTOR** MR. MANOJ SHARMA	**CLIENT** IDIPT-HPTDB **PROJECT** IDIPT-HP (PROJECT1)	**PACKAGE** CREATION OF TOURIST CULTURAL CENTRE AT JANJHELI, DISTT. MANDI, (H.P.). PACKAGE NO. 15/2	**DRAWING TITLE** FRONT ELEVATION & GROUND FLOOR PLAN	**DRAWING NO.** HP/CULTURAL CENTRE - JANJHELI /CONVENTION/01 **DATE :-** 13/04/2018 **SCALE:- 1:75**

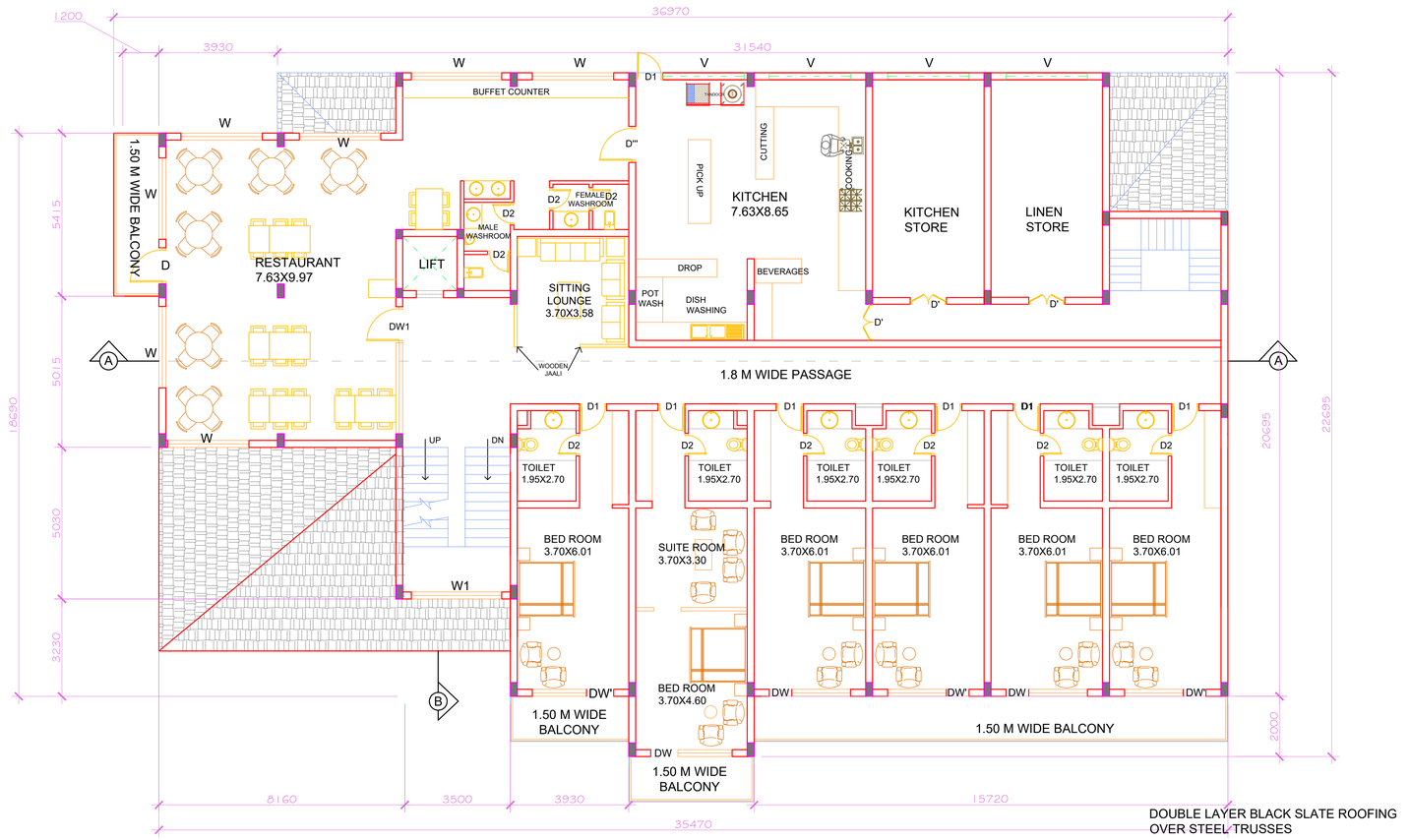

DOUBLE LAYER BLACK SLATE ROOFING
OVER STEEL TRUSSES

FIRST FLOOR PLAN

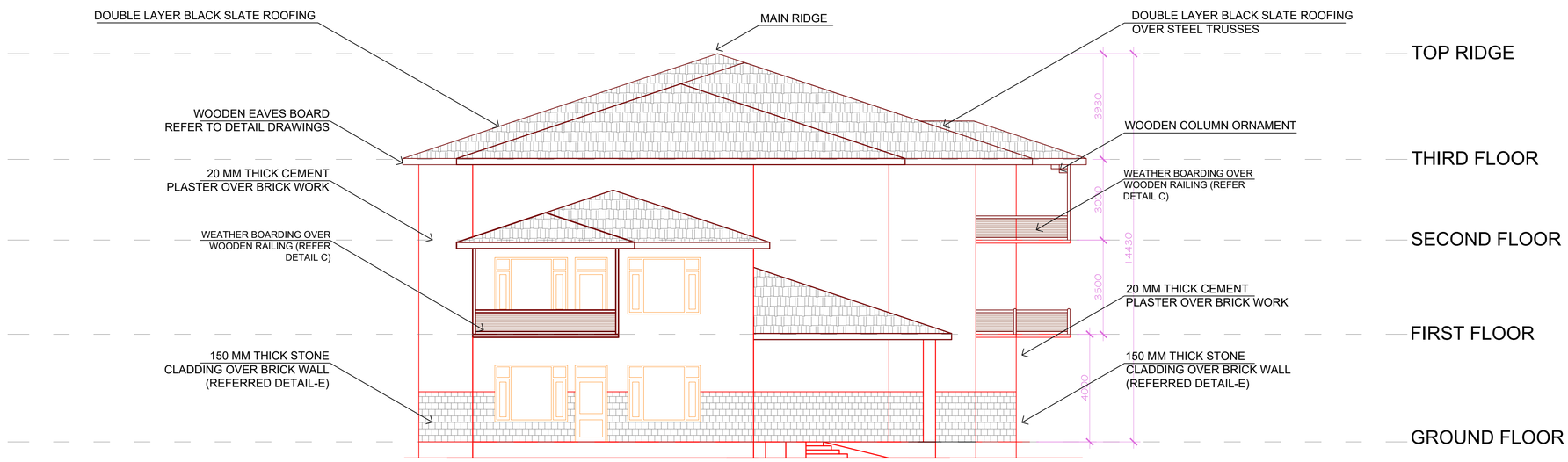

L.H.S ELEVATION

ORIENTATION	NOTE 1. ALL THE DIMENSIONS ARE IN MM. UNLESS SPECIFIED. 2. THIS DRAWING IS FOR TENDER PURPOSE ONLY. ACTUAL DRAWINGS WILL BE ISSUED DURING CONSTRUCTION AND MAY VARY AS PER SITE CONDITONS LIKE SPACE AVAILABILITY,TREES,ADJOINING BUILDING,SERVICE LAYOUT,ETC. 3. ANY DOUBT OR DESCRIPANCY IN THE DRAWING SHALL BE BROUGHT TO THE NOTICE OF THE ARCHITECT IN CHARGE BEFORE EXECUTING THE WORK. 4. THE DRAWING SHALL BE READ IN CONJECTION WITH RELEVANT STRUCTURAL DRAWINGS ALONG WITH RESPECTIVE DRAWINGS AND SPECIFICATIONS.	ARCHITECT (PMDSC) MR. DUNI CHAND DRAWN & DEALT BY MR. HIMANSHU	TEAM LEADER (PMDSC) MR.SUNIL KOUL PROJECT MANAGER (PIU) ER. RAKESH ARORA	CONSULTANT IPE GLOBAL IPE GLOBAL LTD. PROJECT MANAGEMENT CONSULTANT FOR I.D.J.P.T. FOR TOURISM, HIMACHAL PRADESH	ARCHITECT(PMU) AR. SAROJINI SHARMA TECHNICAL CONSULTANT	EXECUTIVE ENGINEER(PMU) ER. R.K. SHRIDHAR PROJECT DIRECTOR MR. MANOJ SHARMA	CLIENT IDIPT-HPTDB PROJECT IDIPT-HP (PROJECT1)	PACKAGE CREATION OF TOURIST CULTURAL CENTRE AT JANJHELI, DISTT. MANDI, (H.P.). PACKAGE NO. 15/2	DRAWING TITLE FIRST FLOOR PLAN & L.H.S ELEVATION	DRAWING NO. HP/CULTURAL CENTRE - JANJHELI /CONVENTION/02 DATE :- 13/04/2018 SCALE:- 1:75

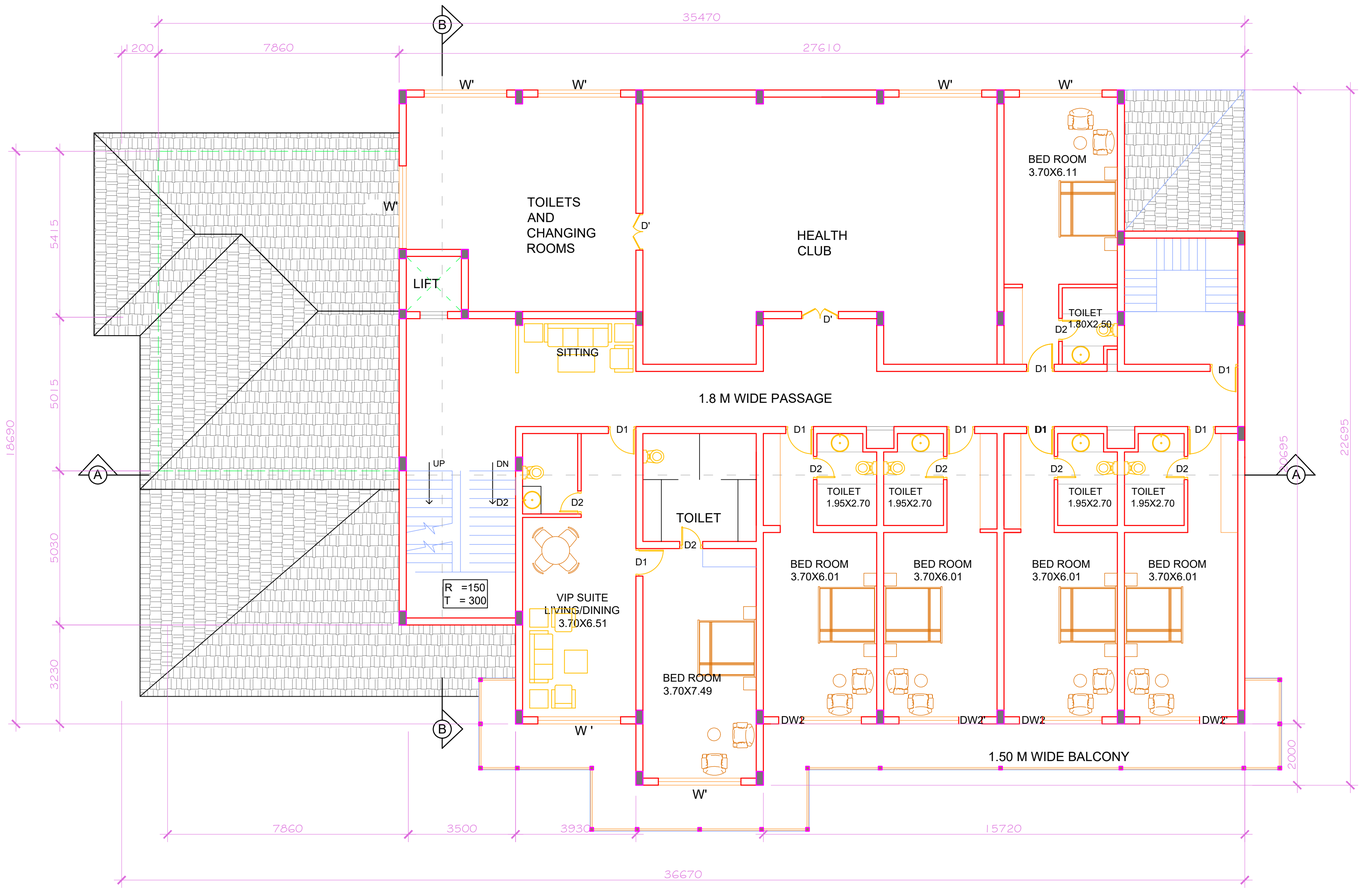

SECOND FLOOR PLAN

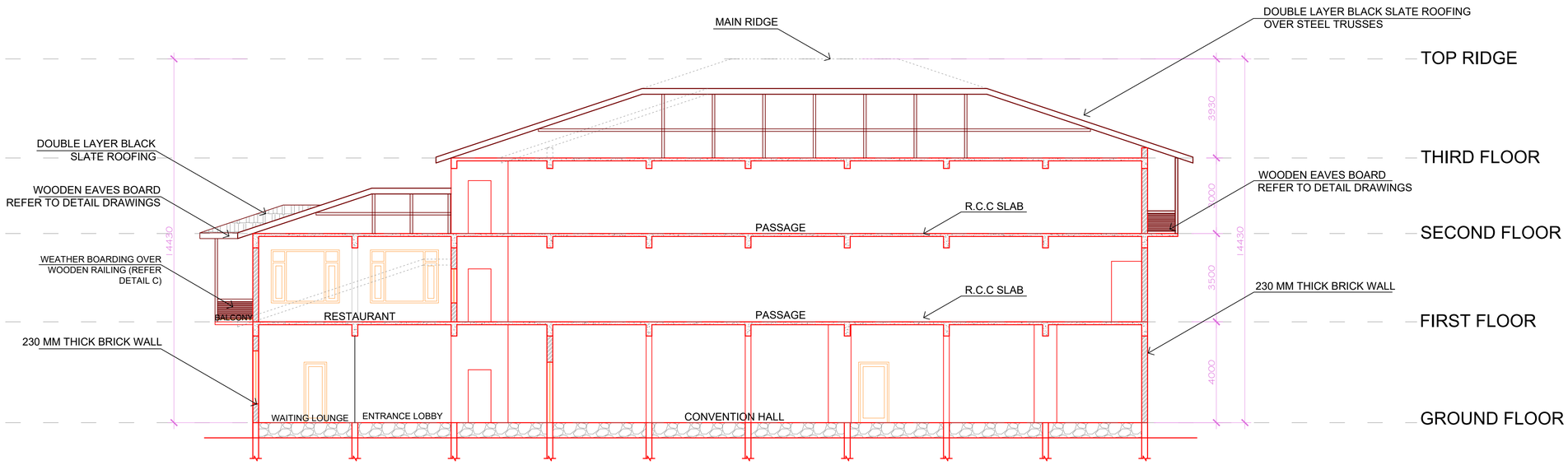

SECTION AT A-A

ORIENTATION	NOTE 1. ALL THE DIMENSIONS ARE IN MM, UNLESS SPECIFIED. 2. THIS DRAWING IS FOR TENDER PURPOSE ONLY. ACTUAL DRAWINGS WILL BE ISSUED DURING CONSTRUCTION AND MAY VARY AS PER SITE CONDITONS LIKE SPACE AVAILABILITY, TREES, ADJOINING BUILDING, SERVICE LAYOUT, ETC. 3. ANY DOUBT OR DESCRIPANCY IN THE DRAWING SHALL BE BROUGHT TO THE NOTICE OF THE ARCHITECT IN CHARGE BEFORE EXECUTING THE WORK. 4. THE DRAWING SHALL BE READ IN CONJECTION WITH RELEVANT STRUCTURAL DRAWINGS ALONG WITH RESPECTIVE DRAWINGS AND SPECIFICATIONS.	ARCHITECT (PMDSC) MR. DUNI CHAND DRAWN & DEALT BY MR. HIMANSHU	TEAM LEADER (PMDSC) MR.SUNIL KOUL PROJECT MANAGER (PIU) ER. RAKESH ARORA	CONSULTANT IPE GLOBAL IPE GLOBAL LTD. PROJECT MANAGEMENT CONSULTANT FOR I.D.I.P.T. FOR TOURISM, HIMACHAL PRADESH	ARCHITECT(PMU) AR. SAROJINI SHARMA TECHNICAL CONSULTANT	EXECUTIVE ENGINEER(PMU) ER. R.K. SHRIDHAR PROJECT DIRECTOR MR. MANOJ SHARMA	CLIENT IDIPT-HPTDB PROJECT IDIPT-HP (PROJECT1)	PACKAGE CREATION OF TOURIST CULTURAL CENTRE AT JANJHELI, DISTT. MANDI, (H.P.). PACKAGE NO. 15/2	DRAWING TITLE SECOND FLOOR PLAN & SECTION AT A-A	DRAWING NO. HP/CULTURAL CENTRE - JANJHELI /CONVENTION/03 DATE :- 13/04/2018 SCALE:- 1:75

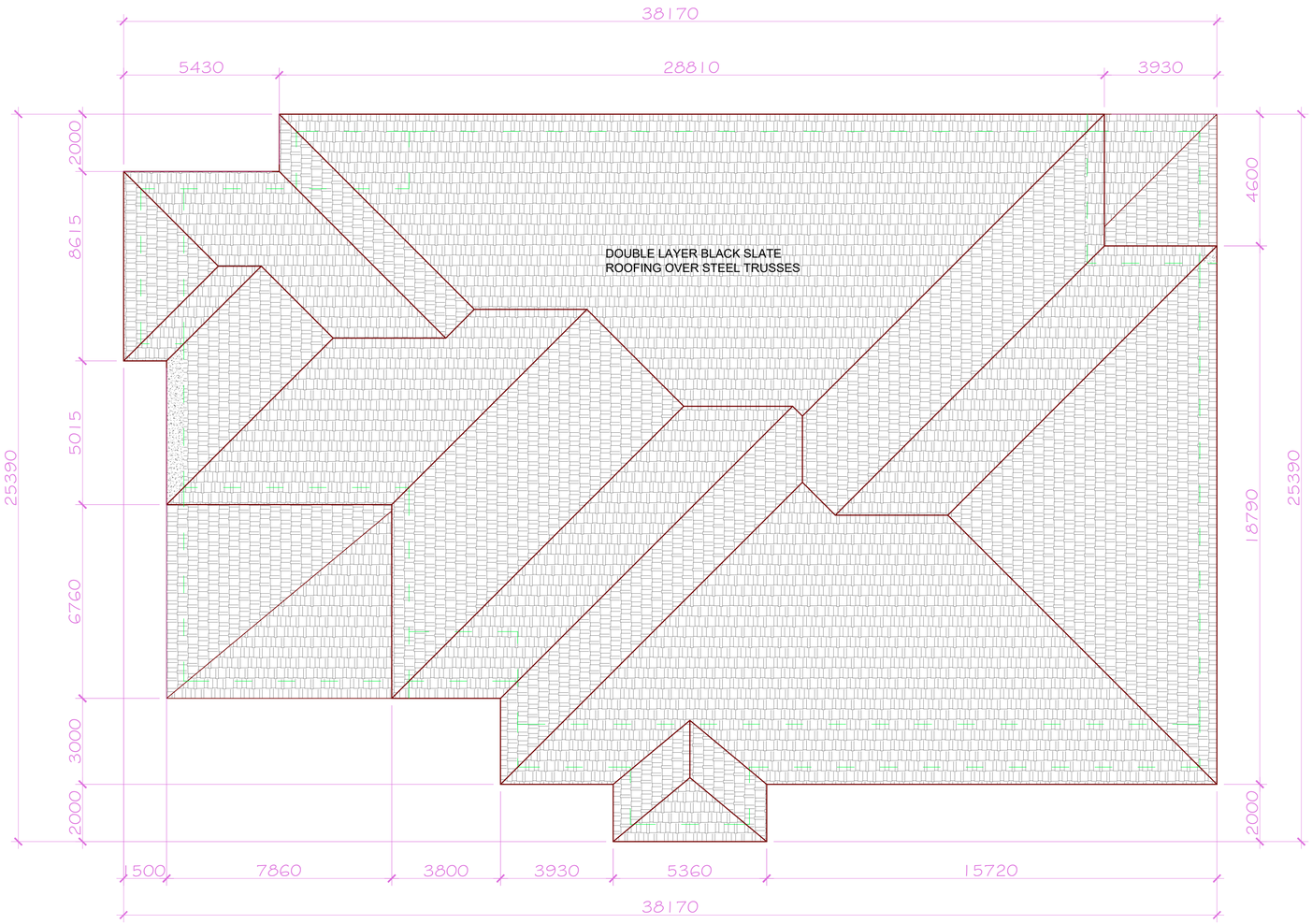

ROOF PLAN

ORIENTATION	**NOTE** 1. ALL THE DIMENSIONS ARE IN MM. UNLESS SPECIFIED. 2. THIS DRAWING IS FOR TENDER PURPOSE ONLY. ACTUAL DRAWINGS WILL BE ISSUED DURING CONSTRUCTION AND MAY VARY AS PER SITE CONDITONS LIKE SPACE AVAILABILITY,TREES,ADJOINING BUILDING,SERVICE LAYOUT,ETC. 3. ANY DOUBT OR DESCRIPANCY IN THE DRAWING SHALL BE BROUGHT TO THE NOTICE OF THE ARCHITECT IN CHARGE BEFORE EXECUTING THE WORK. 4. THE DRAWING SHALL BE READ IN CONJECTION WITH RELEVANT STRUCTURAL DRAWINGS ALONG WITH RESPECTIVE DRAWINGS AND SPECIFICATIONS.	**ARCHITECT (PMDSC)** MR. DUNI CHAND **DRAWN & DEALT BY** MR. HIMANSHU	**TEAM LEADER (PMDSC)** MR.SUNIL KOUL **PROJECT MANAGER (PIU)** ER. RAKESH ARORA	**CONSULTANT** IPE GLOBAL Expanding Horizons, Enriching Lives. **IPE GLOBAL LTD.** PROJECT MANAGEMENT CONSULTANT FOR I.D.I.P.T. FOR TOURISM, HIMACHAL PRADESH	**ARCHITECT(PMU)** AR. SAROJINI SHARMA **TECHNICAL CONSULTANT**	**EXECUTIVE ENGINEER(PMU)** ER. R.K. SHRIDHAR **PROJECT DIRECTOR** MR. MANOJ SHARMA	**CLIENT** IDIPT-HPTDB **PROJECT** IDIPT-HP (PROJECT1)	**PACKAGE** CREATION OF TOURIST CULTURAL CENTRE AT JANJHELI, DISTT. MANDI, (H.P.). PACKAGE NO. 15/2	**DRAWING TITLE** ROOF PLAN	**DRAWING NO.** HP/CULTURAL CENTRE - JANJHELI /CONVENTION/04 **DATE :-** 13/04/2018 **SCALE:-** 1:75

CONVENTION HALL

GROUND & FIRST FLOOR

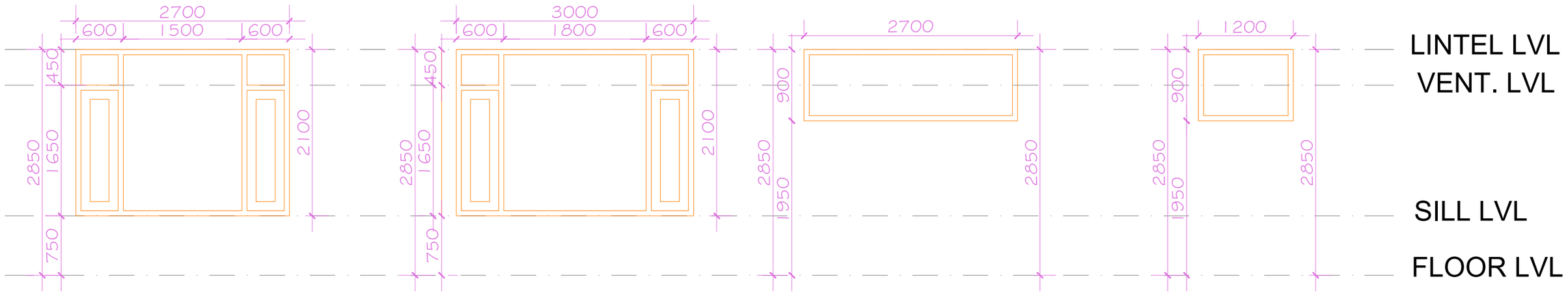

W
GROUND FLOOR - 9 NO.
FIRST FLOOR - 7 NO.

W1
GROUND FLOOR - 0 NO.
FIRST FLOOR - 1 NO.

V
GROUND FLOOR - 7 NO.
FIRST FLOOR - 4 NO.

V1
GROUND FLOOR - 1 NO.
FIRST FLOOR - 0 NO.

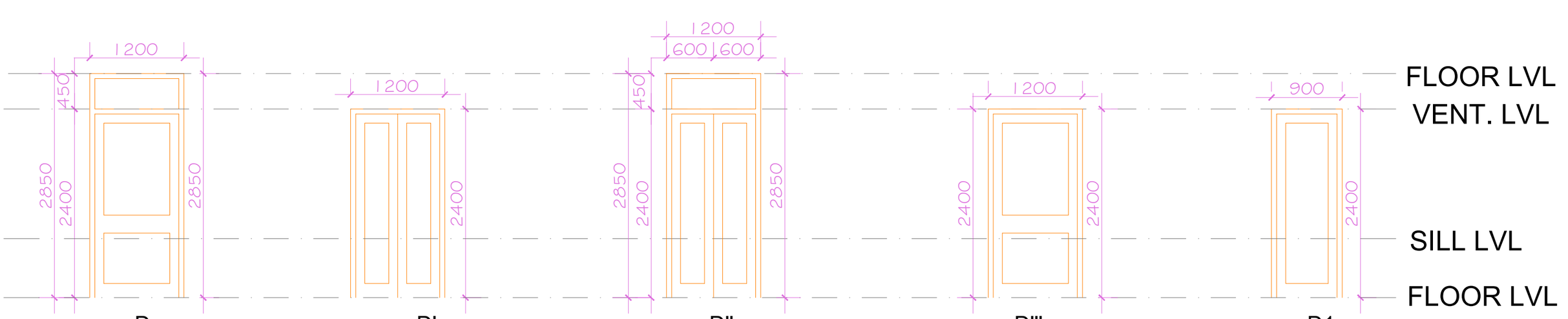

D
GROUND FLOOR - 1 NO.
FIRST FLOOR - 1 NO.

D'
GROUND FLOOR - 1 NO.
FIRST FLOOR - 3 NO.

D"
GROUND FLOOR - 4 NO.
FIRST FLOOR - 0 NO.

D'''
GROUND FLOOR - 0 NO.
FIRST FLOOR - 1 NO.

D1
GROUND FLOOR - 4 NO.
FIRST FLOOR - 7 NO.

ORIENTATION	NOTE 1. ALL THE DIMENSIONS ARE IN MM. UNLESS SPECIFIED. 2. THIS DRAWING IS FOR TENDER PURPOSE ONLY. ACTUAL DRAWINGS WILL BE ISSUED DURING CONSTRUCTION AND MAY VARY AS PER SITE CONDITONS LIKE SPACE AVAILABILITY,TREES,ADJOINING BUILDING,SERVICE LAYOUT,ETC. 3. ANY DOUBT OR DESCRIPANCY IN THE DRAWING SHALL BE BROUGHT TO THE NOTICE OF THE ARCHITECT IN CHARGE BEFORE EXECUTING THE WORK. 4. THE DRAWING SHALL BE READ IN CONJECTION WITH RELEVANT STRUCTURAL DRAWINGS ALONG WITH RESPECTIVE DRAWINGS AND SPECIFICATIONS.	ARCHITECT (PMDSC) MR. DUNI CHAND DRAWN & DEALT BY MR. HIMANSHU	TEAM LEADER (PMDSC) MR.SUNIL KOUL PROJECT MANAGER (PIU) ER. RAKESH ARORA	CONSULTANT IPE GLOBAL IPE GLOBAL LTD. PROJECT MANAGEMENT CONSULTANT FOR I.D.,I.P.T. FOR TOURISM, HIMACHAL PRADESH	ARCHITECT(PMU) AR. SAROJINI SHARMA TECHNICAL CONSULTANT	EXECUTIVE ENGINEER(PMU) ER. R.K. SHRIDHAR PROJECT DIRECTOR MR. MANOJ SHARMA	CLIENT IDIPT-HPTDB PROJECT IDIPT-HP (PROJECT1)	PACKAGE CREATION OF TOURIST CULTURAL CENTRE AT JANJHELI, DISTT. MANDI, (H.P.). PACKAGE NO. 15/2	DRAWING TITLE CONVENTION BLOCK - DOOR AND WINDOW DETAILS - 1	DRAWING NO. HP/CULTURAL CENTRE - JANJHELI /CONVENTION/DWS/01 DATE :- 13/04/2018 SCALE:- 1:XXX

CONVENTION HALL

GROUND & FIRST FLOOR

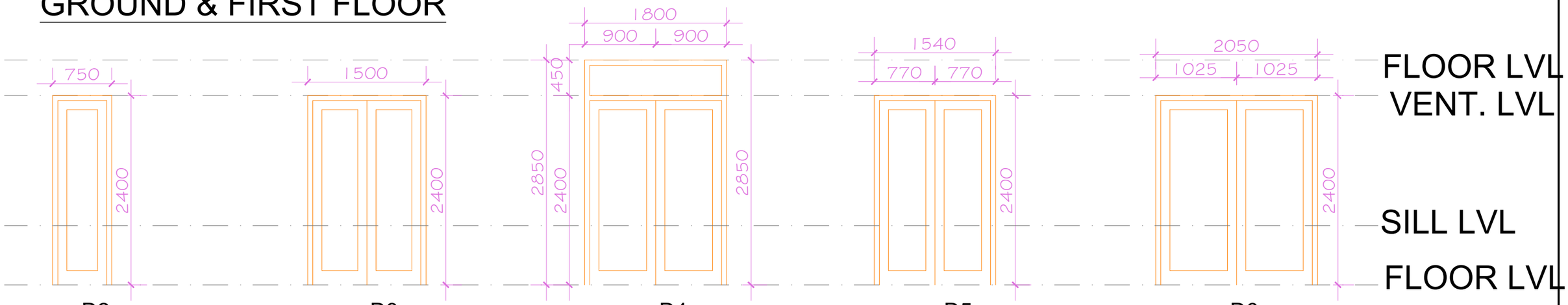

D2
GROUND FLOOR - 5 NO.
FIRST FLOOR - 10 NO.

D3
GROUND FLOOR - 1 NO.
FIRST FLOOR - 0 NO.

D4
GROUND FLOOR - 2 NO.
FIRST FLOOR - 0 NO.

D5
GROUND FLOOR - 1 NO.
FIRST FLOOR - 0 NO.

D6
GROUND FLOOR - 1 NO.
FIRST FLOOR - 0 NO.

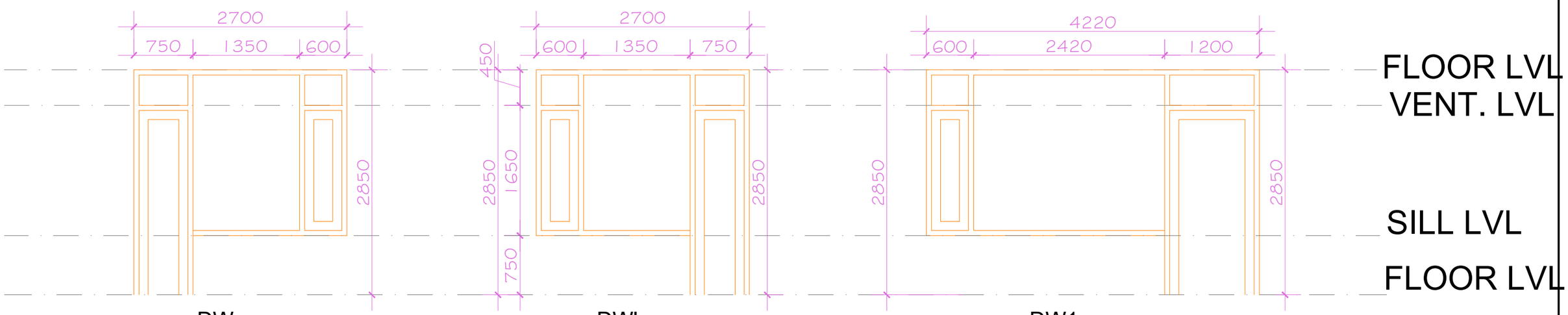

DW
GROUND FLOOR - 0 NO.
FIRST FLOOR - 3 NO.

DW'
GROUND FLOOR - 0 NO.
FIRST FLOOR - 3 NO.

DW1
GROUND FLOOR - 0 NO.
FIRST FLOOR - 1 NO.

ORIENTATION	NOTE 1. ALL THE DIMENSIONS ARE IN MM. UNLESS SPECIFIED. 2. THIS DRAWING IS FOR TENDER PURPOSE ONLY. ACTUAL DRAWINGS WILL BE ISSUED DURING CONSTRUCTION AND MAY VARY AS PER SITE CONDITONS LIKE SPACE AVAILABILITY,TREES,ADJOINING BUILDING,SERVICE LAYOUT,ETC. 3. ANY DOUBT OR DESCRIPANCY IN THE DRAWING SHALL BE BROUGHT TO THE NOTICE OF THE ARCHITECT IN CHARGE BEFORE EXECUTING THE WORK. 4. THE DRAWING SHALL BE READ IN CONJECTION WITH RELEVANT STRUCTURAL DRAWINGS ALONG WITH RESPECTIVE DRAWINGS AND SPECIFICATIONS.	ARCHITECT (PMDSC) MR. DUNI CHAND DRAWN & DEALT BY MR. HIMANSHU	TEAM LEADER (PMDSC) MR.SUNIL KOUL PROJECT MANAGER (PIU) ER. RAKESH ARORA	CONSULTANT IPE GLOBAL IPE GLOBAL LTD. PROJECT MANAGEMENT CONSULTANT FOR I.D.I.P.T. FOR TOURISM, HIMACHAL PRADESH	ARCHITECT(PMU) AR. SAROJINI SHARMA TECHNICAL CONSULTANT	EXECUTIVE ENGINEER(PMU) ER. R.K. SHRIDHAR PROJECT DIRECTOR MR. MANOJ SHARMA	CLIENT IDIPT-HPTDB PROJECT IDIPT-HP (PROJECT1)	PACKAGE CREATION OF TOURIST CULTURAL CENTRE AT JANJHELI, DISTT. MANDI, (H.P.). PACKAGE NO. 15/2	DRAWING TITLE CONVENTION BLOCK - DOOR AND WINDOW DETAILS - 2	DRAWING NO. HP/CULTURAL CENTRE - JANJHELI /CONVENTION/DWS/02 DATE :- 13/04/2018 SCALE:- 1:XXX

CONVENTION HALL

SECOND FLOOR

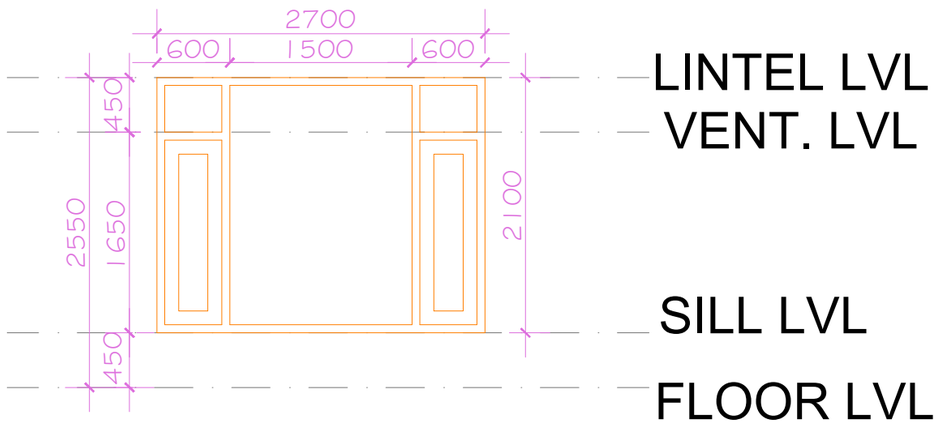

W'
SECOND FLOOR - 7 NO.

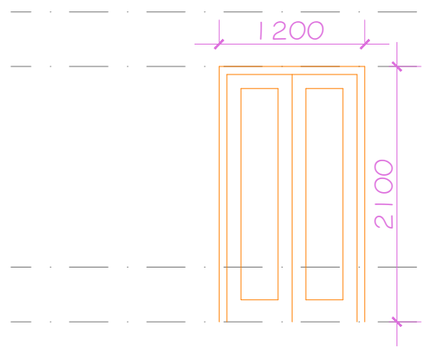

D'
SECOND FLOOR - 2 NO.

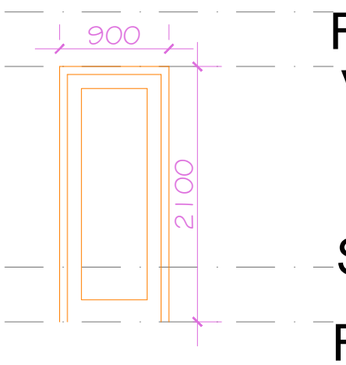

D1
SECOND FLOOR - 8 NO.

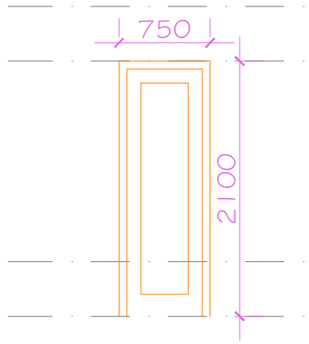

D2
SECOND FLOOR - 7 NO.

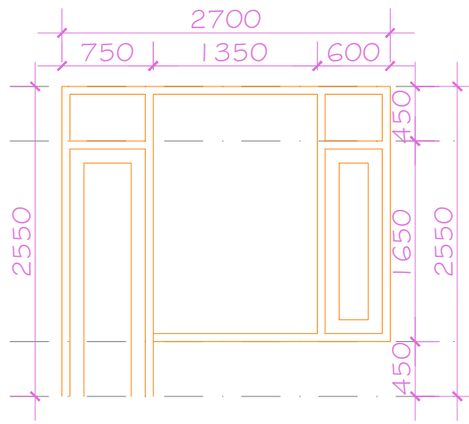

DW2
SECOND FLOOR - 2 NO.

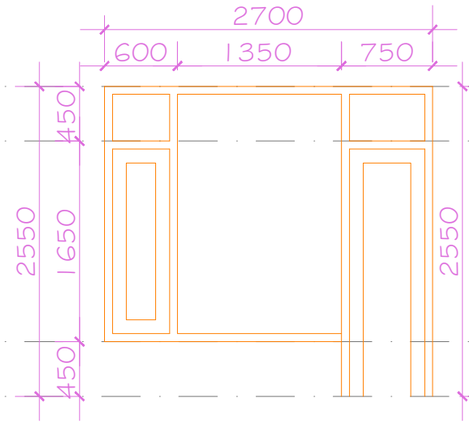

DW2'
SECOND FLOOR - 2 NO.

ORIENTATION	NOTE	ARCHITECT (PMDSC)	TEAM LEADER (PMDSC)	CONSULTANT	ARCHITECT(PMU)	EXECUTIVE ENGINEER(PMU)	CLIENT	PACKAGE	DRAWING TITLE	DRAWING NO.
	1. ALL THE DIMENSIONS ARE IN MM. UNLESS SPECIFIED. 2. THIS DRAWING IS FOR TENDER PURPOSE ONLY. ACTUAL DRAWINGS WILL BE ISSUED DURING CONSTRUCTION AND MAY VARY AS PER SITE CONDITONS LIKE SPACE AVAILABILITY,TREES,ADJOINING BUILDING,SERVICE LAYOUT,ETC. 3. ANY DOUBT OR DESCRIPANCY IN THE DRAWING SHALL BE BROUGHT TO THE NOTICE OF THE ARCHITECT IN CHARGE BEFORE EXECUTING THE WORK. 4. THE DRAWING SHALL BE READ IN CONJECTION WITH RELEVANT STRUCTURAL DRAWINGS ALONG WITH RESPECTIVE DRAWINGS AND SPECIFICATIONS.	MR. DUNI CHAND	MR.SUNIL KOUL	IPE GLOBAL IPE GLOBAL LTD. PROJECT MANAGEMENT CONSULTANT FOR I.D.I.P.T. FOR TOURISM, HIMACHAL PRADESH	AR. SAROJINI SHARMA	ER. R.K. SHRIDHAR	IDIPT-HPTDB	CREATION OF TOURIST CULTURAL CENTRE AT JANJHELI, DISTT. MANDI, (H.P.). PACKAGE NO. 15/2	CONVENTION BLOCK - DOOR AND WINDOW DETAILS - 3	HP/CULTURAL CENTRE - JANJHELI /CONVENTION/DWS/03
		DRAWN & DEALT BY MR. HIMANSHU	PROJECT MANAGER (PIU) ER. RAKESH ARORA		TECHNICAL CONSULTANT	PROJECT DIRECTOR MR. MANOJ SHARMA	PROJECT IDIPT-HP (PROJECT1)			DATE :- 13/04/2018 SCALE:- 1:XXX

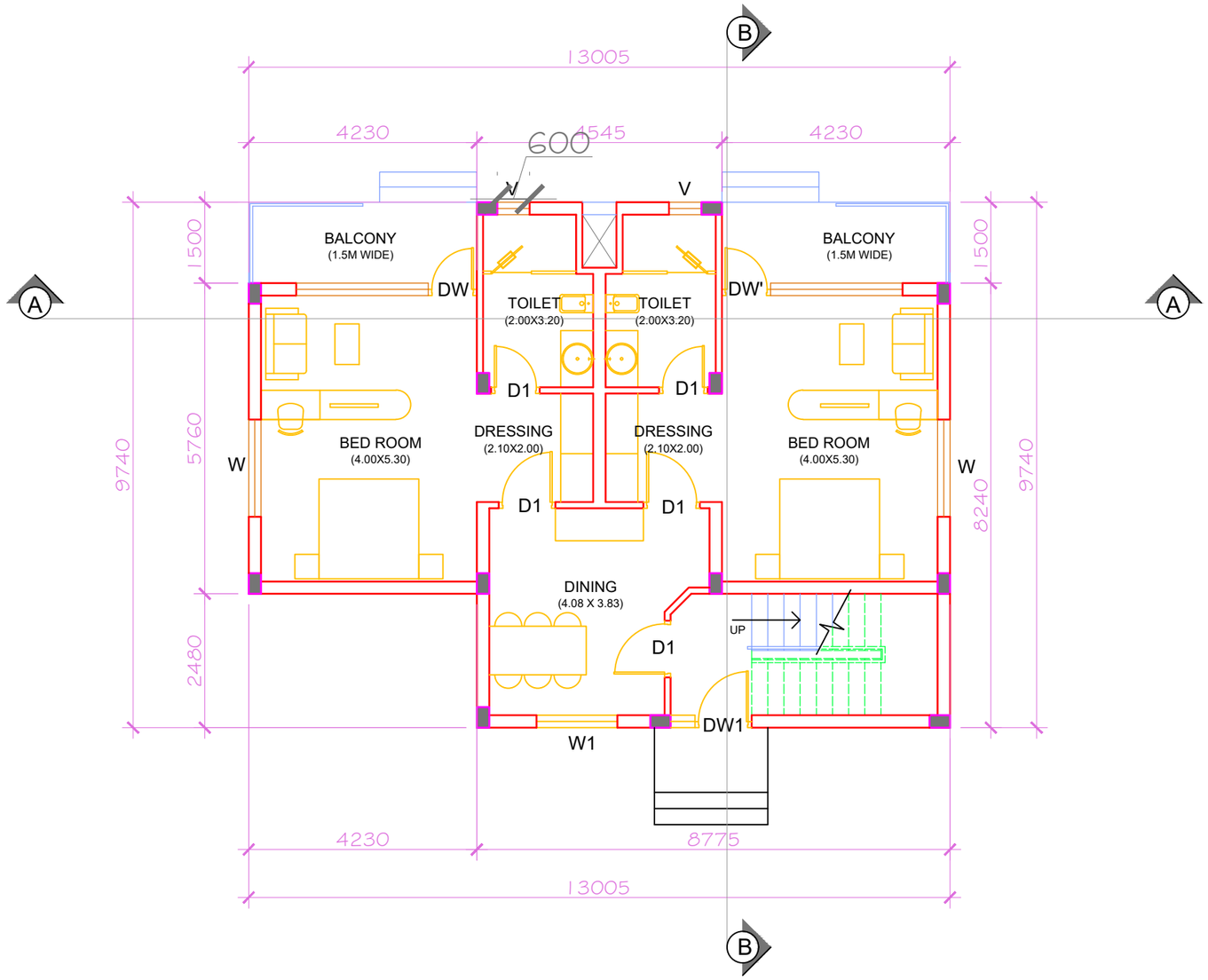

GROUND FLOOR PLAN

ORIENTATION	NOTE 1. ALL THE DIMENSIONS ARE IN MM, UNLESS SPECIFIED. 2. THIS DRAWING IS FOR TENDER PURPOSE ONLY. ACTUAL DRAWINGS WILL BE ISSUED DURING CONSTRUCTION AND MAY VARY AS PER SITE CONDITIONS LIKE SPACE AVAILABILITY,TREES,ADJOINING BUILDING,SERVICE LAYOUT,ETC. 3. ANY DOUBT OR DESCRIPANCY IN THE DRAWING SHALL BE BROUGHT TO THE NOTICE OF THE ARCHITECT IN CHARGE BEFORE EXECUTING THE WORK. 4. THE DRAWING SHALL BE READ IN CONJECTION WITH RELEVANT STRUCTURAL DRAWINGS ALONG WITH RESPECTIVE DRAWINGS AND SPECIFICATIONS.	ARCHITECT (PMDSC) MR. DUNI CHAND DRAWN & DEALT BY MR. HIMANSHU	TEAM LEADER (PMDSC) MR.SUNIL KOUL PROJECT MANAGER (PIU) ER. RAKESH ARORA	CONSULTANT IPE GLOBAL IPE GLOBAL LTD. PROJECT MANAGEMENT CONSULTANT FOR I.D.I.P.T. FOR TOURISM, HIMACHAL PRADESH	ARCHITECT(PMU) AR. SAROJINI SHARMA TECHNICAL CONSULTANT	EXECUTIVE ENGINEER(PMU) ER. R.K. SHRIDHAR PROJECT DIRECTOR MR. MANOJ SHARMA	CLIENT IDIPT-HPTDB PROJECT IDIPT-HP (PROJECT1)	PACKAGE CREATION OF TOURIST CULTURAL CENTRE AT JANJHELI, DISTT. MANDI, (H.P.). PACKAGE NO. 15/2	DRAWING TITLE CONSTRUCTION DRAWING GROUND FLOOR PLAN	DRAWING NO. HP/CULTURAL CENTRE - JANJHELI /COTTAGE/PLAN/01 DATE :- 13/04/2018 SCALE:- 1:75

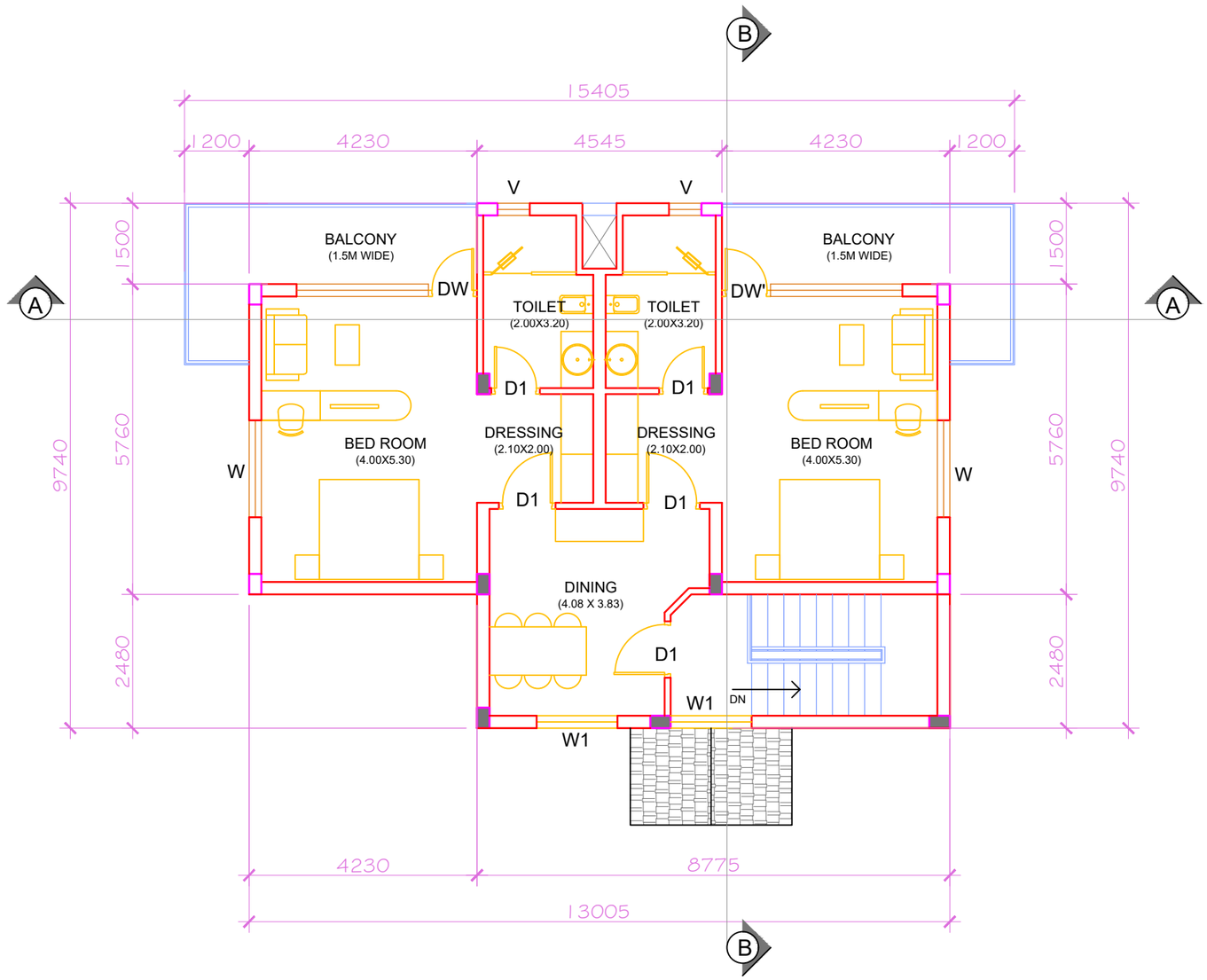

FIRST FLOOR PLAN

ORIENTATION	NOTE 1. ALL THE DIMENSIONS ARE IN MM. UNLESS SPECIFIED. 2. THIS DRAWING IS FOR TENDER PURPOSE ONLY. ACTUAL DRAWINGS WILL BE ISSUED DURING CONSTRUCTION AND MAY VARY AS PER SITE CONDITONS LIKE SPACE AVAILABILITY,TREES,ADJOINING BUILDING,SERVICE LAYOUT,ETC. 3. ANY DOUBT OR DESCRIPANCY IN THE DRAWING SHALL BE BROUGHT TO THE NOTICE OF THE ARCHITECT IN CHARGE BEFORE EXECUTING THE WORK. 4. THE DRAWING SHALL BE READ IN CONJECTION WITH RELEVANT STRUCTURAL DRAWINGS ALONG WITH RESPECTIVE DRAWINGS AND SPECIFICATIONS.	ARCHITECT (PMDSC) MR. DUNI CHAND DRAWN & DEALT BY MR. HIMANSHU	TEAM LEADER (PMDSC) MR.SUNIL KOUL PROJECT MANAGER (PIU) ER. RAKESH ARORA	CONSULTANT IPE GLOBAL IPE GLOBAL LTD. PROJECT MANAGEMENT CONSULTANT FOR I.D.I.P.T. FOR TOURISM, HIMACHAL PRADESH	ARCHITECT(PMU) AR. SAROJINI SHARMA TECHNICAL CONSULTANT	EXECUTIVE ENGINEER(PMU) ER. R.K. SHRIDHAR PROJECT DIRECTOR MR. MANOJ SHARMA	CLIENT IDIPT-HPTDB PROJECT IDIPT-HP (PROJECT1)	PACKAGE CREATION OF TOURIST CULTURAL CENTRE AT JANJHELI, DISTT. MANDI, (H.P.). PACKAGE NO. 15/2	DRAWING TITLE CONSTRUCTION DRAWING FIRST FLOOR PLAN	DRAWING NO. HP/CULTURAL CENTRE - JANJHELI /COTTAGE/PLAN/02 DATE :- 13/04/2018 SCALE:- 1:75

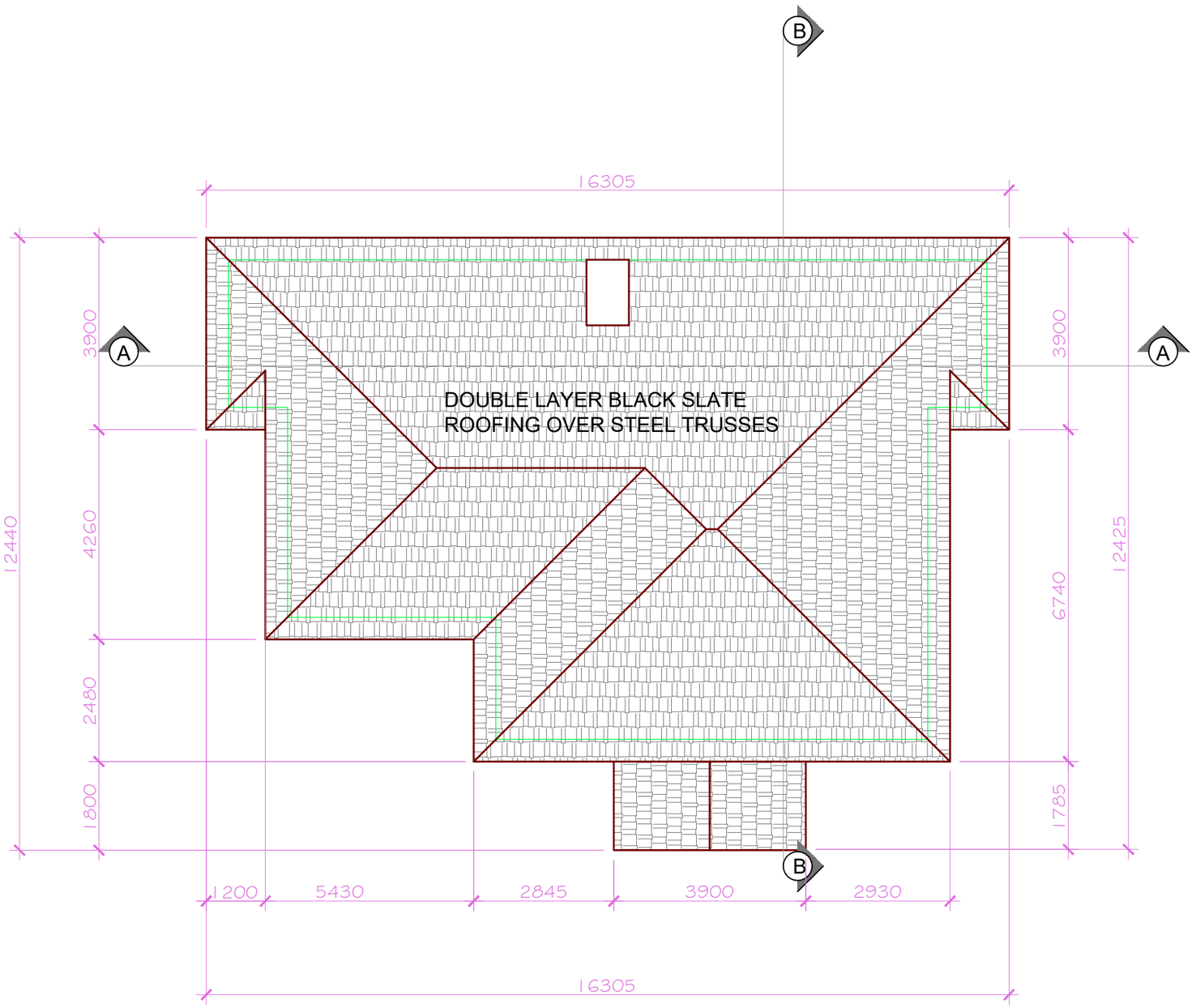

ROOF PLAN

ORIENTATION	**NOTE** 1. ALL THE DIMENSIONS ARE IN MM. UNLESS SPECIFIED. 2. THIS DRAWING IS FOR TENDER PURPOSE ONLY. ACTUAL DRAWINGS WILL BE ISSUED DURING CONSTRUCTION AND MAY VARY AS PER SITE CONDITIONS LIKE SPACE AVAILABILITY,TREES,ADJOINING BUILDING,SERVICE LAYOUT,ETC. 3. ANY DOUBT OR DESCRIPANCY IN THE DRAWING SHALL BE BROUGHT TO THE NOTICE OF THE ARCHITECT IN CHARGE BEFORE EXECUTING THE WORK. 4. THE DRAWING SHALL BE READ IN CONJECTION WITH RELEVANT STRUCTURAL DRAWINGS ALONG WITH RESPECTIVE DRAWINGS AND SPECIFICATIONS.	**ARCHITECT (PMDSC)** MR. DUNI CHAND **DRAWN & DEALT BY** MR. HIMANSHU	**TEAM LEADER (PMDSC)** MR.SUNIL KOUL **PROJECT MANAGER (PIU)** ER. RAKESH ARORA	**CONSULTANT** IPE GLOBAL **IPE GLOBAL LTD.** PROJECT MANAGEMENT CONSULTANT FOR I.D.J.P.T. FOR TOURISM, HIMACHAL PRADESH	**ARCHITECT(PMU)** AR. SAROJINI SHARMA **TECHNICAL CONSULTANT**	**EXECUTIVE ENGINEER(PMU)** ER. R.K. SHRIDHAR **PROJECT DIRECTOR** MR. MANOJ SHARMA	**CLIENT** IDIPT-HPTDB **PROJECT** IDIPT-HP (PROJECT1)	**PACKAGE** CREATION OF TOURIST CULTURAL CENTRE AT JANJHELI, DISTT. MANDI, (H.P.). PACKAGE NO. 15/2	**DRAWING TITLE** **CONSTRUCTION DRAWING** ROOF PLAN	**DRAWING NO.** HP/CULTURAL CENTRE - JANJHELI /COTTAGE/PLAN/03 **DATE :-** 13/04/2018 **SCALE:- 1:75**

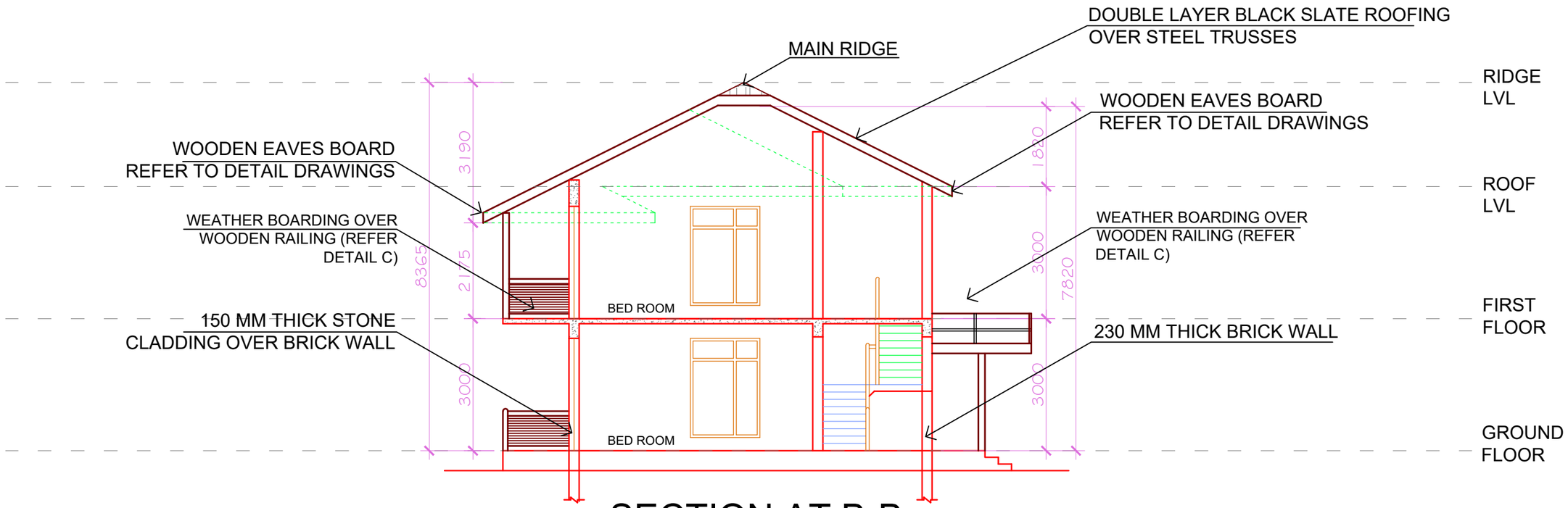

SECTION AT B-B

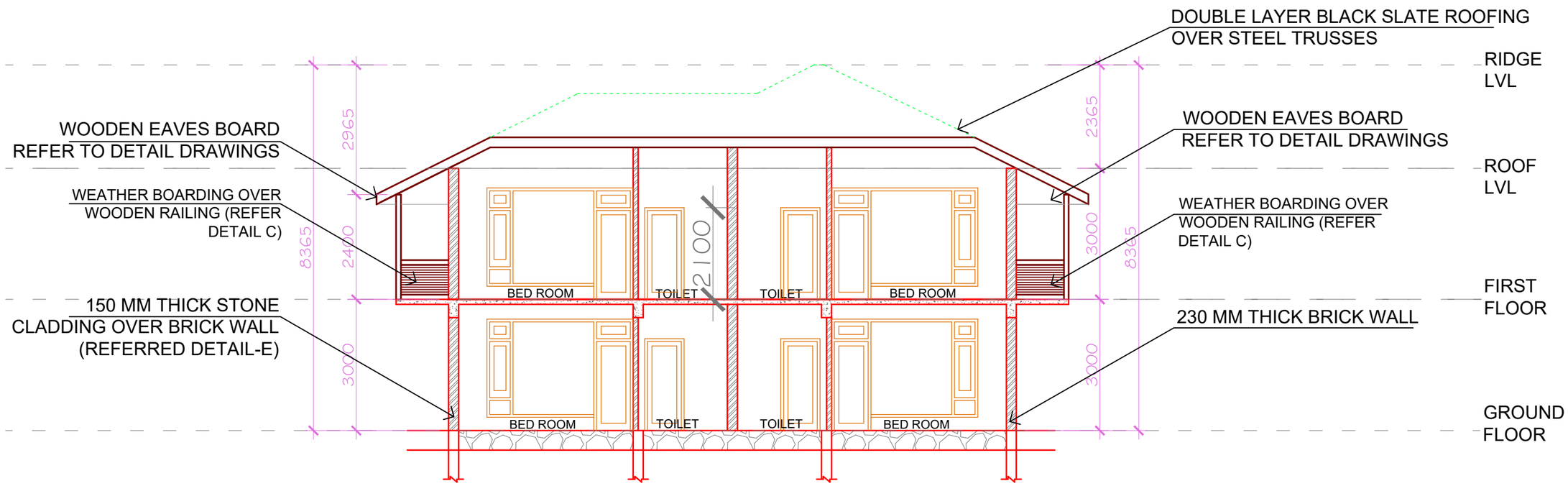

SECTION AT A-A

ORIENTATION	NOTE 1. ALL THE DIMENSIONS ARE IN MM. UNLESS SPECIFIED. 2. THIS DRAWING IS FOR TENDER PURPOSE ONLY. ACTUAL DRAWINGS WILL BE ISSUED DURING CONSTRUCTION AND MAY VARY AS PER SITE CONDITIONS LIKE SPACE AVAILABILITY,TREES,ADJOINING BUILDING,SERVICE LAYOUT,ETC. 3. ANY DOUBT OR DESCRIPANCY IN THE DRAWING SHALL BE BROUGHT TO THE NOTICE OF THE ARCHITECT IN CHARGE BEFORE EXECUTING THE WORK. 4. THE DRAWING SHALL BE READ IN CONJECTION WITH RELEVANT STRUCTURAL DRAWINGS ALONG WITH RESPECTIVE DRAWINGS AND SPECIFICATIONS.	ARCHITECT (PMDSC) MR. DUNI CHAND DRAWN & DEALT BY MR. HIMANSHU	TEAM LEADER (PMDSC) MR.SUNIL KOUL PROJECT MANAGER (PIU) ER. RAKESH ARORA	CONSULTANT IPE GLOBAL LTD. PROJECT MANAGEMENT CONSULTANT FOR I.D.J.P.T. FOR TOURISM, HIMACHAL PRADESH	ARCHITECT(PMU) AR. SAROJINI SHARMA TECHNICAL CONSULTANT	EXECUTIVE ENGINEER(PMU) ER. R.K. SHRIDHAR PROJECT DIRECTOR MR. MANOJ SHARMA	CLIENT IDIPT-HPTDB PROJECT IDIPT-HP (PROJECT1)	PACKAGE CREATION OF TOURIST CULTURAL CENTRE AT JANJHELI, DISTT. MANDI, (H.P.). PACKAGE NO. 15/2	DRAWING TITLE CONSTRUCTION DRAWING SECTION AT A-A & SECTION AT B-B	DRAWING NO. HP/CULTURAL CENTRE - JANJHELI /COTTAGE/SECTION/01 DATE :- 13/04/2018 SCALE:- 1:75

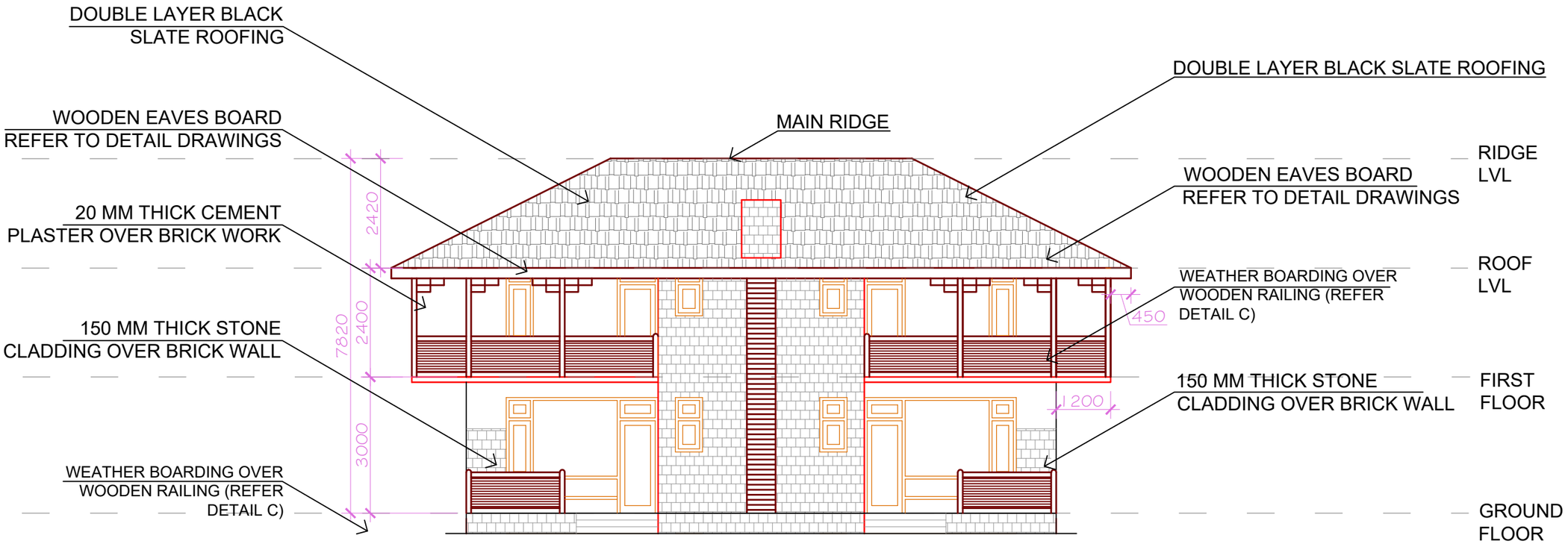

FRONT ELEVATION

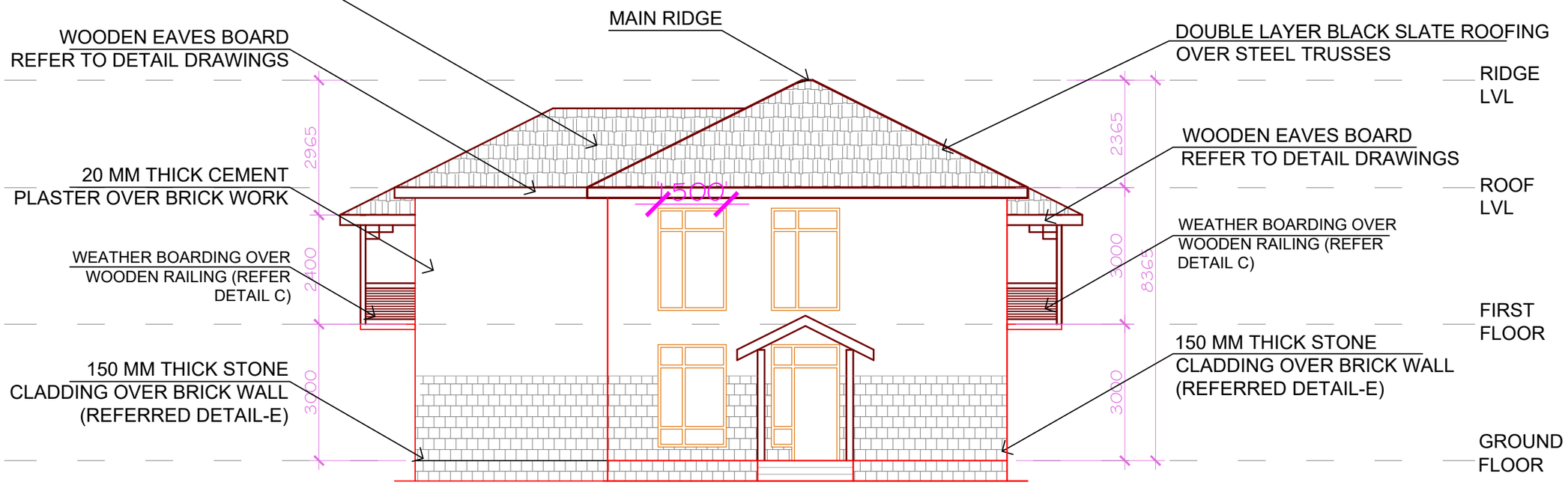

REAR ELEVATION

ORIENTATION	NOTE 1. ALL THE DIMENSIONS ARE IN MM. UNLESS SPECIFIED. 2. THIS DRAWING IS FOR TENDER PURPOSE ONLY. ACTUAL DRAWINGS WILL BE ISSUED DURING CONSTRUCTION AND MAY VARY AS PER SITE CONDITONS LIKE SPACE AVAILABILITY, TREES, ADJOINING BUILDING, SERVICE LAYOUT, ETC. 3. ANY DOUBT OR DESCREPANCY IN THE DRAWING SHALL BE BROUGHT TO THE NOTICE OF THE ARCHITECT IN CHARGE BEFORE EXECUTING THE WORK. 4. THE DRAWING SHALL BE READ IN CONJECTION WITH RELEVANT STRUCTURAL DRAWINGS ALONG WITH RESPECTIVE DRAWINGS AND SPECIFICATIONS.	ARCHITECT (PMDSC) MR. DUNI CHAND DRAWN & DEALT BY MR. HIMANSHU	TEAM LEADER (PMDSC) MR.SUNIL KOUL PROJECT MANAGER (PIU) ER. RAKESH ARORA	CONSULTANT IPE GLOBAL IPE GLOBAL LTD. PROJECT MANAGEMENT CONSULTANT FOR I.D.I.P.T. FOR TOURISM, HIMACHAL PRADESH	ARCHITECT(PMU) AR. SAROJINI SHARMA TECHNICAL CONSULTANT	EXECUTIVE ENGINEER(PMU) ER. R.K. SHRIDHAR PROJECT DIRECTOR MR. MANOJ SHARMA	CLIENT IDIPT-HPTDB PROJECT IDIPT-HP (PROJECT1)	PACKAGE CREATION OF TOURIST CULTURAL CENTRE AT JANJHELI, DISTT. MANDI, (H.P.). PACKAGE NO. 15/2	DRAWING TITLE CONSTRUCTION DRAWING FRONT & REAR ELEVATION	DRAWING NO. HP/CULTURAL CENTRE - JANJHELI /COTTAGE/ELEVATION/01 DATE :- 13/04/2018 SCALE:- 1:75

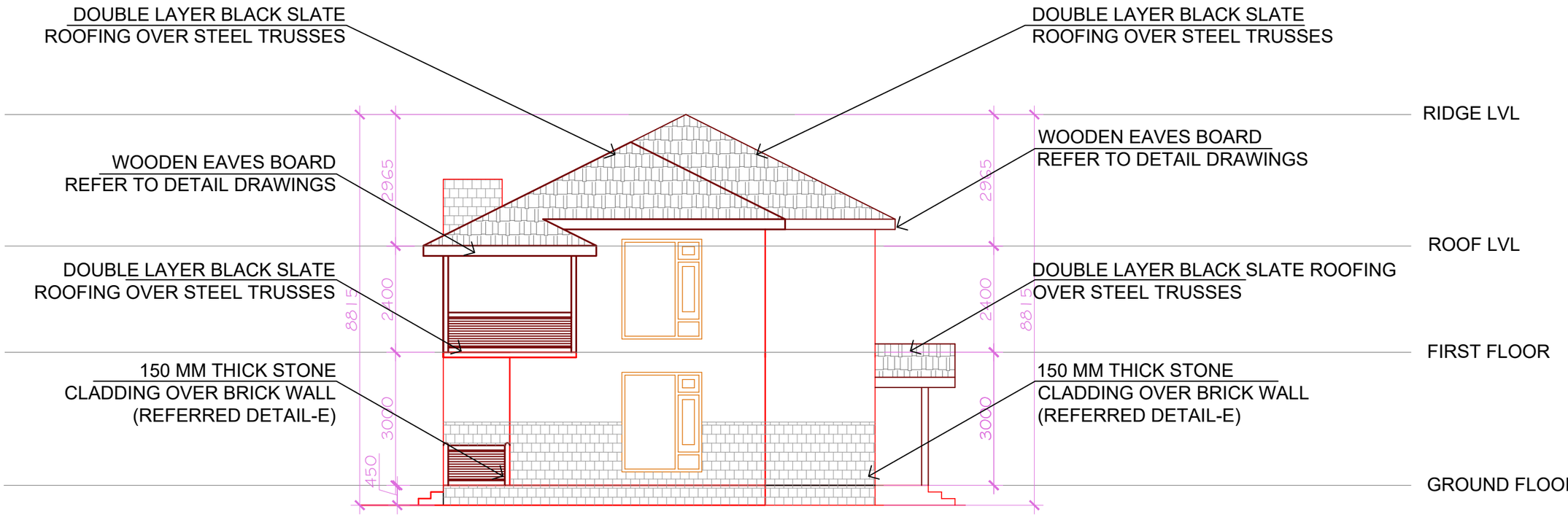

R.H.S ELEVATION

ORIENTATION	NOTE 1. ALL THE DIMENSIONS ARE IN MM. UNLESS SPECIFIED. 2. THIS DRAWING IS FOR TENDER PURPOSE ONLY. ACTUAL DRAWINGS WILL BE ISSUED DURING CONSTRUCTION AND MAY VARY AS PER SITE CONDITIONS LIKE SPACE AVAILABILITY, TREES, ADJOINING BUILDING, SERVICE LAYOUT, ETC. 3. ANY DOUBT OR DESCRIPANCY IN THE DRAWING SHALL BE BROUGHT TO THE NOTICE OF THE ARCHITECT IN CHARGE BEFORE EXECUTING THE WORK. 4. THE DRAWING SHALL BE READ IN CONJECTION WITH RELEVANT STRUCTURAL DRAWINGS ALONG WITH RESPECTIVE DRAWINGS AND SPECIFICATIONS.	ARCHITECT (PMDSC) MR. DUNI CHAND DRAWN & DEALT BY MR. HIMANSHU	TEAM LEADER (PMDSC) MR.SUNIL KOUL PROJECT MANAGER (PIU) ER. RAKESH ARORA	CONSULTANT IPE GLOBAL IPE GLOBAL LTD. PROJECT MANAGEMENT CONSULTANT FOR I.D.I.P.T. FOR TOURISM, HIMACHAL PRADESH	ARCHITECT(PMU) AR. SAROJINI SHARMA TECHNICAL CONSULTANT	EXECUTIVE ENGINEER(PMU) ER. R.K. SHRIDHAR PROJECT DIRECTOR MR. MANOJ SHARMA	CLIENT IDIPT-HPTDB PROJECT IDIPT-HP (PROJECT1)	PACKAGE CREATION OF TOURIST CULTURAL CENTRE AT JANJHELI, DISTT. MANDI, (H.P.). PACKAGE NO. 15/2	DRAWING TITLE CONSTRUCTION DRAWING R.H.S ELEVATION	DRAWING NO. HP/CULTURAL CENTRE - JANJHELI /COTTAGE/ELEVATION/02 DATE :- 13/04/2018 SCALE:- 1:75

COTTAGE BLOCK

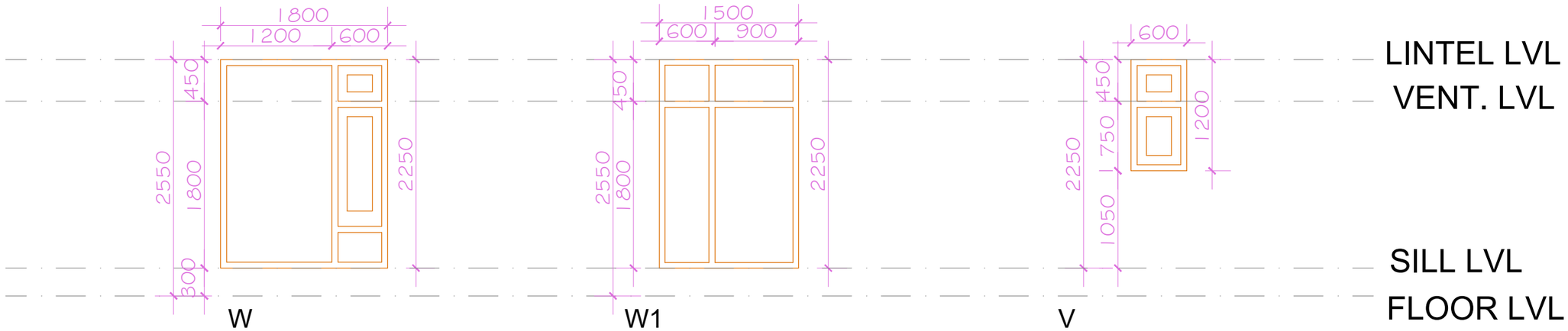

W
GROUND FLOOR - 2 NO.
FIRST FLOOR - 2 NO.

W1
GROUND FLOOR - 1 NO.
FIRST FLOOR - 2 NO.

V
GROUND FLOOR - 2 NO.
FIRST FLOOR - 2 NO.

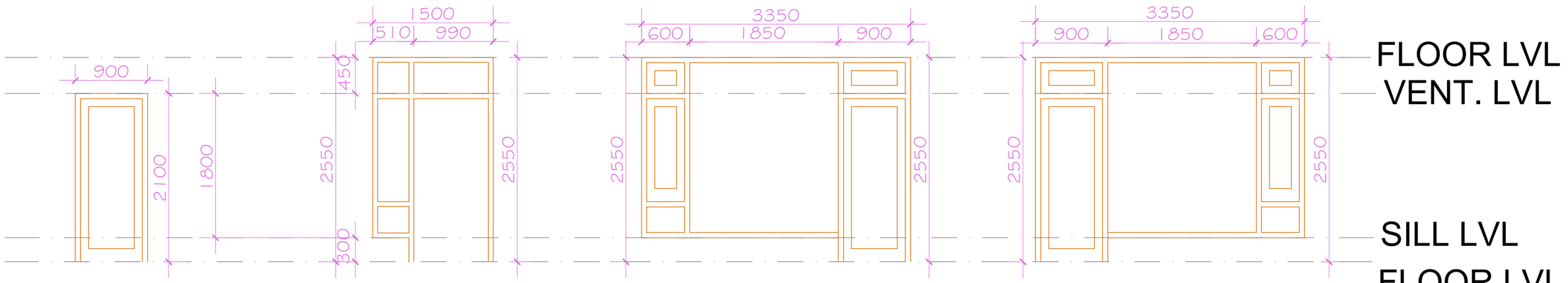

D1
GROUND FLOOR - 5 NO.
FIRST FLOOR - 5 NO.

DW1
GROUND FLOOR - 1 NO.
FIRST FLOOR - 0 NO.

DW
GROUND FLOOR - 1 NO.
FIRST FLOOR - 1 NO.

DW'
GROUND FLOOR - 1 NO.
FIRST FLOOR - 1 NO.

ORIENTATION	NOTE 1. ALL THE DIMENSIONS ARE IN MM. UNLESS SPECIFIED. 2. THIS DRAWING IS FOR TENDER PURPOSE ONLY. ACTUAL DRAWINGS WILL BE ISSUED DURING CONSTRUCTION AND MAY VARY AS PER SITE CONDITONS LIKE SPACE AVAILABILITY,TREES,ADJOINING BUILDING,SERVICE LAYOUT,ETC. 3. ANY DOUBT OR DESCRIPANCY IN THE DRAWING SHALL BE BROUGHT TO THE NOTICE OF THE ARCHITECT IN CHARGE BEFORE EXECUTING THE WORK. 4. THE DRAWING SHALL BE READ IN CONJECTION WITH RELEVANT STRUCTURAL DRAWINGS ALONG WITH RESPECTIVE DRAWINGS AND SPECIFICATIONS.	ARCHITECT (PMDSC) MR. DUNI CHAND DRAWN & DEALT BY MR. HIMANSHU	TEAM LEADER (PMDSC) MR.SUNIL KOUL PROJECT MANAGER (PIU) ER. RAKESH ARORA	CONSULTANT IPE GLOBAL IPE GLOBAL LTD. PROJECT MANAGEMENT CONSULTANT FOR I.D.I.P.T. FOR TOURISM, HIMACHAL PRADESH	ARCHITECT(PMU) AR. SAROJINI SHARMA TECHNICAL CONSULTANT	EXECUTIVE ENGINEER(PMU) ER. R.K. SHRIDHAR PROJECT DIRECTOR MR. MANOJ SHARMA	CLIENT IDIPT-HPTDB PROJECT IDIPT-HP (PROJECT1)	PACKAGE CREATION OF TOURIST CULTURAL CENTRE AT JANJHELI, DISTT. MANDI, (H.P.). PACKAGE NO. 15/2	DRAWING TITLE COTTAGE BLOCK - DOOR AND WINDOW DETAILS	DRAWING NO. HP/CULTURAL CENTRE - JANJHELI /COTTAGE/DWS/01 DATE :- 13/04/2018 SCALE:- 1:XXX

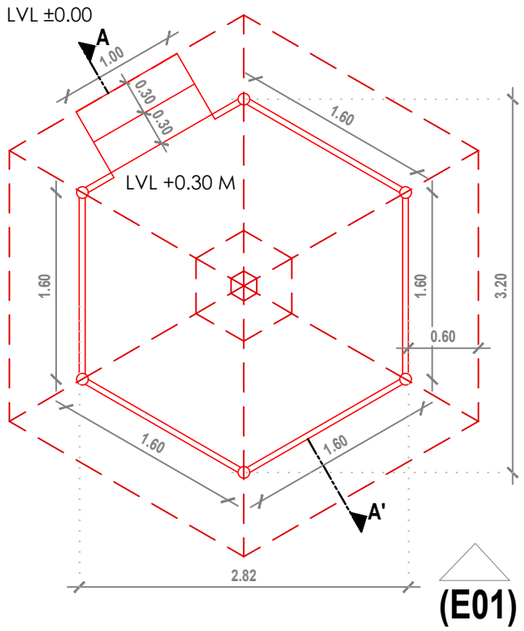

(E01)

PROPOSED GROUND FLOOR PLAN (1:75)

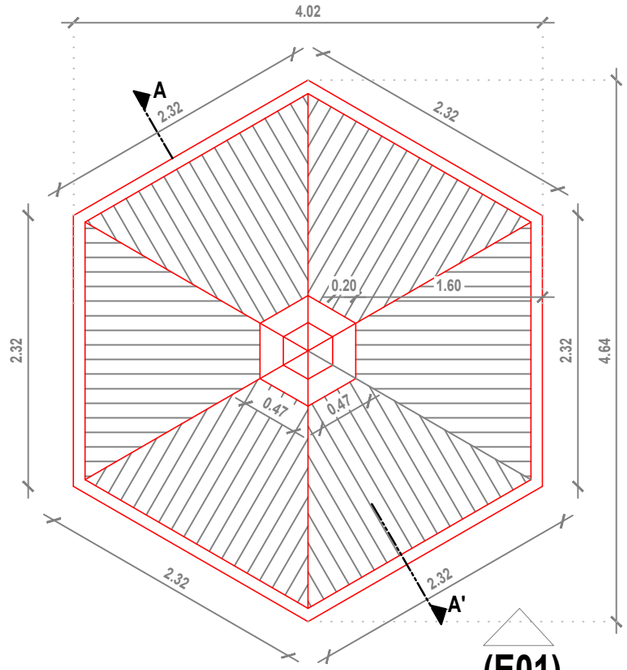

(E01)

PROPOSED ROOF PLAN (1:75)

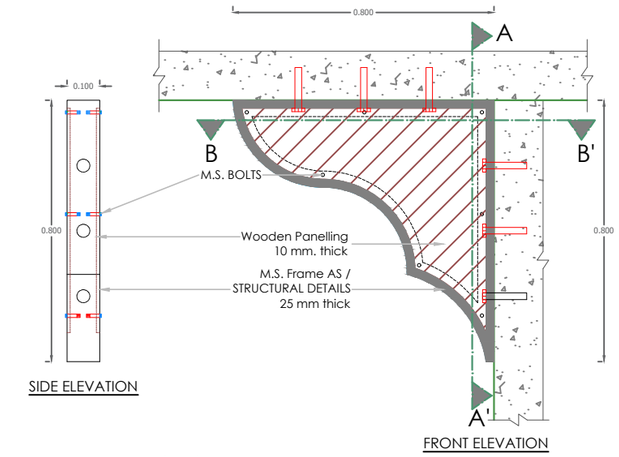

BRACKET DETAILS

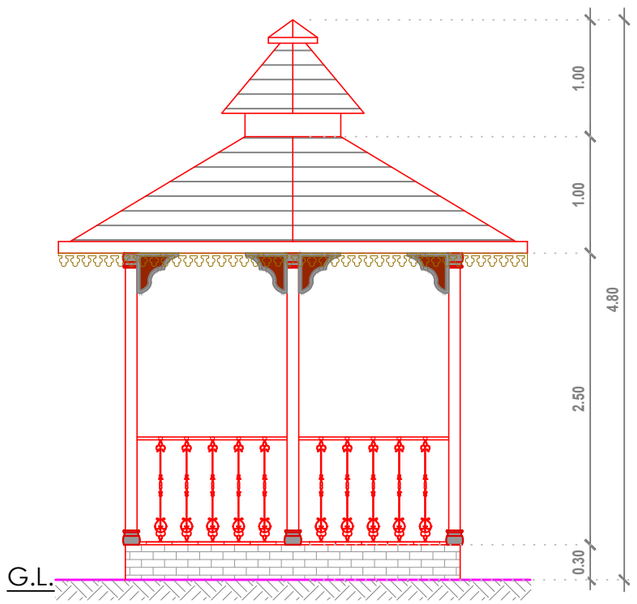

ELEVATION E-01 (1:75)

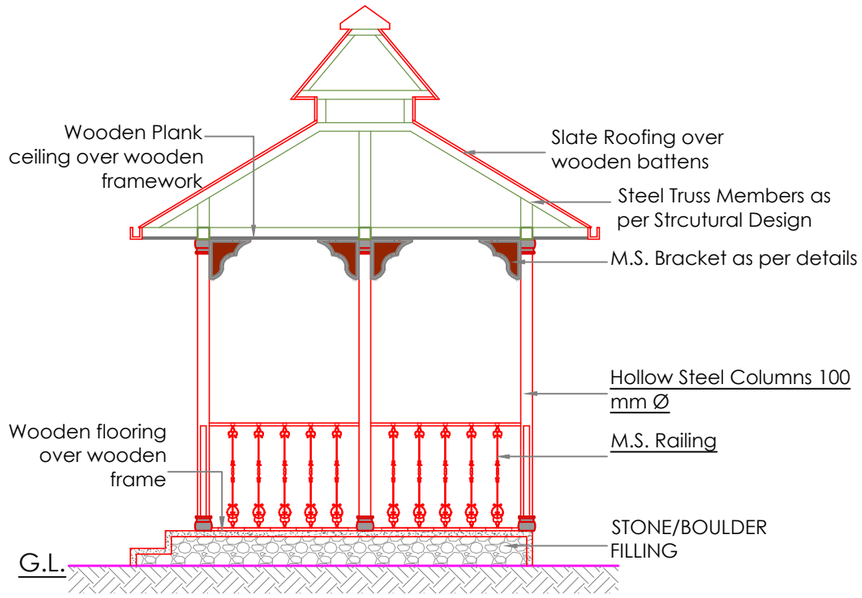

SECTION AA'

ORIENTATION	**NOTE** 1. ALL THE DIMENSIONS ARE IN MM. UNLESS SPECIFIED. 2. THIS DRAWING IS FOR TENDER PURPOSE ONLY. ACTUAL DRAWINGS WILL BE ISSUED DURING CONSTRUCTION AND MAY VARY AS PER SITE CONDITONS LIKE SPACE AVAILABILITY,TREES,ADJOINING BUILDING,SERVICE LAYOUT,ETC. 3. ANY DOUBT OR DESCRIPANCY IN THE DRAWING SHALL BE BROUGHT TO THE NOTICE OF THE ARCHITECT IN CHARGE BEFORE EXECUTING THE WORK. 4. THE DRAWING SHALL BE READ IN CONJECTION WITH RELEVANT STRUCTURAL DRAWINGS ALONG WITH RESPECTIVE DRAWINGS AND SPECIFICATIONS.	**ARCHITECT (PMDSC)** MR. DUNI CHAND **DRAWN & DEALT BY** MR. HIMANSHU	**TEAM LEADER (PMDSC)** MR.SUNIL KOUL **PROJECT MANAGER (PIU)** ER. RAKESH ARORA	**CONSULTANT** IPE GLOBAL **IPE GLOBAL LTD.** PROJECT MANAGEMENT CONSULTANT FOR I.D.I.P.T. FOR TOURISM, HIMACHAL PRADESH	**ARCHITECT(PMU)** AR. SAROJINI SHARMA **TECHNICAL CONSULTANT**	**EXECUTIVE ENGINEER(PMU)** ER. R.K. SHRIDHAR **PROJECT DIRECTOR** MR. MANOJ SHARMA	**CLIENT** IDIPT-HPTDB **PROJECT** IDIPT-HP (PROJECT1)	**PACKAGE** CREATION OF TOURIST CULTURAL CENTRE AT JANJHELI, DISTT. MANDI, (H.P.). PACKAGE NO. 15/2	**DRAWING TITLE** GAZEBO DETAIL	**DRAWING NO.** HP/CULTURAL CENTRE - JANJHELI /GAZEBO/01 **DATE :-** 13/04/2018 **SCALE:- NTS**

GAURD HUT

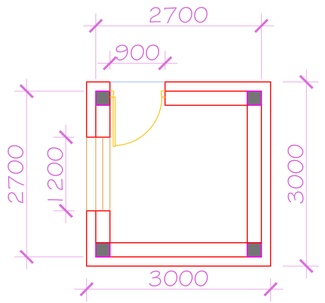

PLAN

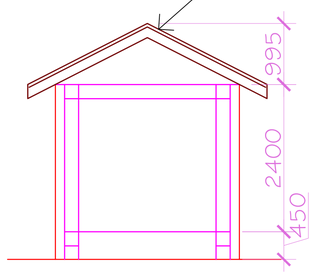

SECTION AA

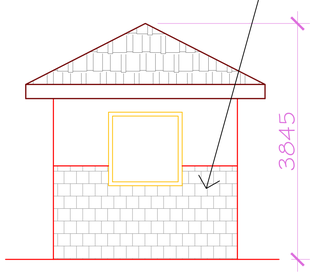

ELEVATION 1

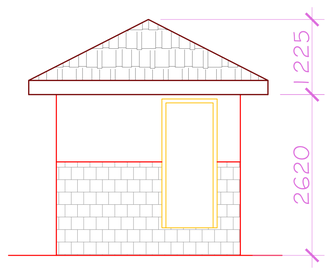

ELEVATION 2

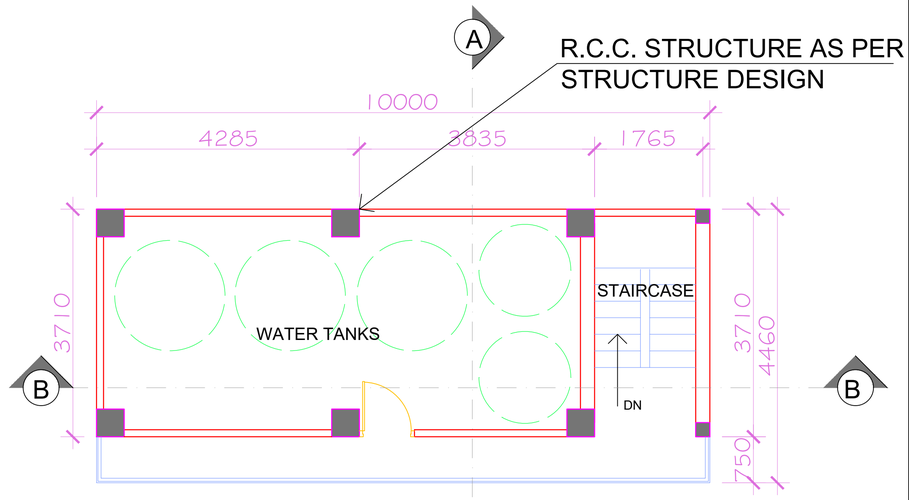

PLAN

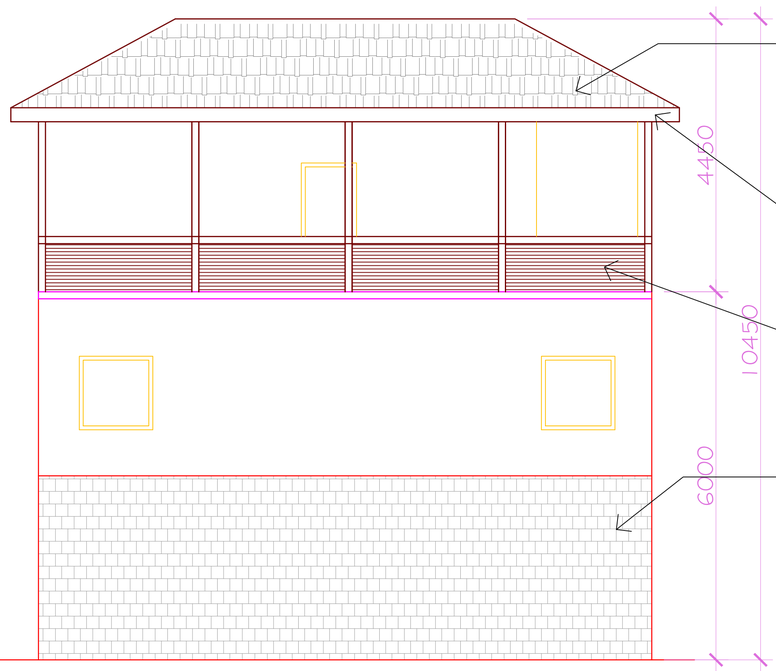

FRONT ELEVATION

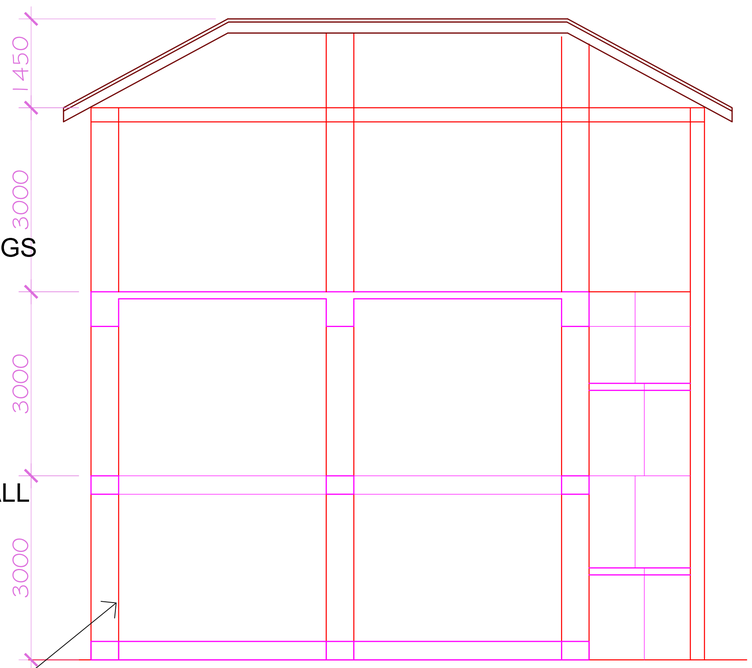

SECTION BB

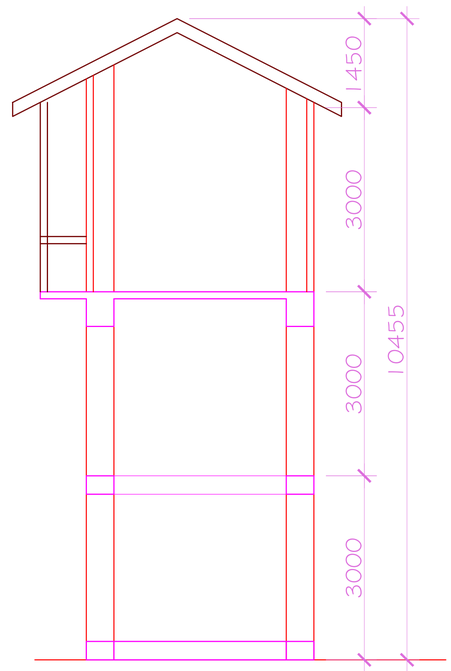

SECTION AA

ORIENTATION	NOTE	ARCHITECT (PMDSC)	TEAM LEADER (PMDSC)	CONSULTANT	ARCHITECT(PMU)	EXECUTIVE ENGINEER(PMU)	CLIENT	PACKAGE	DRAWING TITLE	DRAWING NO.
	1. ALL THE DIMENSIONS ARE IN MM. UNLESS SPECIFIED. 2. THIS DRAWING IS FOR TENDER PURPOSE ONLY. ACTUAL DRAWINGS WILL BE ISSUED DURING CONSTRUCTION AND MAY VARY AS PER SITE CONDITIONS LIKE SPACE AVAILABILITY,TREES,ADJOINING BUILDING,SERVICE LAYOUT,ETC. 3. ANY DOUBT OR DESCRIPANCY IN THE DRAWING SHALL BE BROUGHT TO THE NOTICE OF THE ARCHITECT IN CHARGE BEFORE EXECUTING THE WORK. 4. THE DRAWING SHALL BE READ IN CONJECTION WITH RELEVANT STRUCTURAL DRAWINGS ALONG WITH RESPECTIVE DRAWINGS AND SPECIFICATIONS.	MR. DUNI CHAND	MR.SUNIL KOUL	IPE GLOBAL Expanding Horizons, Enriching Lives IPE GLOBAL LTD. PROJECT MANAGEMENT CONSULTANT FOR I.D.I.P.T. FOR TOURISM, HIMACHAL PRADESH	AR. SAROJINI SHARMA	ER. R.K. SHRIDHAR	IDIPT-HPTDB	CREATION OF TOURIST CULTURAL CENTRE AT JANJHELI, DISTT. MANDI, (H.P.). PACKAGE NO. 15/2	WATER TANK TOWER AND GAURD HUT	HP/CULTURAL CENTRE - JANJHELI /TANK TOWER/01
		DRAWN & DEALT BY MR. HIMANSHU	PROJECT MANAGER (PIU) ER. RAKESH ARORA		TECHNICAL CONSULTANT	PROJECT DIRECTOR MR. MANOJ SHARMA	PROJECT IDIPT-HP (PROJECT1)			DATE :- 13/04/2018 SCALE:- 1:75

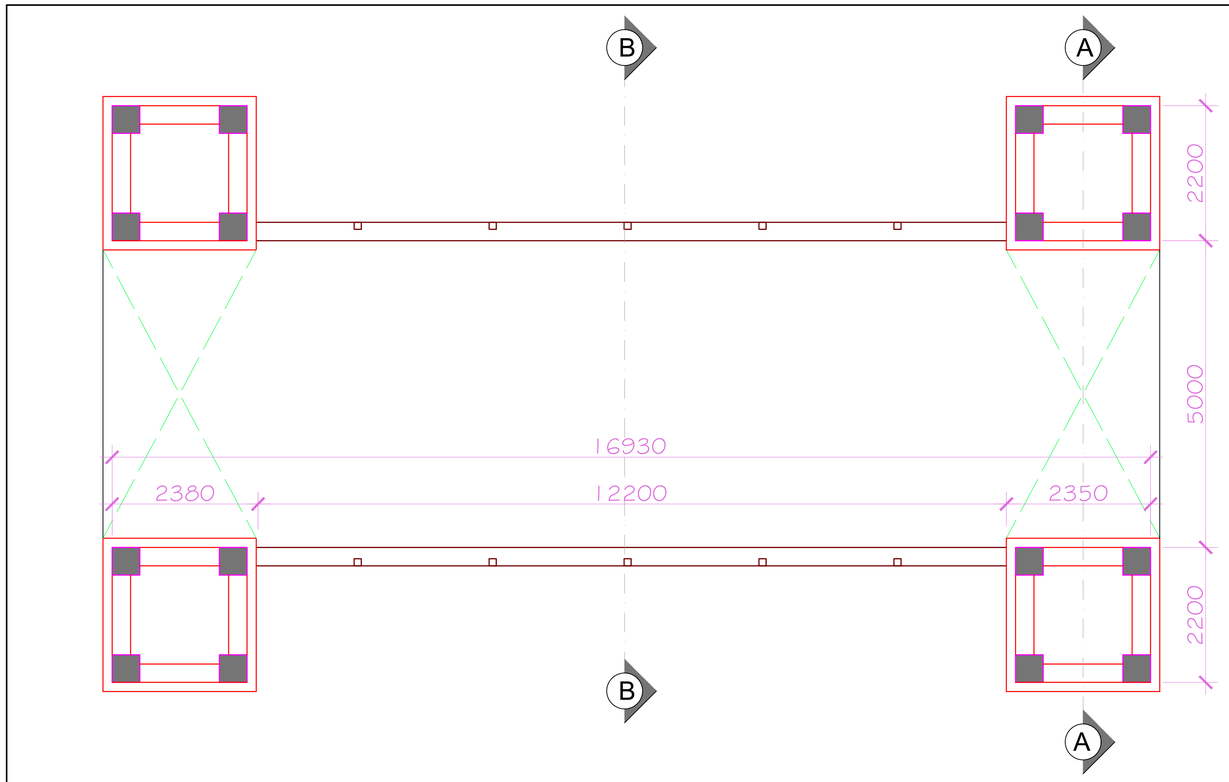

PLAN

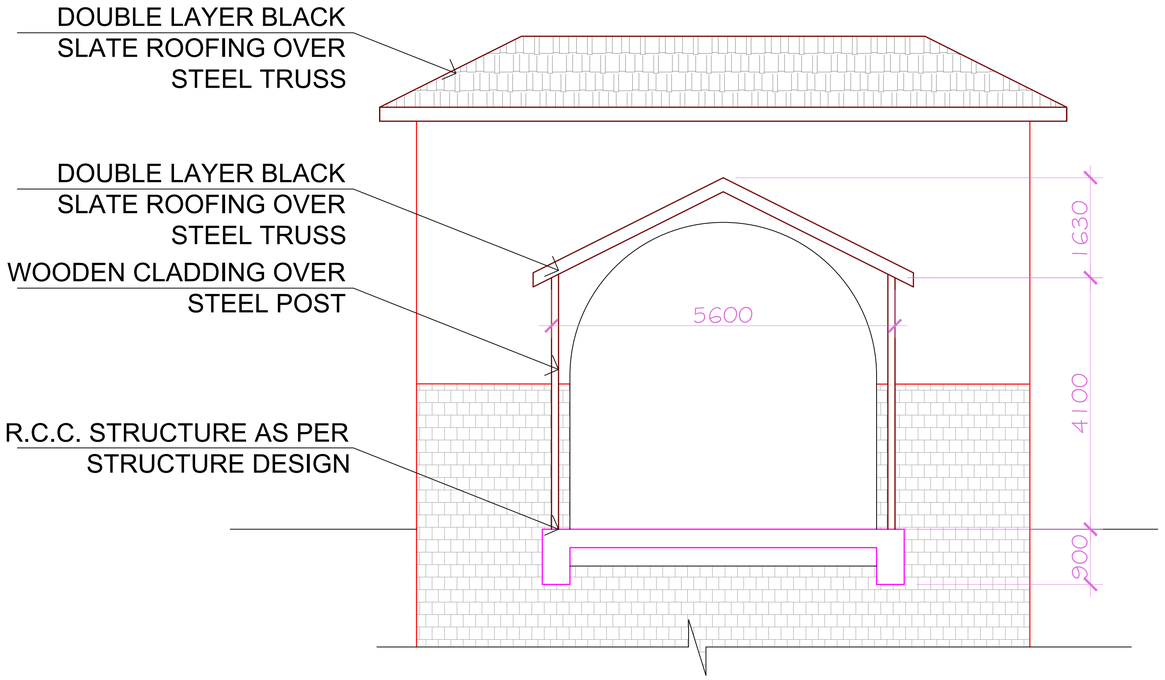

SECTION BB

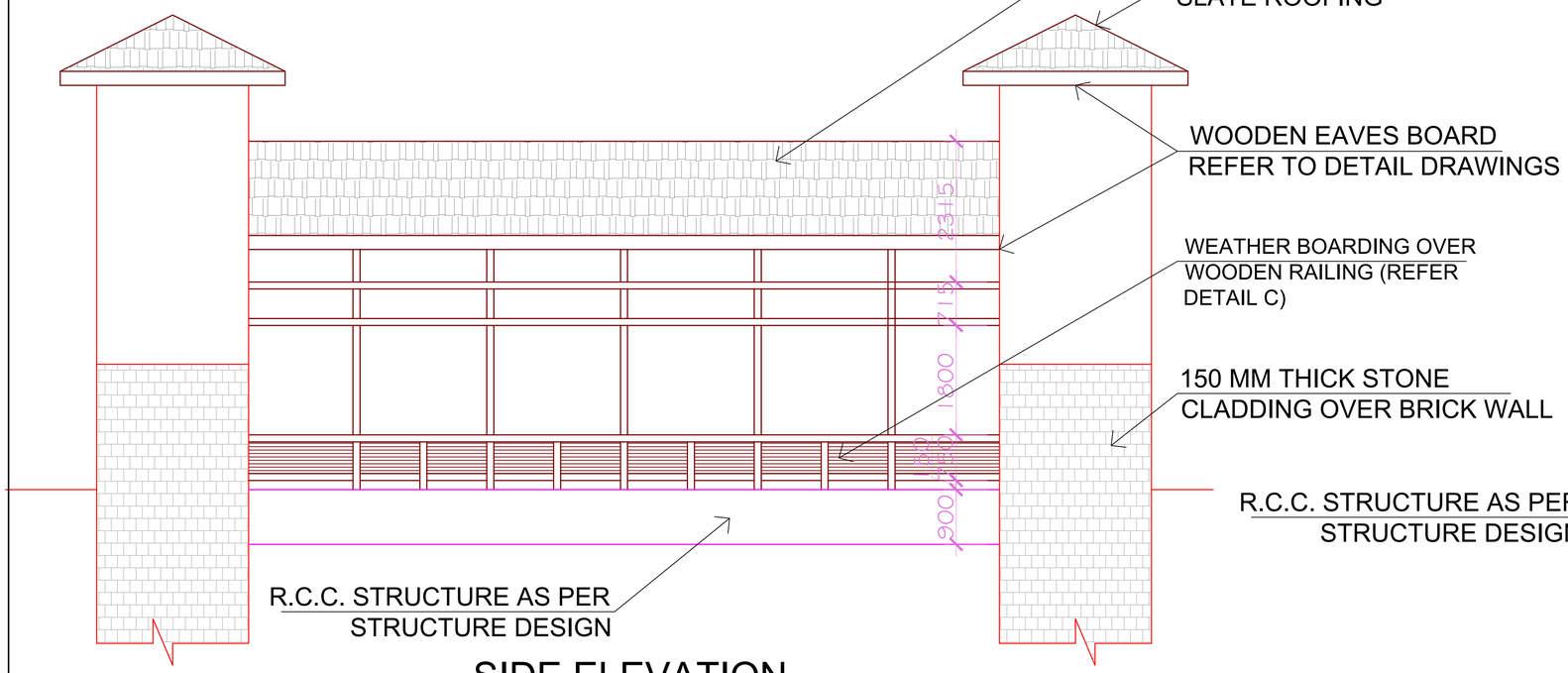

SIDE ELEVATION

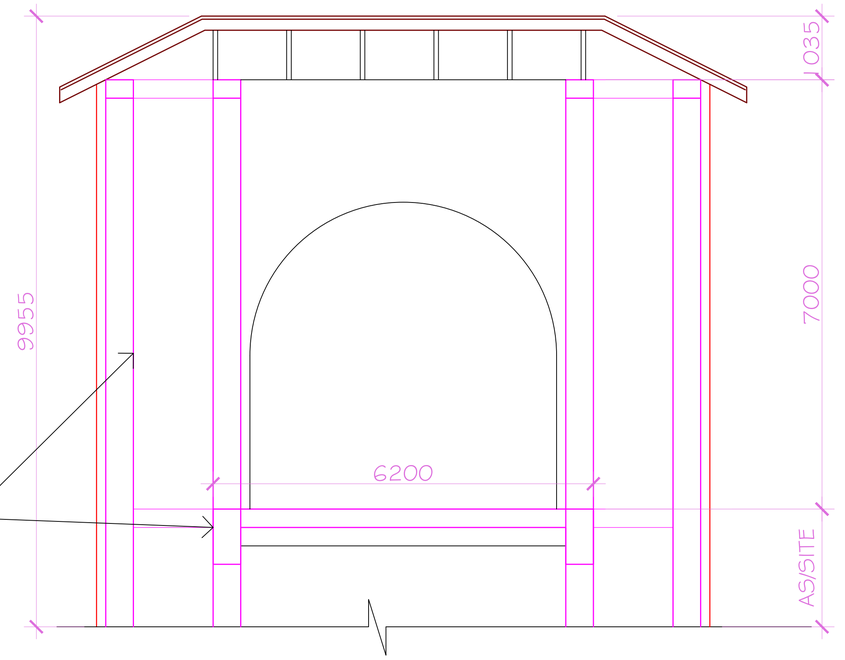

SECTION AA

ORIENTATION	NOTE 1. ALL THE DIMENSIONS ARE IN MM, UNLESS SPECIFIED. 2. THIS DRAWING IS FOR TENDER PURPOSE ONLY. ACTUAL DRAWINGS WILL BE ISSUED DURING CONSTRUCTION AND MAY VARY AS PER SITE CONDITONS LIKE SPACE AVAILABILITY,TREES,ADJOINING BUILDING,SERVICE LAYOUT,ETC. 3. ANY DOUBT OR DESCRIPANCY IN THE DRAWING SHALL BE BROUGHT TO THE NOTICE OF THE ARCHITECT IN CHARGE BEFORE EXECUTING THE WORK. 4. THE DRAWING SHALL BE READ IN CONJECTION WITH RELEVANT STRUCTURAL DRAWINGS ALONG WITH RESPECTIVE DRAWINGS AND SPECIFICATIONS.	ARCHITECT (PMDSC) MR. DUNI CHAND DRAWN & DEALT BY MR. HIMANSHU	TEAM LEADER (PMDSC) MR.SUNIL KOUL PROJECT MANAGER (PIU) ER. RAKESH ARORA	CONSULTANT IPE GLOBAL IPE GLOBAL LTD. PROJECT MANAGEMENT CONSULTANT FOR I.D.I.P.T. FOR TOURISM, HIMACHAL PRADESH	ARCHITECT(PMU) AR. SAROJINI SHARMA TECHNICAL CONSULTANT	EXECUTIVE ENGINEER(PMU) ER. R.K. SHRIDHAR PROJECT DIRECTOR MR. MANOJ SHARMA	CLIENT IDIPT-HPTDB PROJECT IDIPT-HP (PROJECT1)	PACKAGE CREATION OF TOURIST CULTURAL CENTRE AT JANJHELI, DISTT. MANDI, (H.P.). PACKAGE NO. 15/2	DRAWING TITLE BRIDGE DETAILS	DRAWING NO. HP/CULTURAL CENTRE - JANJHELI /BRIDGE/01 DATE :- 13/04/2018 SCALE:- 1:75

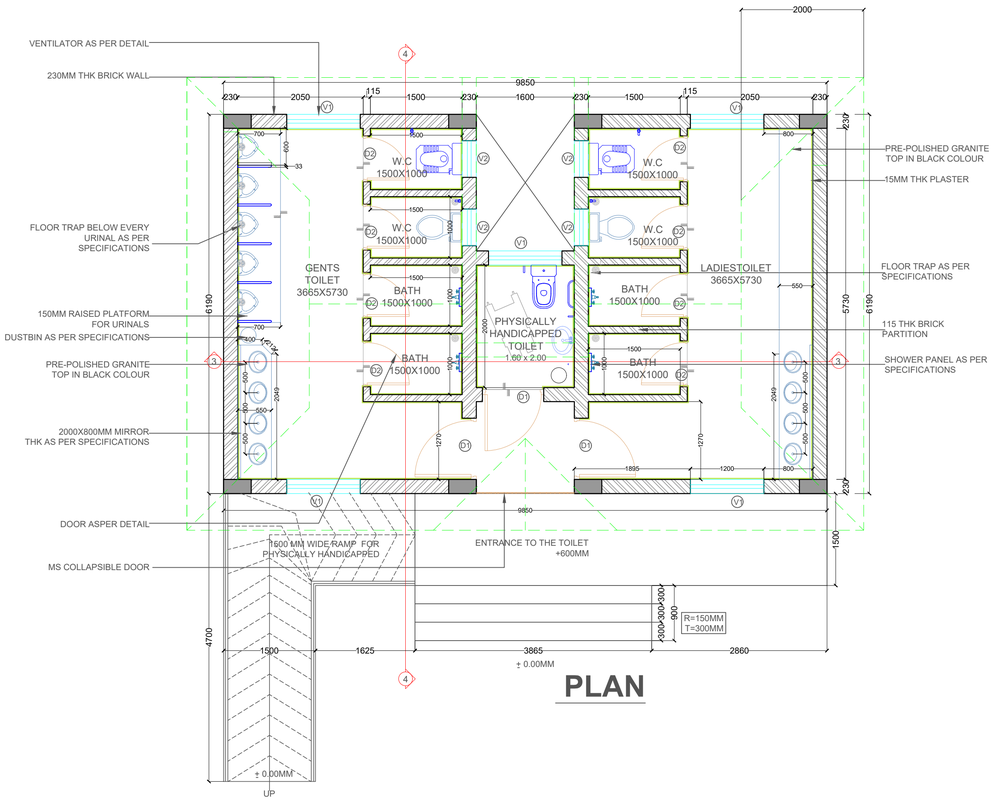

PLAN

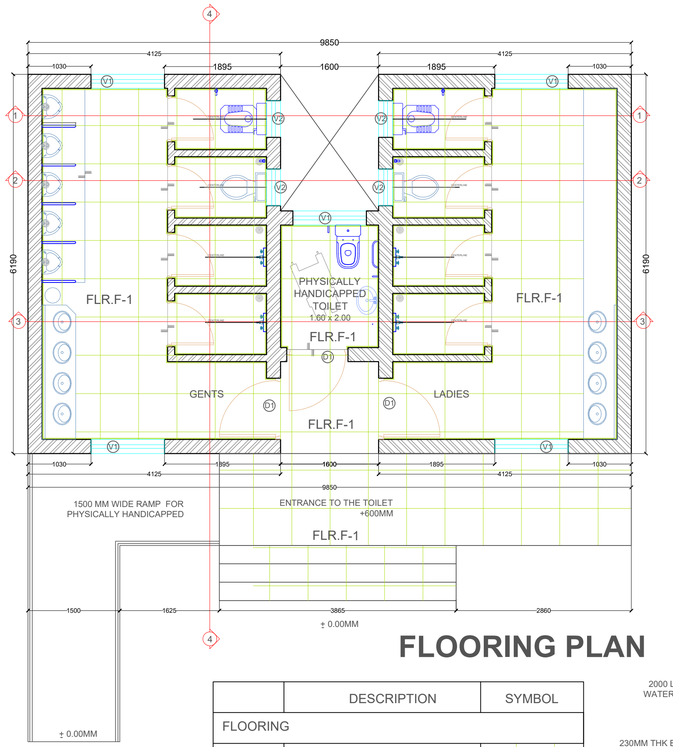

FLOORING PLAN

	DESCRIPTION	SYMBOL
FLOORING		
FLR.F-1	600 X 600 FLAMED GRANITE AS PER SLECTION	

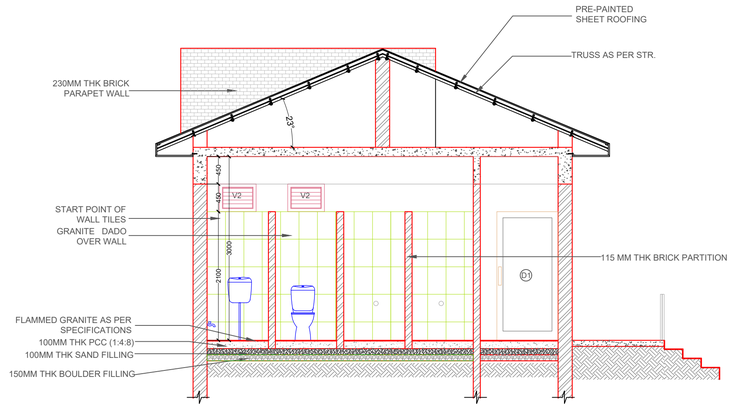

SECTION 4

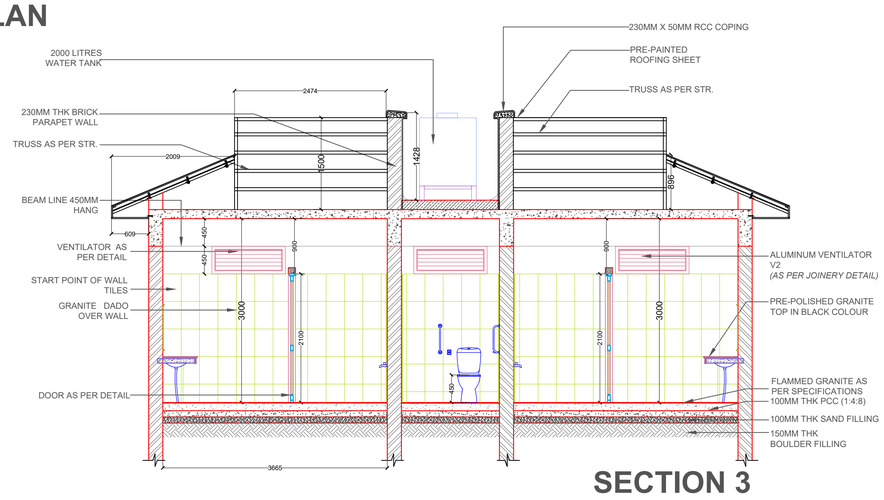

SECTION 3

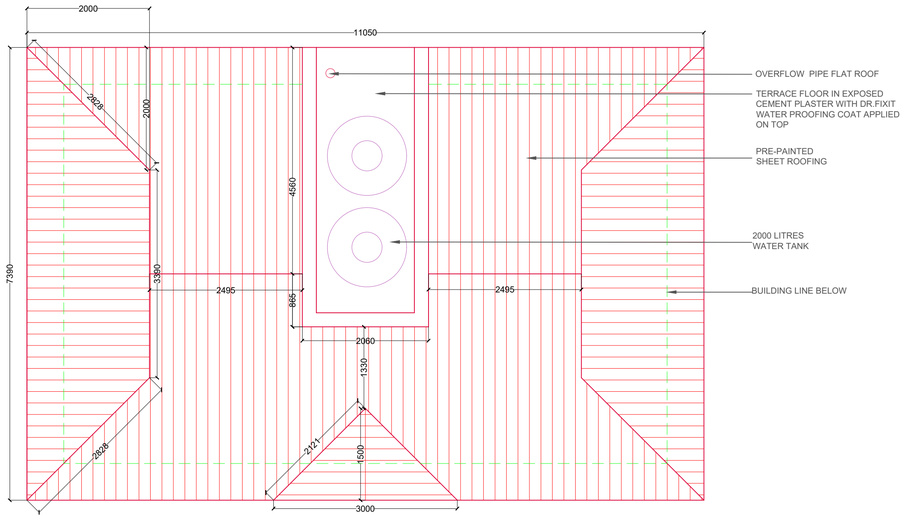

ROOF PLAN

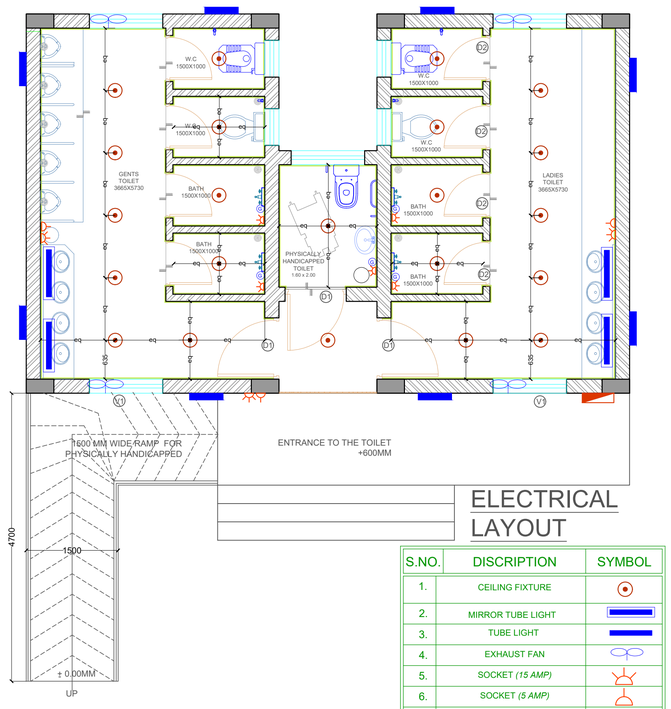

ELECTRICAL LAYOUT

S.NO.	DISCRIPTION	SYMBOL
1.	CEILING FIXTURE	
2.	MIRROR TUBE LIGHT	
3.	TUBE LIGHT	
4.	EXHAUST FAN	
5.	SOCKET *(15 AMP)*	
6.	SOCKET *(5 AMP)*	
7.	GEYSER	G
8.	MCB.DISTRIBUTION BOARD	

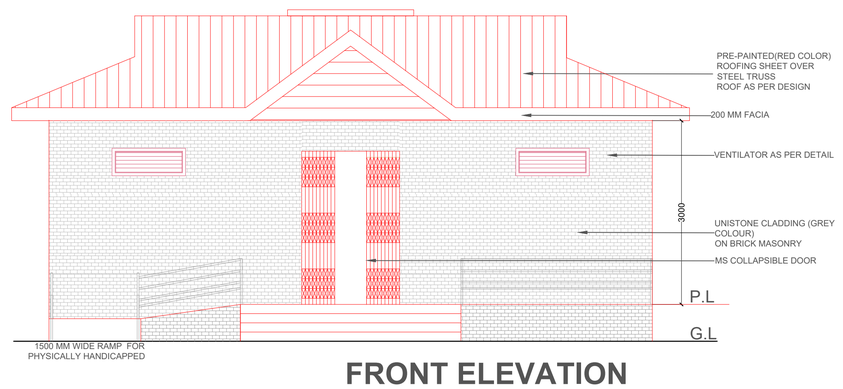

FRONT ELEVATION

ORIENTATION

NOTE

1. ALL THE DIMENSIONS ARE IN MM. UNLESS SPECIFIED.
2. THIS DRAWING IS FOR TENDER PURPOSE ONLY. ACTUAL DRAWINGS WILL BE ISSUED DURING CONSTRUCTION AND MAY VARY AS PER SITE CONDITONS LIKE SPACE AVAILABILITY,TREES,ADJOINING BUILDING,SERVICE LAYOUT,ETC.
3. ANY DOUBT OR DESCRIPANCY IN THE DRAWING SHALL BE BROUGHT TO THE NOTICE OF THE ARCHITECT IN CHARGE BEFORE EXECUTING THE WORK.
4. THE DRAWING SHALL BE READ IN CONJECTION WITH RELEVANT STRUCTURAL DRAWINGS ALONG WITH RESPECTIVE DRAWINGS AND SPECIFICATIONS.

ARCHITECT (DSC)
Mr. Duni Chand

DRAWN & DEALT BY
Mr. Himanshu

TEAM LEADER (PMDSC)
MR. SUNIL KOUL

PROJECT MANAGER (PIU)
MR. Rakesh Arora

CONSULTANT
IPE GLOBAL
Expanding Horizons, Enriching Lives.
IPE GLOBAL PVT. LTD.
PROJECT MANAGEMENT CONSULTANT FOR I.D.I.P.T. FOR TOURISM, HIMACHAL PRADESH

ARCHITECT(PMU)
AR. SAROJINI SHARMA

EXECUTIVE ENGINEER(PMU)
ER. DEVENDER SINGH CHAUHAN

CONS. ARCHITECT
(PMU) (PIU)

CLIENT
IDIPT-HPTDB

PROJECT
IDIPT-HP (PROJECT3)

PACKAGE
DPR 15.2
CREATION OF TOURIST CULTURAL CENTRE AT JANJHELI

DRAWING TITLE
DPR DRAWING
TOILET BLOCK

DRAWING NO.
HP/CULTURAL CENTRE - JANJHELI /TOILET BLOCK/01

DATE :- 25.03.2018

SCALE:- 1:100

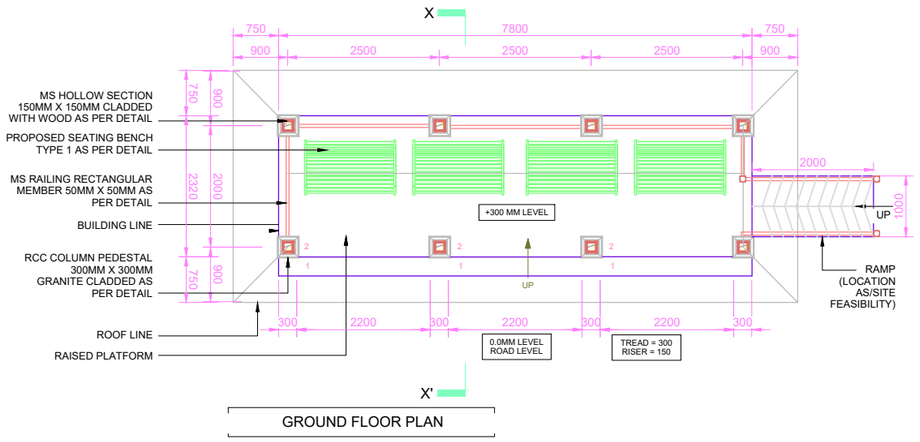

GROUND FLOOR PLAN

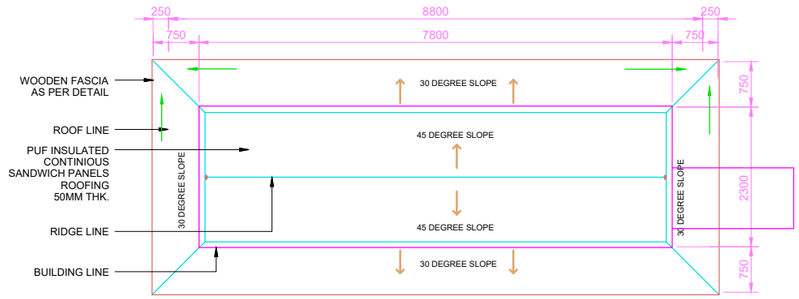

ROOF PLAN

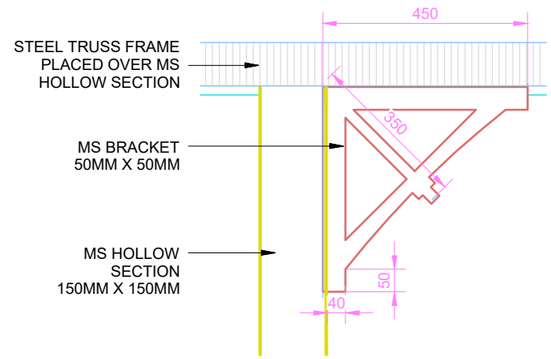

DETAIL B - BRACKET DETAIL

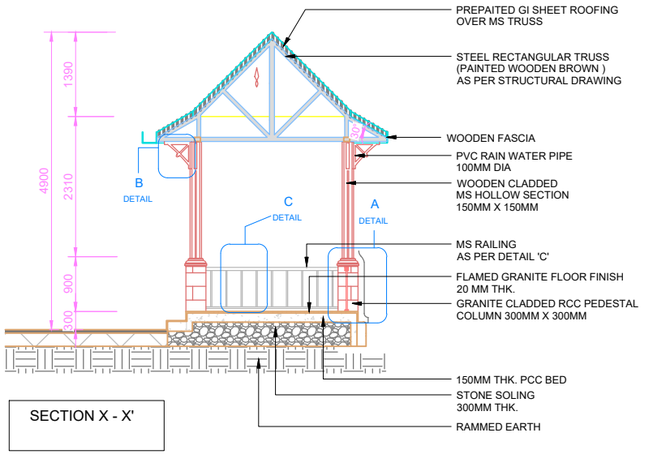

SECTION X - X'

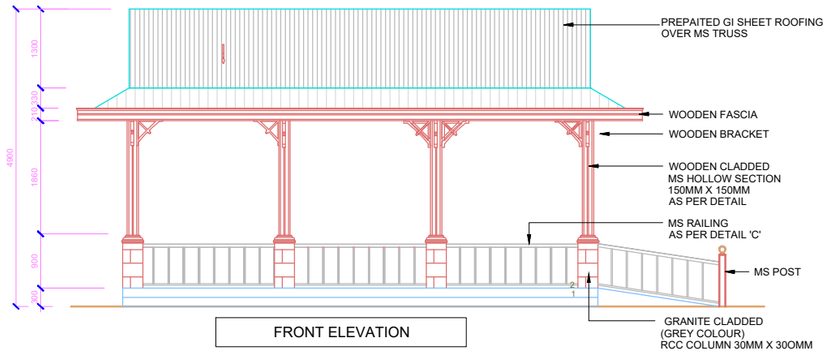

FRONT ELEVATION

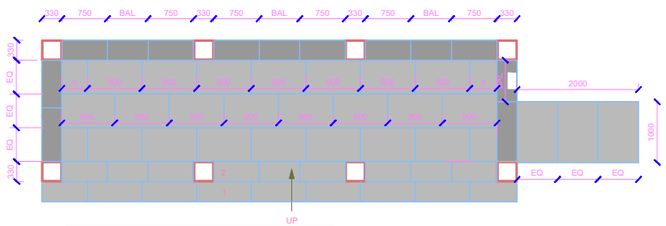

FLOORING PATTERN

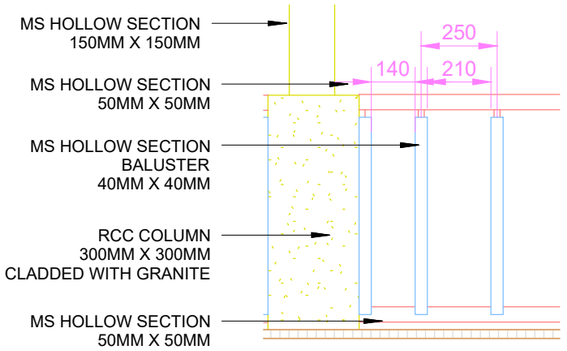

DETAIL A - RAILING

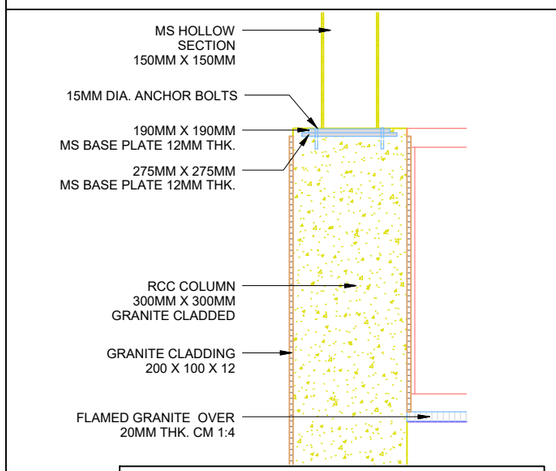

DETAIL C - MS HOLLOW SECTION COLUMN

ORIENTATION

NOTE

1. ALL THE DIMENSIONS ARE IN MM. UNLESS SPECIFIED.
2. THIS DRAWING IS FOR TENDER PURPOSE ONLY. ACTUAL DRAWINGS WILL BE ISSUED DURING CONSTRUCTION AND MAY VARY AS PER SITE CONDITONS LIKE SPACE AVAILABILITY,TREES,ADJOINING BUILDING,SERVICE LAYOUT,ETC.
3. ANY DOUBT OR DESCRIPANCY IN THE DRAWING SHALL BE BROUGHT TO THE NOTICE OF THE ARCHITECT IN CHARGE BEFORE EXECUTING THE WORK.
4. THE DRAWING SHALL BE READ IN CONJECTION WITH RELEVANT STRUCTURAL DRAWINGS ALONG WITH RESPECTIVE DRAWINGS AND SPECIFICATIONS.

ARCHITECT (DSC)
Mr. Duni Chand

DRAWN & DEALT BY
Mr. Himanshu

TEAM LEADER (PMDSC)
MR. SUNIL KOUL

PROJECT MANAGER (PIU)
MR. Rakesh Arora

CONSULTANT
IPE GLOBAL PVT. LTD.
PROJECT MANAGEMENT CONSULTANT FOR I.D.J.P.T. FOR TOURISM, HIMACHAL PRADESH

ARCHITECT(PMU)
AR. SAROJINI SHARMA

EXECUTIVE ENGINEER(PMU)
ER. DEVENDER SINGH CHAUHAN

CONS. ARCHITECT
(PMU) (PIU)

CLIENT
IDIPT-HPTDB

PROJECT
IDIPT-HP (PROJECT3)

PACKAGE
DPR 15.2
CREATION OF TOURIST CULTURAL CENTRE AT JANJHELI

DRAWING TITLE
RAIN SHELTER

DRAWING NO.
HP/CULTURAL CENTRE - JANJHELI /RAIN SHELTER/01

DATE :- 25.03.2018

SCALE:- 1:100

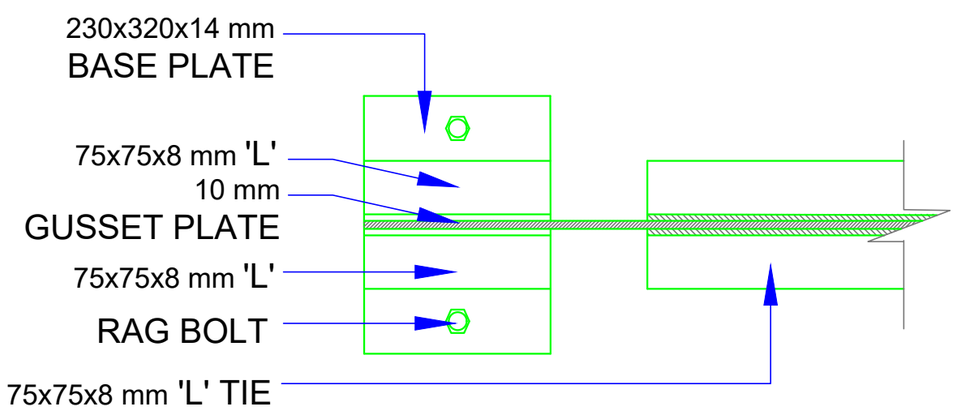

PLAN AT X

WOODEN EAVES BOARD PATTERN

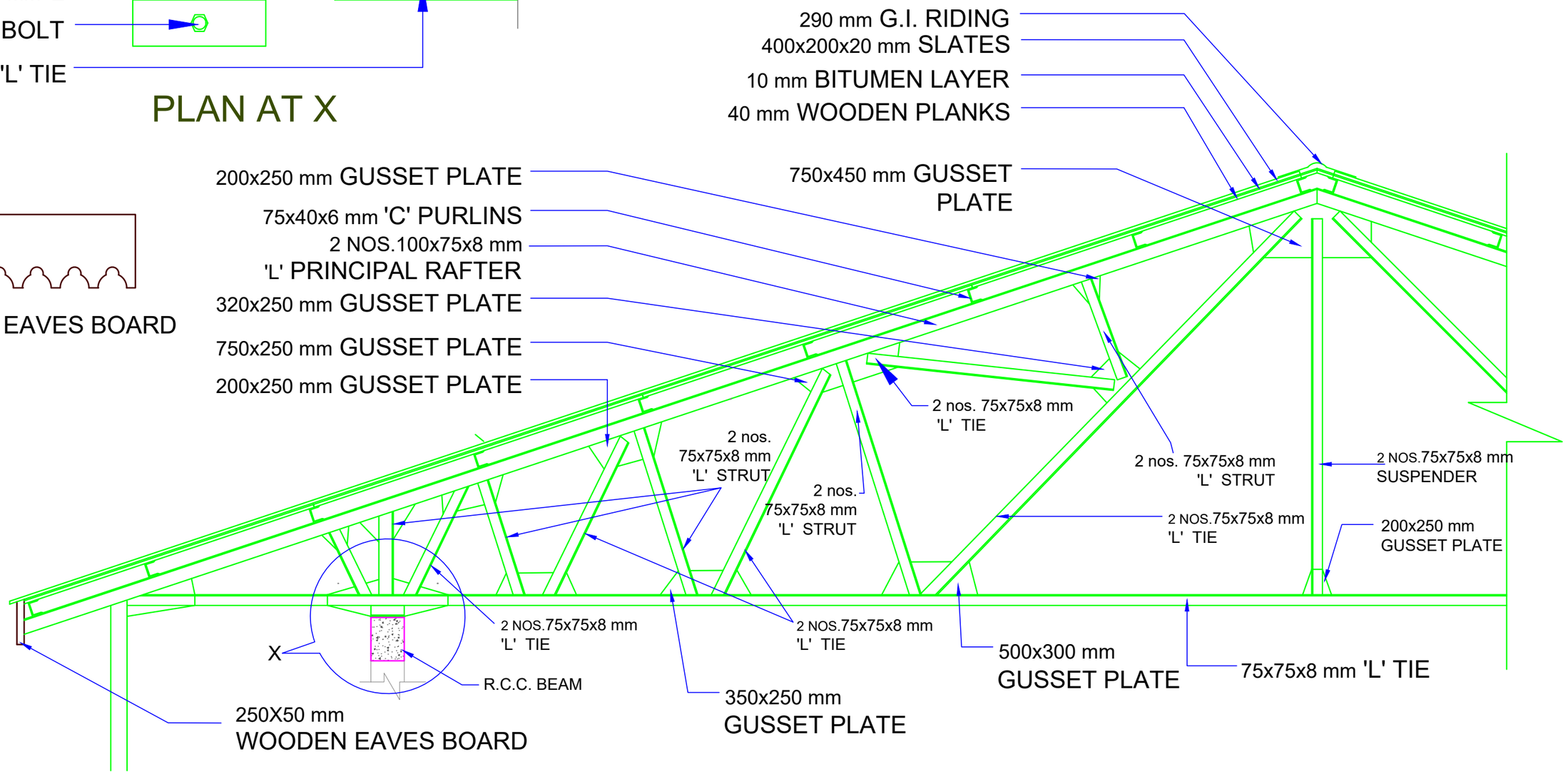

TYPICAL STEEL TRUSS DETAIL - TR-A

(SCALE - 1:75)

ORIENTATION	NOTE 1. ALL THE DIMENSIONS ARE IN MM. UNLESS SPECIFIED. 2. THIS DRAWING IS FOR TENDER PURPOSE ONLY, ACTUAL DRAWINGS WILL BE ISSUED DURING CONSTRUCTION AND MAY VARY AS PER SITE CONDITONS LIKE SPACE AVAILABILITY,TREES,ADJOINING BUILDING,SERVICE LAYOUT,ETC. 3. ANY DOUBT OR DESCRIPANCY IN THE DRAWING SHALL BE BROUGHT TO THE NOTICE OF THE ARCHITECT IN CHARGE BEFORE EXECUTING THE WORK. 4. THE DRAWING SHALL BE READ IN CONJECTION WITH RELEVANT STRUCTURAL DRAWINGS ALONG WITH RESPECTIVE DRAWINGS AND SPECIFICATIONS.	ARCHITECT (PMDSC) MR. DUNI CHAND DRAWN & DEALT BY MR. HIMANSHU	TEAM LEADER (PMDSC) MR.SUNIL KOUL PROJECT MANAGER (PIU) ER. RAKESH ARORA	CONSULTANT IPE GLOBAL IPE GLOBAL LTD. PROJECT MANAGEMENT CONSULTANT FOR I.D.I.P.T. FOR TOURISM, HIMACHAL PRADESH	ARCHITECT(PMU) AR. SAROJINI SHARMA TECHNICAL CONSULTANT	EXECUTIVE ENGINEER(PMU) ER. R.K. SHRIDHAR PROJECT DIRECTOR MR. MANOJ SHARMA	CLIENT IDIPT-HPTDB PROJECT IDIPT-HP (PROJECT1)	PACKAGE CREATION OF TOURIST CULTURAL CENTRE AT JANJHELI, DISTT. MANDI, (H.P.). PACKAGE NO. 15/2	DRAWING TITLE TYPICAL TRUSS DETAIL (TR - A)	DRAWING NO. HP/CULTURAL CENTRE - JANJHELI /DETAIL/TRUSS TRA/01 DATE :- 12/04/2018 SCALE:- 1:75

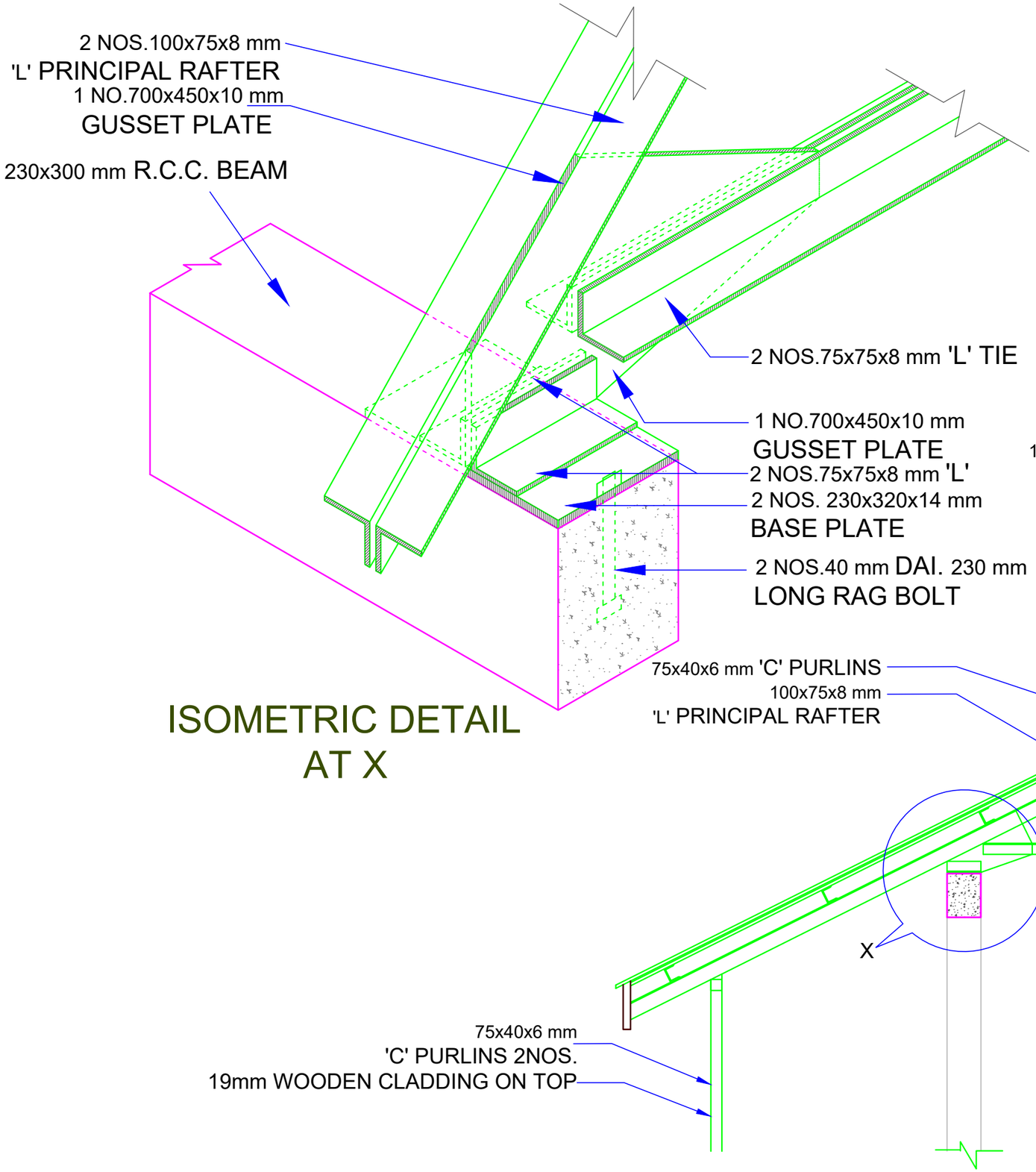

ISOMETRIC DETAIL AT X

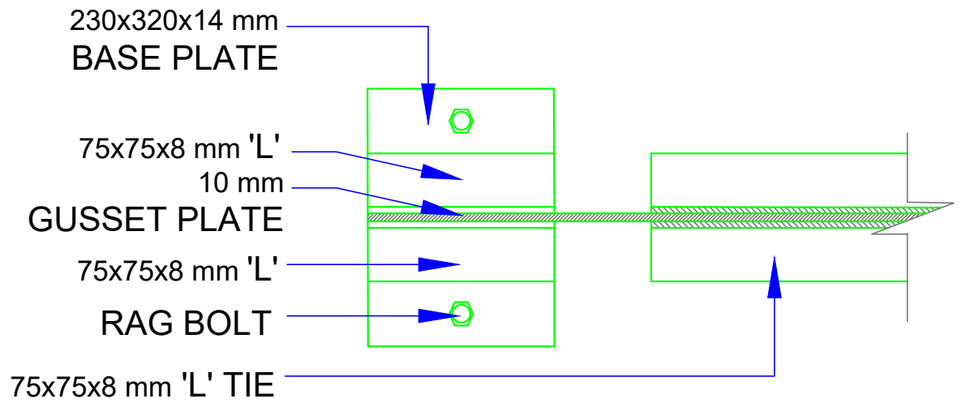

PLAN AT X

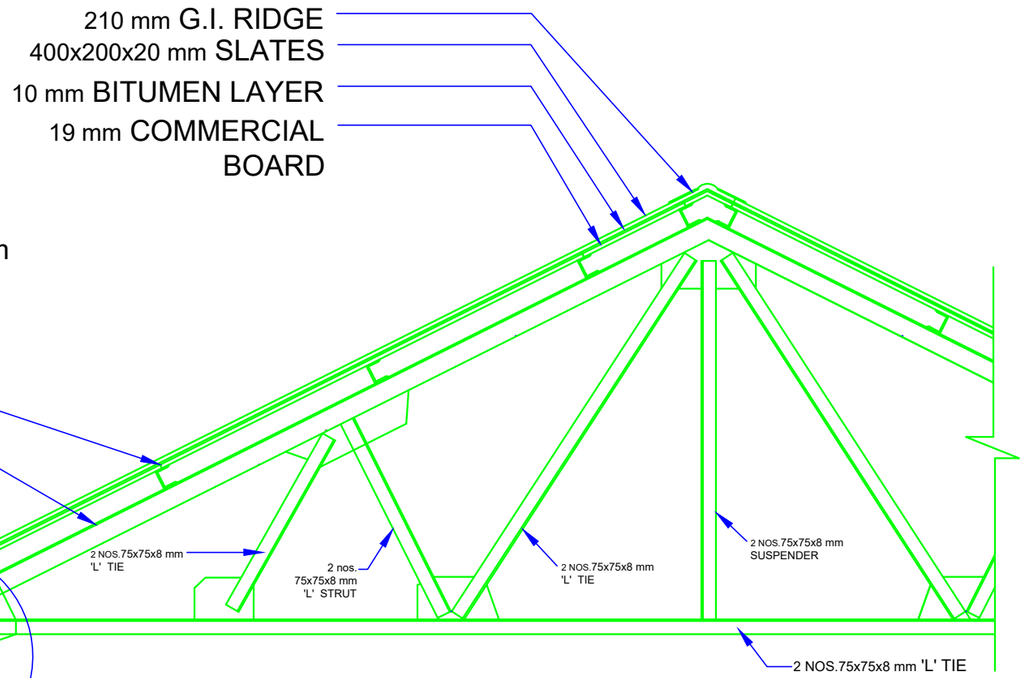

STEEL TRUSS DETAIL - TR-B
(SCALE - 1:75)

ORIENTATION	NOTE 1. ALL THE DIMENSIONS ARE IN MM, UNLESS SPECIFIED. 2. THIS DRAWING IS FOR TENDER PURPOSE ONLY. ACTUAL DRAWINGS WILL BE ISSUED DURING CONSTRUCTION AND MAY VARY AS PER SITE CONDITIONS LIKE SPACE AVAILABILITY, TREES, ADJOINING BUILDING, SERVICE LAYOUT, ETC. 3. ANY DOUBT OR DESCRIPANCY IN THE DRAWING SHALL BE BROUGHT TO THE NOTICE OF THE ARCHITECT IN CHARGE BEFORE EXECUTING THE WORK. 4. THE DRAWING SHALL BE READ IN CONJECTION WITH RELEVANT STRUCTURAL DRAWINGS ALONG WITH RESPECTIVE DRAWINGS AND SPECIFICATIONS.	ARCHITECT (PMDSC) MR. DUNI CHAND DRAWN & DEALT BY MR. HIMANSHU	TEAM LEADER (PMDSC) MR.SUNIL KOUL PROJECT MANAGER (PIU) ER. RAKESH ARORA	CONSULTANT IPE GLOBAL LTD. PROJECT MANAGEMENT CONSULTANT FOR I.D.I.P.T. FOR TOURISM, HIMACHAL PRADESH	ARCHITECT(PMU) AR. SAROJINI SHARMA TECHNICAL CONSULTANT	EXECUTIVE ENGINEER(PMU) ER. R.K. SHRIDHAR PROJECT DIRECTOR MR. MANOJ SHARMA	CLIENT IDIPT-HPTDB PROJECT IDIPT-HP (PROJECT1)	PACKAGE CREATION OF TOURIST CULTURAL CENTRE AT JANJHELI, DISTT. MANDI, (H.P.). PACKAGE NO. 15/2	DRAWING TITLE TYPICAL TRUSS DETAIL (TR-B)	DRAWING NO. HP/CULTURAL CENTRE - JANJHELI /DETAIL/TRUSS TRB/01 DATE :- 09/05/2016 SCALE:- 1:75

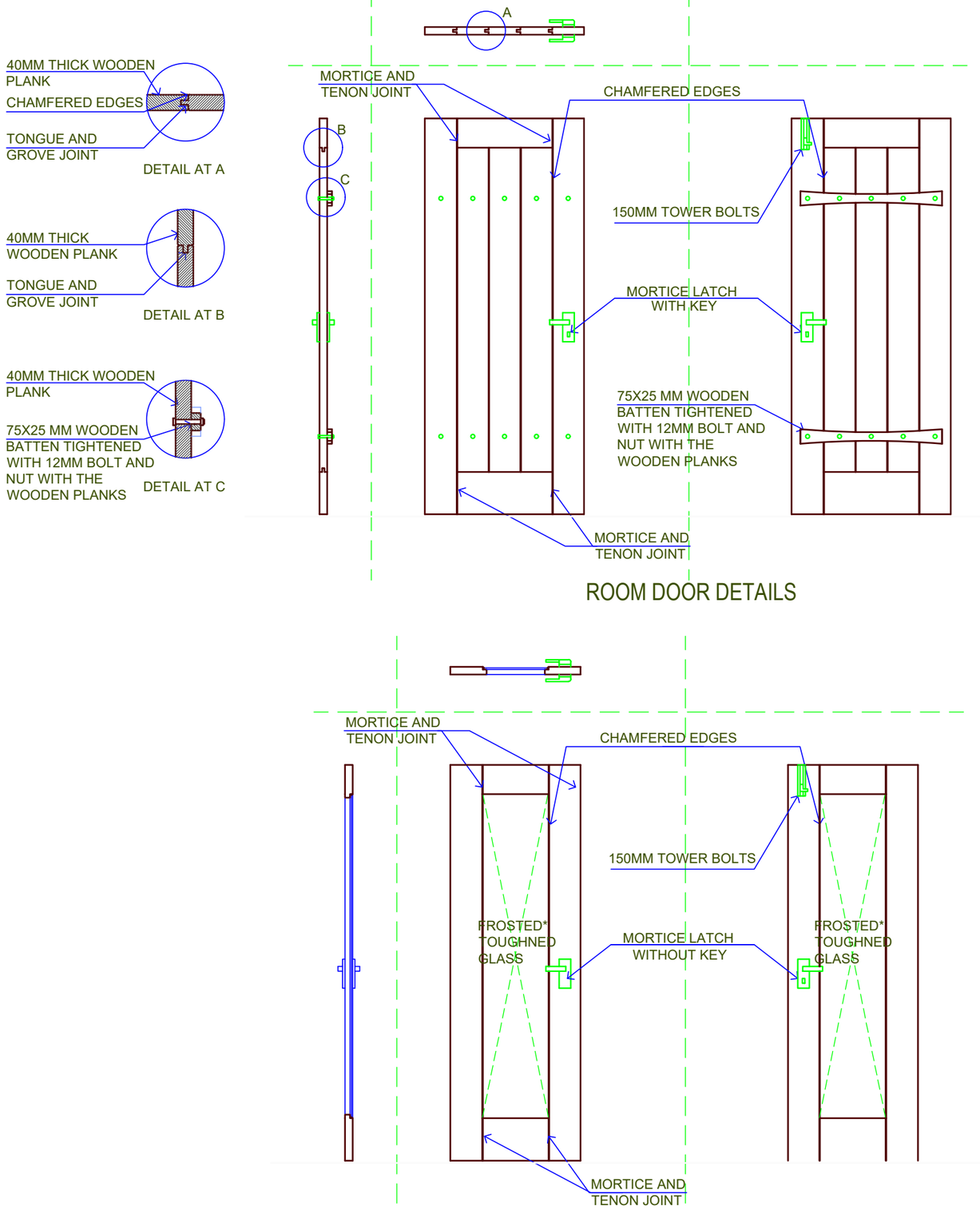

ROOM DOOR DETAILS

TOILET AND BALCONY DOOR DETAILS

*CLEAR GLASS FOR BALCONY DOORS

ORIENTATION	NOTE 1. ALL THE DIMENSIONS ARE IN MM. UNLESS SPECIFIED. 2. THIS DRAWING IS FOR TENDER PURPOSE ONLY. ACTUAL DRAWINGS WILL BE ISSUED DURING CONSTRUCTION AND MAY VARY AS PER SITE CONDITONS LIKE SPACE AVAILABILITY,TREES,ADJOINING BUILDING,SERVICE LAYOUT,ETC.. 3. ANY DOUBT OR DESCRIPANCY IN THE DRAWING SHALL BE BROUGHT TO THE NOTICE OF THE ARCHITECT IN CHARGE BEFORE EXECUTING THE WORK. 4. THE DRAWING SHALL BE READ IN CONJECTION WITH RELEVANT STRUCTURAL DRAWINGS ALONG WITH RESPECTIVE DRAWINGS AND SPECIFICATIONS.	ARCHITECT (PMDSC) MR. DUNI CHAND DRAWN & DEALT BY MR. HIMANSHU	TEAM LEADER (PMDSC) MR.SUNIL KOUL PROJECT MANAGER (PIU) ER. RAKESH ARORA	CONSULTANT IPE GLOBAL LTD. PROJECT MANAGEMENT CONSULTANT FOR I.D.I.P.T. FOR TOURISM, HIMACHAL PRADESH	ARCHITECT(PMU) AR. SAROJINI SHARMA TECHNICAL CONSULTANT	EXECUTIVE ENGINEER(PMU) ER. R.K. SHRIDHAR PROJECT DIRECTOR MR. MANOJ SHARMA	CLIENT IDIPT-HPTDB PROJECT IDIPT-HP (PROJECT1)	PACKAGE CREATION OF TOURIST CULTURAL CENTRE AT JANJHELI, DISTT. MANDI, (H.P.). PACKAGE NO. 15/2	DRAWING TITLE TYPICAL DOOR DETAIL	DRAWING NO. HP/CULTURAL CENTRE - JANJHELI /DETAIL/DOOR/01 DATE :- 12/04/2018 SCALE:- 1:25

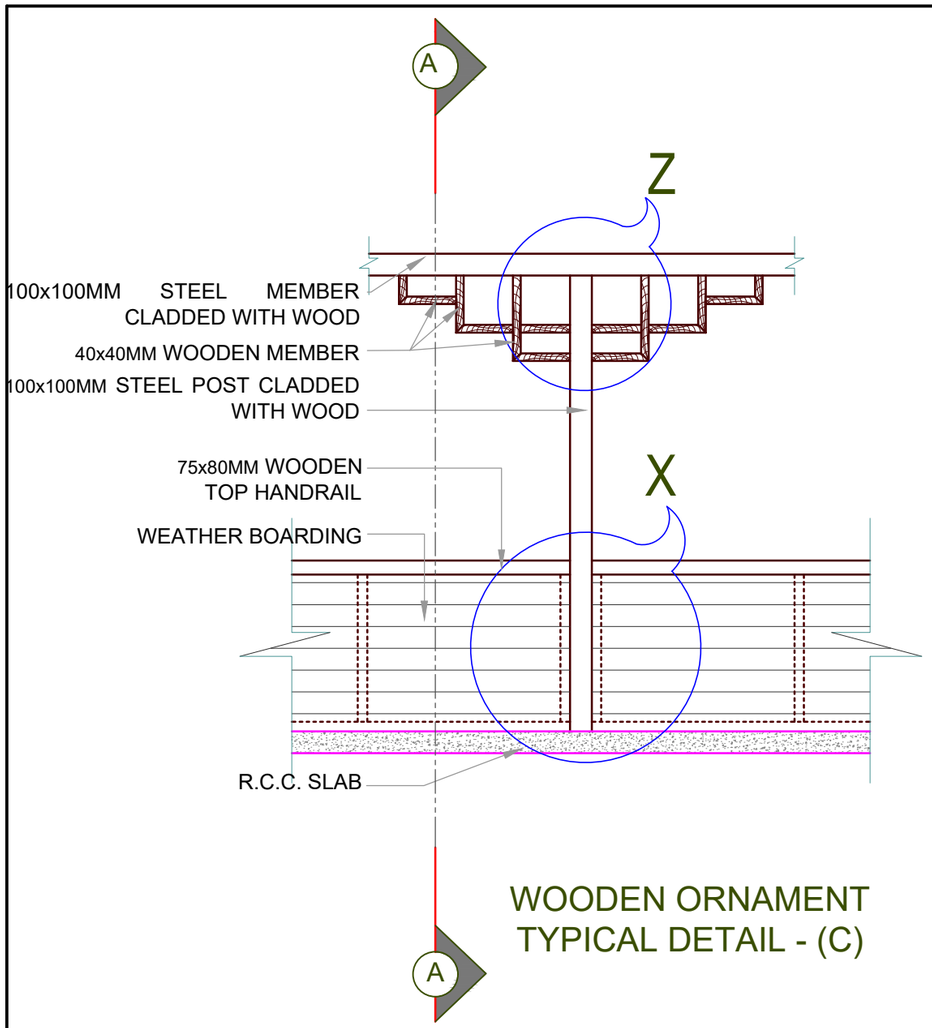

WOODEN ORNAMENT TYPICAL DETAIL - (C)

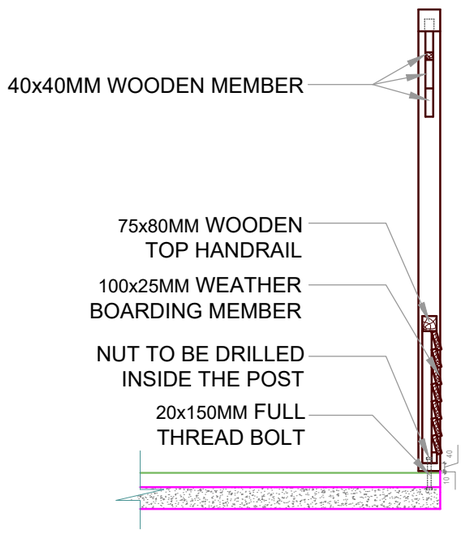

SECTIONAL AT AA TYPICAL DETAIL - (C)

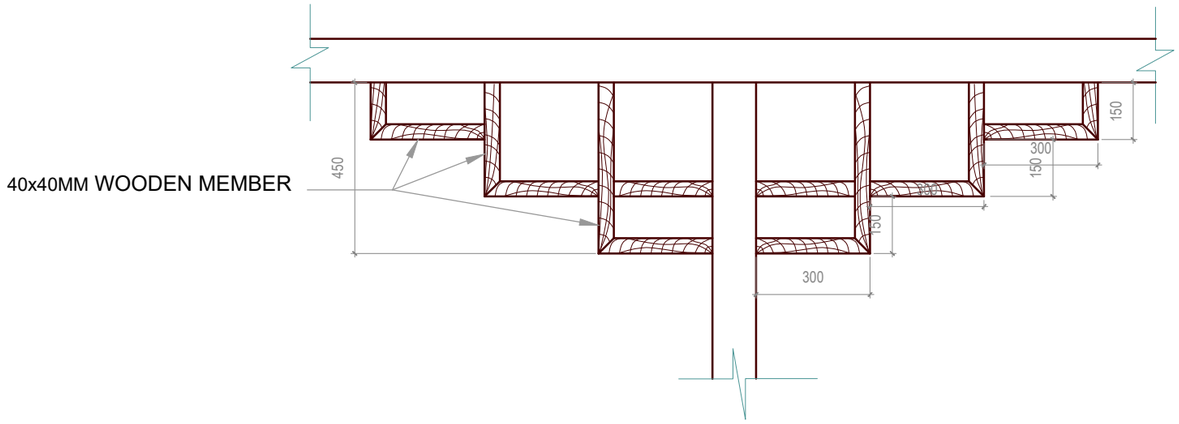

DETAIL AT Z

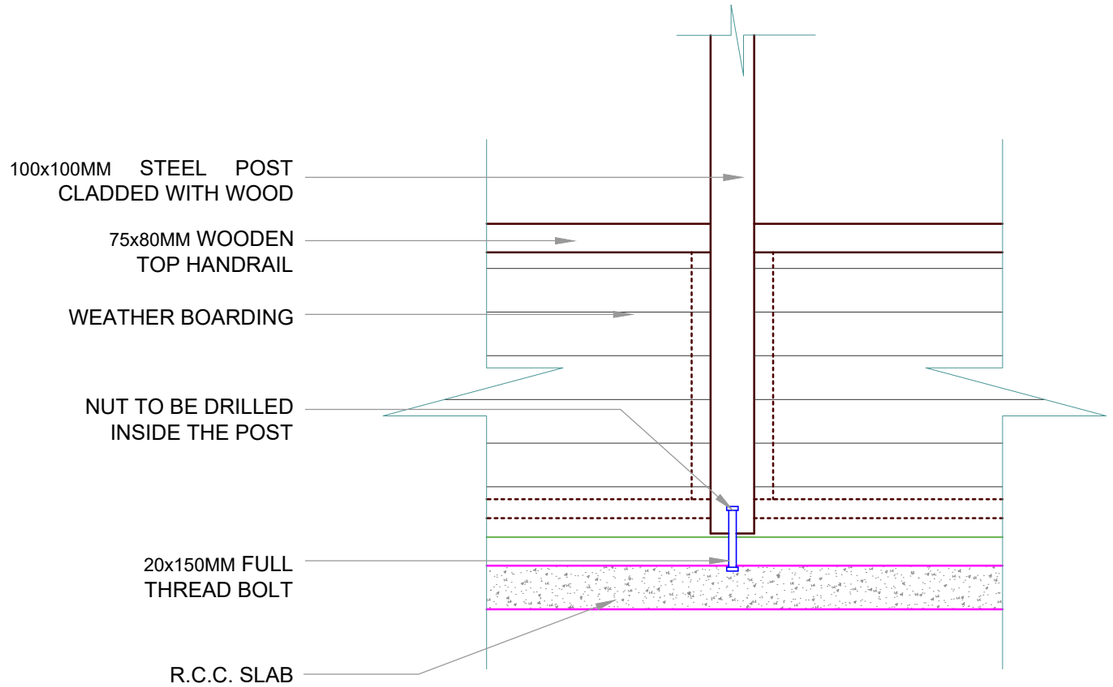

DETAIL AT X

ORIENTATION	NOTE 1. ALL THE DIMENSIONS ARE IN MM. UNLESS SPECIFIED. 2. THIS DRAWING IS FOR TENDER PURPOSE ONLY. ACTUAL DRAWINGS WILL BE ISSUED DURING CONSTRUCTION AND MAY VARY AS PER SITE CONDITONS LIKE SPACE AVAILABILITY, TREES, ADJOINING BUILDING, SERVICE LAYOUT, ETC. 3. ANY DOUBT OR DESCRIPANCY IN THE DRAWING SHALL BE BROUGHT TO THE NOTICE OF THE ARCHITECT IN CHARGE BEFORE EXECUTING THE WORK. 4. THE DRAWING SHALL BE READ IN CONJECTION WITH RELEVANT STRUCTURAL DRAWINGS ALONG WITH RESPECTIVE DRAWINGS AND SPECIFICATIONS.	ARCHITECT (PMDSC) MR. DUNI CHAND DRAWN & DEALT BY MR. HIMANSHU	TEAM LEADER (PMDSC) MR.SUNIL KOUL PROJECT MANAGER (PIU) ER. RAKESH ARORA	CONSULTANT IPE GLOBAL IPE GLOBAL LTD. PROJECT MANAGEMENT CONSULTANT FOR I.D.I.P.T. FOR TOURISM, HIMACHAL PRADESH	ARCHITECT(PMU) AR. SAROJINI SHARMA TECHNICAL CONSULTANT	EXECUTIVE ENGINEER(PMU) ER. R.K. SHRIDHAR PROJECT DIRECTOR MR. MANOJ SHARMA	CLIENT IDIPT-HPTDB PROJECT IDIPT-HP (PROJECT1)	PACKAGE CREATION OF TOURIST CULTURAL CENTRE AT JANJHELI, DISTT. MANDI, (H.P.). PACKAGE NO. 15/2	DRAWING TITLE WOODEN ORNAMENT TYPICAL DETAIL (C)	DRAWING NO. HP/CULTURAL CENTRE - JANJHELI /DETAIL/ORNAMENT/01 DATE :- 12/04/2018 SCALE:- 1:XXX

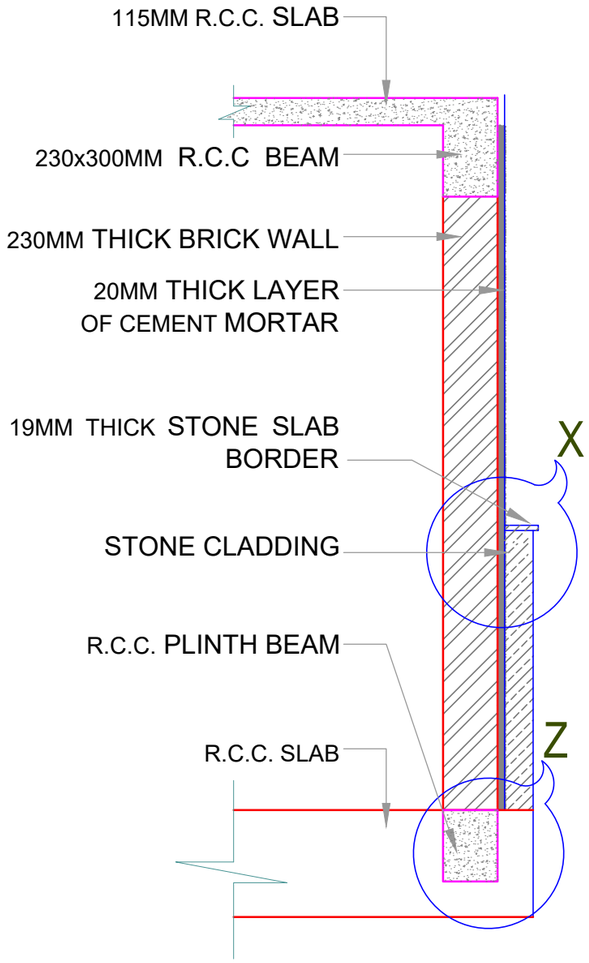

TYPICAL WALL SECTION

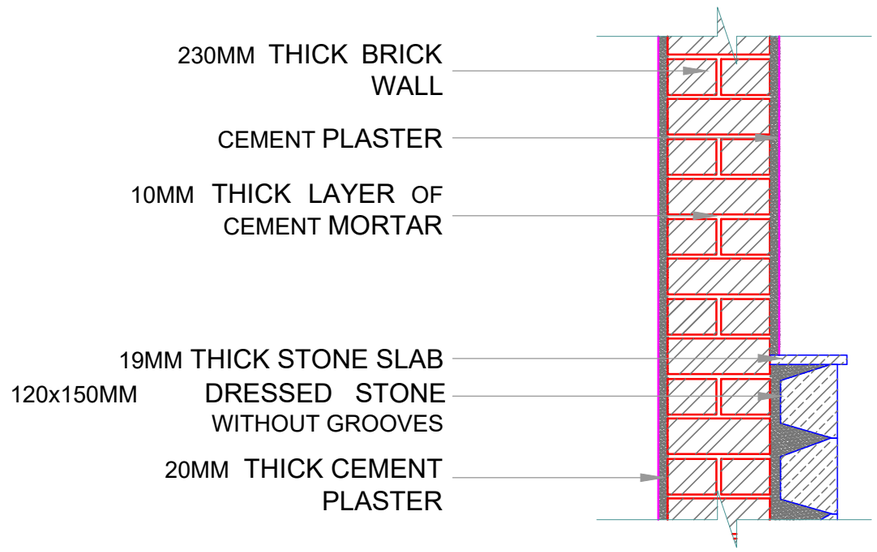

DETAIL AT X

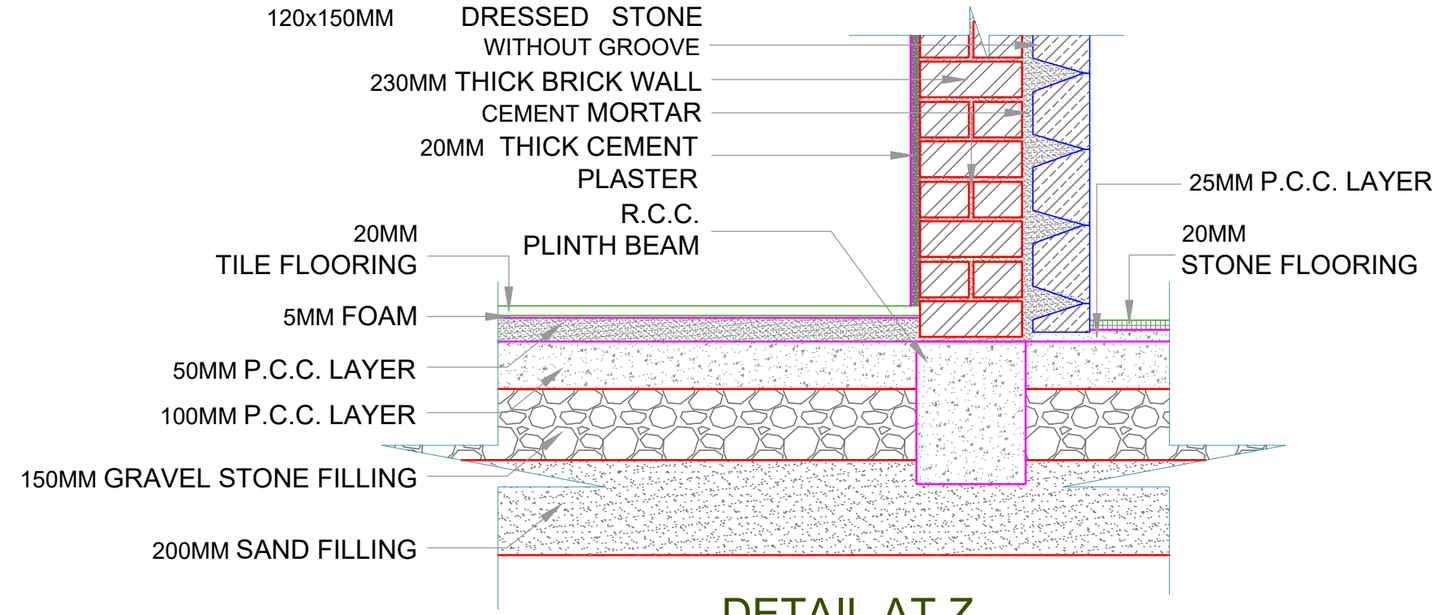

DETAIL AT Z

ORIENTATION	NOTE 1. ALL THE DIMENSIONS ARE IN MM. UNLESS SPECIFIED. 2. THIS DRAWING IS FOR TENDER PURPOSE ONLY. ACTUAL DRAWINGS WILL BE ISSUED DURING CONSTRUCTION AND MAY VARY AS PER SITE CONDITONS LIKE SPACE AVAILABILITY,TREES,ADJOINING BUILDING,SERVICE LAYOUT,ETC. 3. ANY DOUBT OR DESCREPANCY IN THE DRAWING SHALL BE BROUGHT TO THE NOTICE OF THE ARCHITECT IN CHARGE BEFORE EXECUTING THE WORK. 4. THE DRAWING SHALL BE READ IN CONJECTION WITH RELEVANT STRUCTURAL DRAWINGS ALONG WITH RESPECTIVE DRAWINGS AND SPECIFICATIONS.	ARCHITECT (PMDSC) MR. DUNI CHAND DRAWN & DEALT BY MR. HIMANSHU	TEAM LEADER (PMDSC) MR.SUNIL KOUL PROJECT MANAGER (PIU) ER. RAKESH ARORA	CONSULTANT IPE GLOBAL LTD. PROJECT MANAGEMENT CONSULTANT FOR I.D.I.P.T. FOR TOURISM, HIMACHAL PRADESH	ARCHITECT(PMU) AR. SAROJINI SHARMA TECHNICAL CONSULTANT	EXECUTIVE ENGINEER(PMU) ER. R.K. SHRIDHAR PROJECT DIRECTOR MR. MANOJ SHARMA	CLIENT IDIPT-HPTDB PROJECT IDIPT-HP (PROJECT1)	PACKAGE CREATION OF TOURIST CULTURAL CENTRE AT JANJHELI, DISTT. MANDI, (H.P.). PACKAGE NO. 15/2	DRAWING TITLE TYPICAL WALL CLADDING DETAIL (E)	DRAWING NO. HP/CULTURAL CENTRE - JANJHELI /DETAIL/CLADDING/01 DATE :- 12/04/2018 SCALE:- 1:XXX

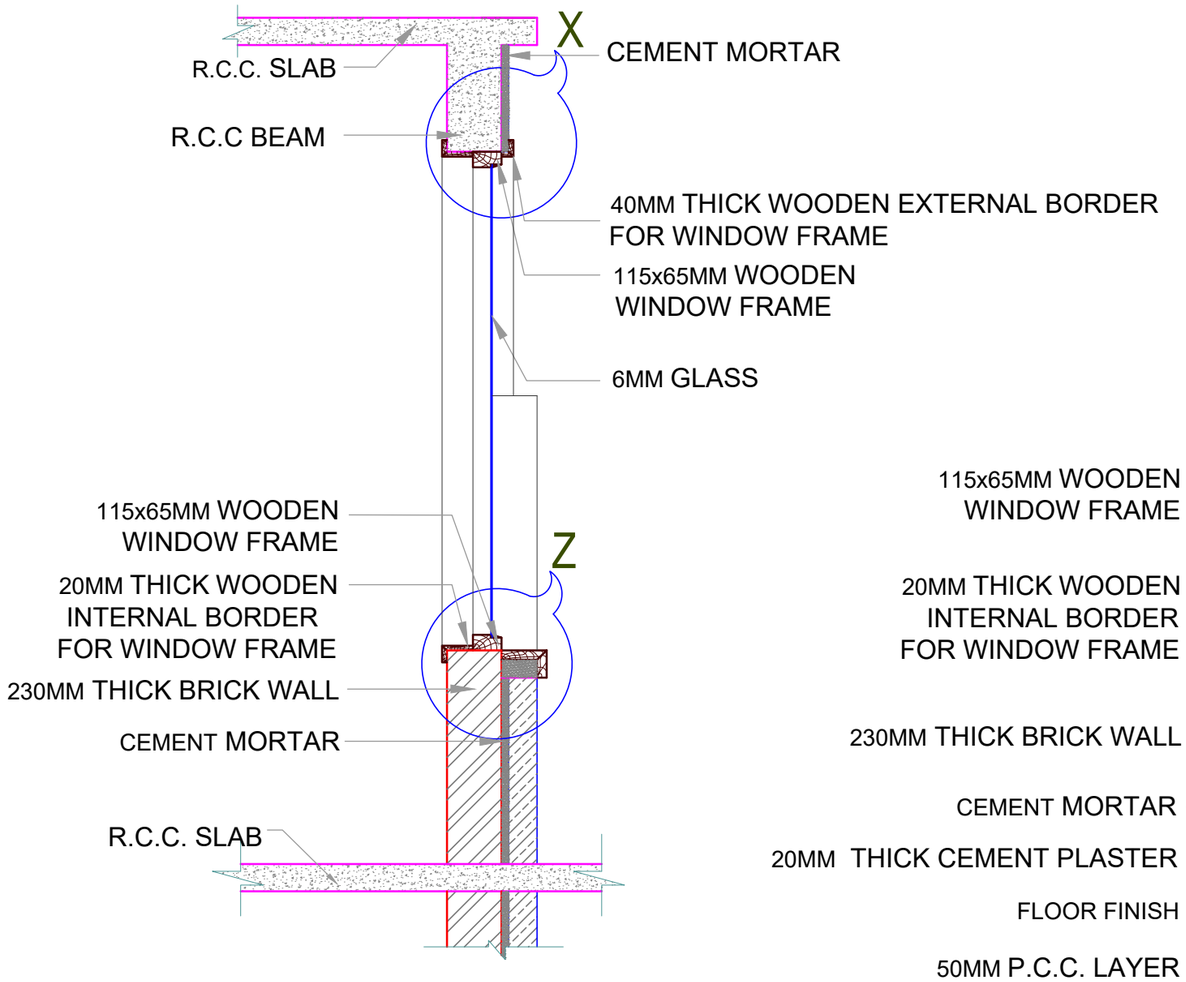

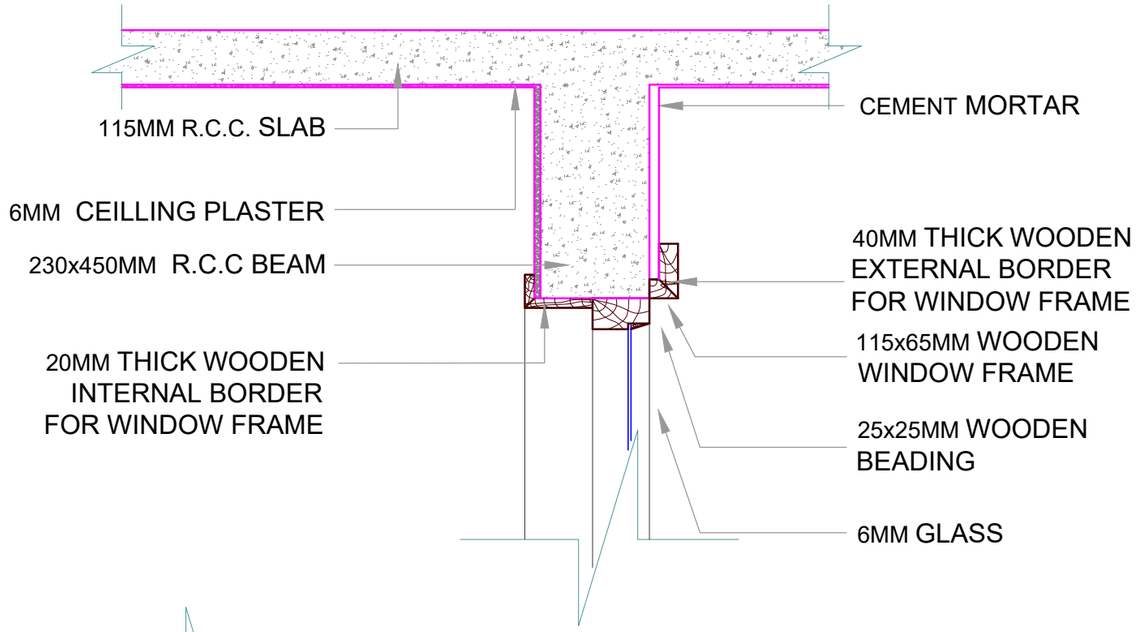

DETAIL AT X

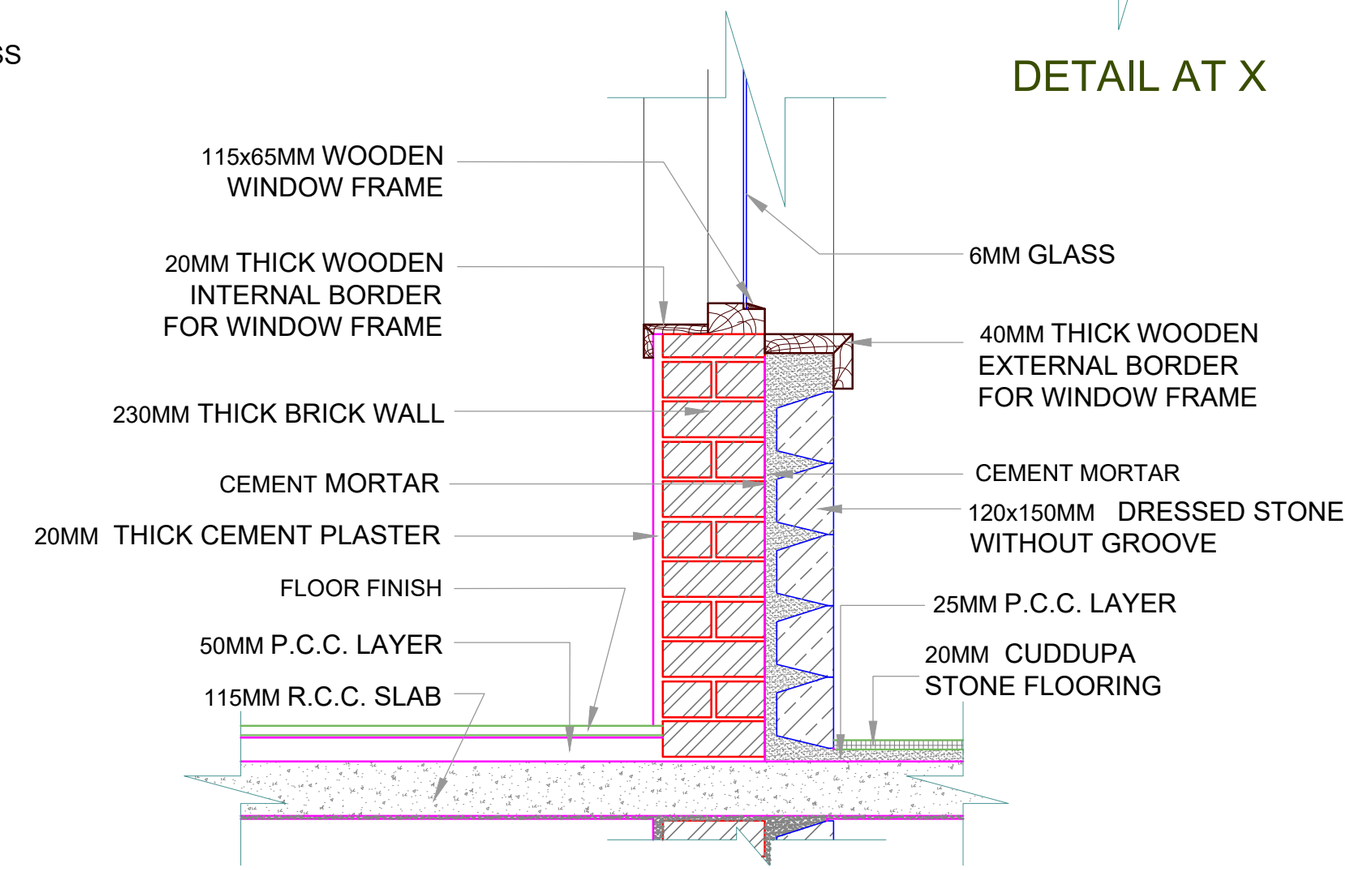

DETAIL AT Z

ORIENTATION	NOTE 1. ALL THE DIMENSIONS ARE IN MM, UNLESS SPECIFIED. 2. THIS DRAWING IS FOR TENDER PURPOSE ONLY. ACTUAL DRAWINGS WILL BE ISSUED DURING CONSTRUCTION AND MAY VARY AS PER SITE CONDITONS LIKE SPACE AVAILABILITY,TREES,ADJOINING BUILDING,SERVICE LAYOUT,ETC. 3. ANY DOUBT OR DESCRIPANCY IN THE DRAWING SHALL BE BROUGHT TO THE NOTICE OF THE ARCHITECT IN CHARGE BEFORE EXECUTING THE WORK. 4. THE DRAWING SHALL BE READ IN CONJECTION WITH RELEVANT STRUCTURAL DRAWINGS ALONG WITH RESPECTIVE DRAWINGS AND SPECIFICATIONS.	ARCHITECT (PMDSC) MR. DUNI CHAND DRAWN & DEALT BY MR. HIMANSHU	TEAM LEADER (PMDSC) MR.SUNIL KOUL PROJECT MANAGER (PIU) ER. RAKESH ARORA	CONSULTANT IPE GLOBAL LTD. PROJECT MANAGEMENT CONSULTANT FOR I.D.I.P.T. FOR TOURISM, HIMACHAL PRADESH	ARCHITECT(PMU) AR. SAROJINI SHARMA TECHNICAL CONSULTANT	EXECUTIVE ENGINEER(PMU) ER. R.K. SHRIDHAR PROJECT DIRECTOR MR. MANOJ SHARMA	CLIENT IDIPT-HPTDB PROJECT IDIPT-HP (PROJECT1)	PACKAGE CREATION OF TOURIST CULTURAL CENTRE AT JANJHELI, DISTT. MANDI, (H.P.). PACKAGE NO. 15/2	DRAWING TITLE TYPICAL WALL CLADDING AT WINDOWS DETAIL (E)	DRAWING NO. HP/CULTURAL CENTRE - JANJHELI /DETAIL/CLADDING/02 DATE :- 12/04/2018 SCALE:- 1:XXX

FRONT ELEVATION

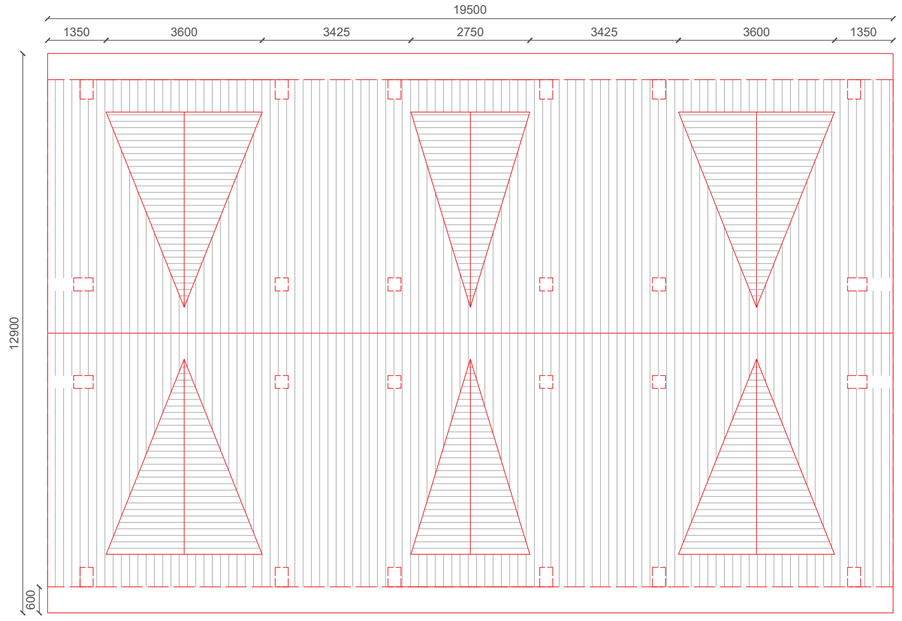

ROOF PLAN

DOOR AND WINDOW SCHEDULE (GROUND FLOOR)						
S.NO.	Name	Dimensions			Specifications	Qty.
		Width	Height	Sill		
1	D.W.	2880	2550	0/750	Wooden Door	1 Nos.
2	D.W.1	1800	2400	0/750	Wooden Door	2 Nos.
3	D1	900	2100	0	Wooden Door	4 Nos.
4	D2	1200	2100	0	Wooden Door	1 Nos.
5	D3	1200	2100	0	Wooden Door (Both Way)	1 Nos.
6	D4	750	2100	0	Wooden Door	4 Nos.
7	D5	750	2100	0	FRP DOOR	2 Nos.
8	W	2000	1350	750	Wooden Window	1 Nos.
9	W1	1000	1800	750	Wooden Window	4 Nos.
10	W2	2000	850	150	Wooden Window	1 Nos.
11	V1	1000	600	1950	Wooden Window	2 Nos.
12	V	1000	1050	1500	Wooden Window	2 Nos.
13	W3	3740	1800	750	Aluminium Window	4 Nos.
13	W4	1840	1500	1200	Aluminium Window	2 Nos.

DOOR AND WINDOW SCHEDULE (FIRST FLOOR)						
S.NO.	Name	Dimensions			Specifications	Qty.
		Width	Height	Sill		
1	D.W.1	1800	2400	0/750	Wooden Door	1 Nos.
2	D1	900	2100	0	Wooden Door	8 Nos.
3	D4	750	2100	0	Wooden Door	4 Nos.
4	W	2000	1350	750	Wooden Window	5 Nos.
5	W1	1000	1800	750	Wooden Window	2 Nos.
6	W2	2000	850	150	Wooden Window	1 Nos.
7	V	1000	1050	1500	Wooden Window	4 Nos.

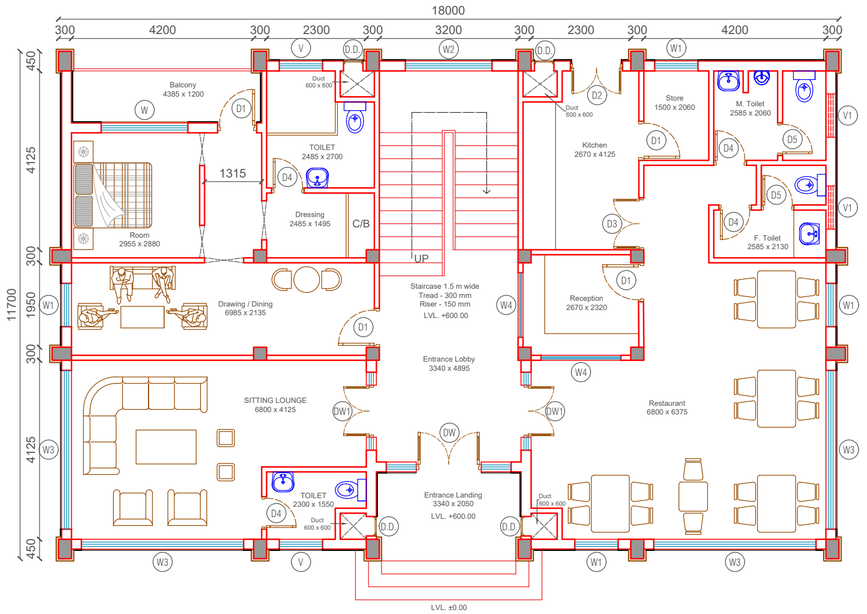

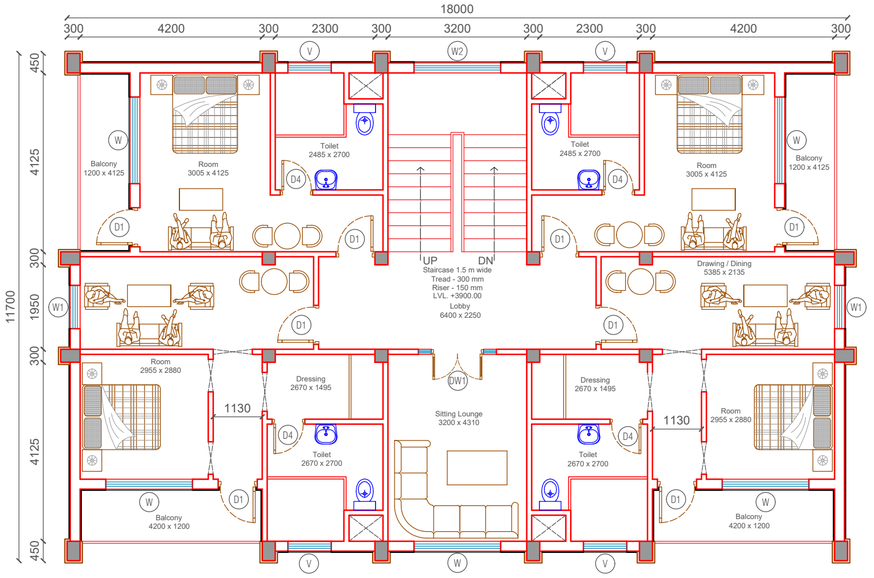

ORIENTATION	**NOTE** 1. ALL THE DIMENSIONS ARE IN M. UNLESS SPECIFIED. 2. THIS DRAWING IS FOR ARCHITECTURAL PURPOSE ONLY. 3. ANY DOUBT OR DESCRIPANCY IN THE DRAWING SHALL BE BROUGHT TO THE NOTICE OF THE ARCHITECT IN CHARGE BEFORE EXECUTING THE WORK. 4. THE DRAWING SHALL BE READ IN CONJECTION WITH RELEVANT STRUCTURAL DRAWINGS ALONG WITH RESPECTIVE DRAWINGS AND SPECIFICATIONS. 5. THE DRAWING IS FOR TENDER PURPOSE, ACTUAL DRAWINGAS WILL BE ISSUED DURING CONSTRUCTION AND MAY VARY AS PER SITE CONDITONS LIKE SPACE AVAILABILITY,TREES,ADJOINING BUILDING,SERVICE LAYOUT,ETC.	**ARCHITECT (PMDSC)** MR. DUNI CHAND **DRAWN & DEALT BY** AR. MOHIT GUPTA	**TEAM LEADER (PMDSC)** MR.SUNIL KOUL **PROJECT MANAGER (PIU)** ER. RAKESH ARORA	**CONSULTANT** IPE GLOBAL **IPE GLOBAL LTD.** PROJECT MANAGEMENT CONSULTANT FOR I.D.J.P.T. FOR TOURISM, HIMACHAL PRADESH	**ARCHITECT(PMU)** AR. SAROJINI SHARMA **TECHNICAL CONSULTANT**	**EXECUTIVE ENGINEER(PMU)** ER. R.K. SHRIDHAR **PROJECT DIRECTOR** MR. MANOJ SHARMA	**CLIENT** IDIPT-HPTDB **PROJECT** IDIPT-HP (PROJECT1)	**PACKAGE** DPR 15.2 CREATION OF TOURIST CULTURAL CENTRE AT JANJHELI	**DRAWING TITLE** **CONSTRUCTION DRAWING** TREKKERS HOSTEL - BLOCK 1	**DRAWING NO.** HP/CULTURAL CENTRE - JANJHELI /TREKKER - BLOCK 1/ 01 **DATE :-** 13/04/2018 **SCALE:-** 1:100

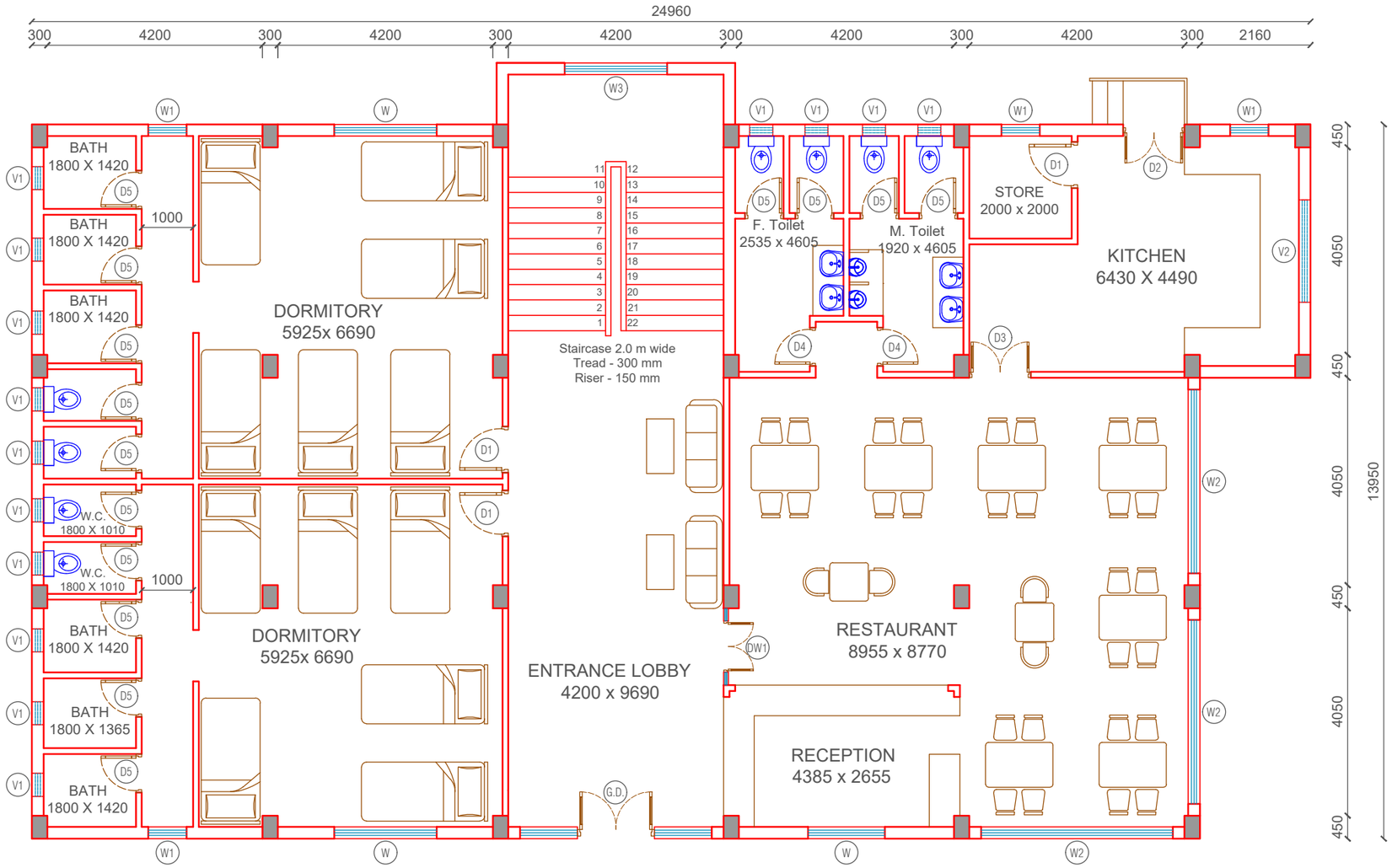

ORIENTATION	**NOTE** 1. ALL THE DIMENSIONS ARE IN MM. UNLESS SPECIFIED. 2. THIS DRAWING IS FOR TENDER PURPOSE ONLY. ACTUAL DRAWINGS WILL BE ISSUED DURING CONSTRUCTION AND MAY VARY AS PER SITE CONDITONS LIKE SPACE AVAILABILITY,TREES,ADJOINING BUILDING,SERVICE LAYOUT,ETC. 3. ANY DOUBT OR DESCRIPANCY IN THE DRAWING SHALL BE BROUGHT TO THE NOTICE OF THE ARCHITECT IN CHARGE BEFORE EXECUTING THE WORK. 4. THE DRAWING SHALL BE READ IN CONJECTION WITH RELEVANT STRUCTURAL DRAWINGS ALONG WITH RESPECTIVE DRAWINGS AND SPECIFICATIONS.	**ARCHITECT (PMDSC)** MR. DUNI CHAND **DRAWN & DEALT BY** AR. MOHIT GUPTA	**TEAM LEADER (PMDSC)** MR.SUNIL KOUL **PROJECT MANAGER (PIU)** ER. RAKESH ARORA	**CONSULTANT** IPE GLOBAL **IPE GLOBAL LTD.** PROJECT MANAGEMENT CONSULTANT FOR I.D.I.P.T. FOR TOURISM, HIMACHAL PRADESH	**ARCHITECT(PMU)** AR. SAROJINI SHARMA **TECHNICAL CONSULTANT**	**EXECUTIVE ENGINEER(PMU)** ER. R.K. SHRIDHAR **PROJECT DIRECTOR** MR. MANOJ SHARMA	**CLIENT** IDIPT-HPTDB **PROJECT** IDIPT-HP (PROJECT1)	**PACKAGE** CREATION OF TOURIST CULTURAL CENTRE AT JANJHELI, DISTT. MANDI, (H.P.). PACKAGE NO. 15/2	**DRAWING TITLE** TREKKER HOSTEL - BLOCK 2 GROUND FLOOR PLAN	**DRAWING NO.** HP/CULTURAL CENTRE - JANJHELI /TREKKER - BLOCK 2/ 01 **DATE :-** 13/04/2018 **SCALE:- 1:100**

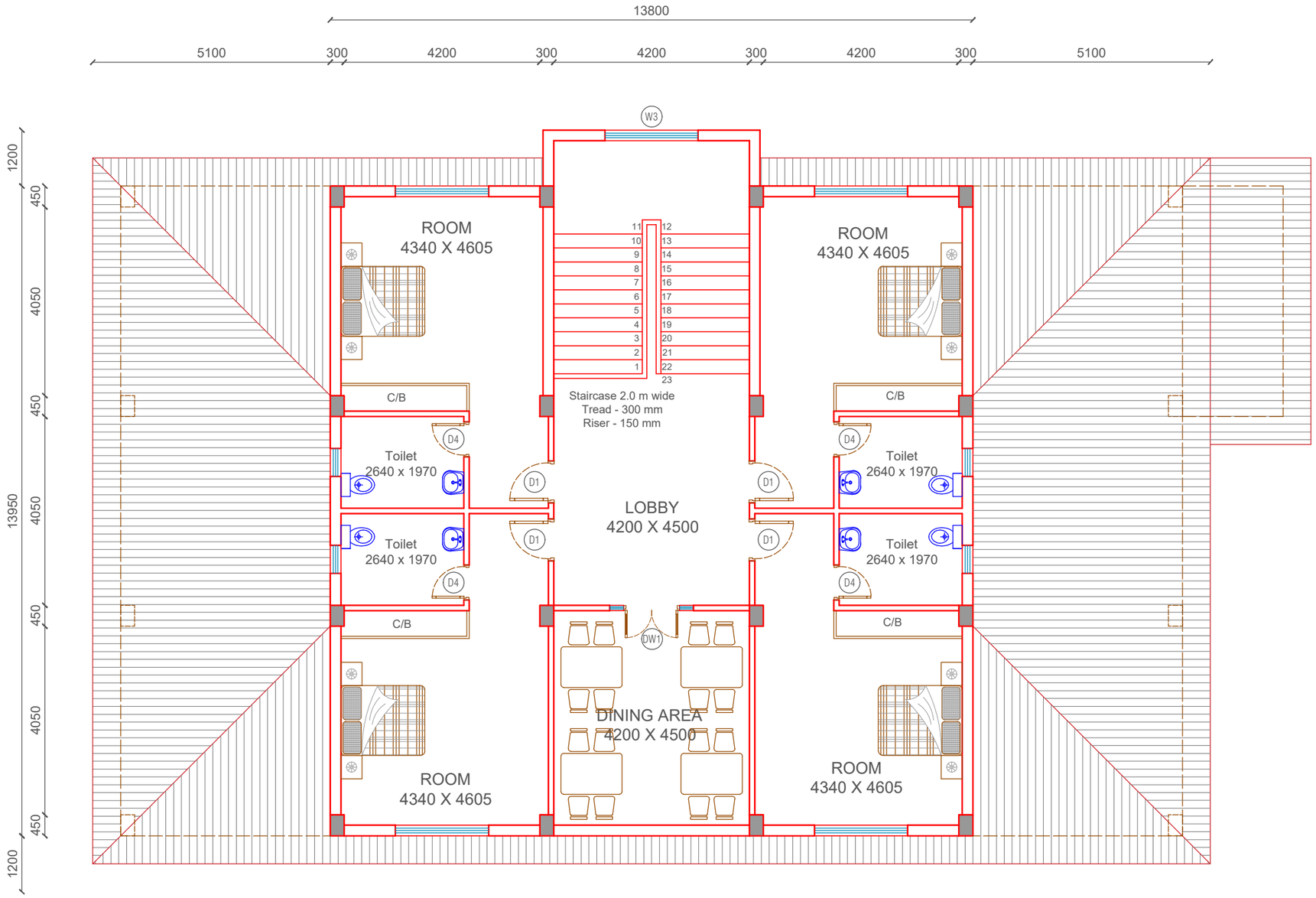

ORIENTATION	**NOTE** 1. ALL THE DIMENSIONS ARE IN MM. UNLESS SPECIFIED. 2. THIS DRAWING IS FOR TENDER PURPOSE ONLY. ACTUAL DRAWINGS WILL BE ISSUED DURING CONSTRUCTION AND MAY VARY AS PER SITE CONDITONS LIKE SPACE AVAILABILITY,TREES,ADJOINING BUILDING,SERVICE LAYOUT,ETC. 3. ANY DOUBT OR DESCRIPANCY IN THE DRAWING SHALL BE BROUGHT TO THE NOTICE OF THE ARCHITECT IN CHARGE BEFORE EXECUTING THE WORK. 4. THE DRAWING SHALL BE READ IN CONJECTION WITH RELEVANT STRUCTURAL DRAWINGS ALONG WITH RESPECTIVE DRAWINGS AND SPECIFICATIONS.	**ARCHITECT (PMDSC)** MR. DUNI CHAND **DRAWN & DEALT BY** AR. MOHIT GUPTA	**TEAM LEADER (PMDSC)** MR.SUNIL KOUL **PROJECT MANAGER (PIU)** ER. RAKESH ARORA	**CONSULTANT** IPE GLOBAL **IPE GLOBAL LTD.** PROJECT MANAGEMENT CONSULTANT FOR I.D.I.P.T. FOR TOURISM, HIMACHAL PRADESH	**ARCHITECT(PMU)** AR. SAROJINI SHARMA **TECHNICAL CONSULTANT**	**EXECUTIVE ENGINEER(PMU)** ER. R.K. SHRIDHAR **PROJECT DIRECTOR** MR. MANOJ SHARMA	**CLIENT** IDIPT-HPTDB **PROJECT** IDIPT-HP (PROJECT1)	**PACKAGE** CREATION OF TOURIST CULTURAL CENTRE AT JANJHELI, DISTT. MANDI, (H.P.). PACKAGE NO. 15/2	**DRAWING TITLE** TREKKER HOSTEL - BLOCK 2 FIRST FLOOR PLAN	**DRAWING NO.** HP/CULTURAL CENTRE - JANJHELI /TREKKER - BLOCK 2/ 02 **DATE :-** 13/04/2018 **SCALE:-** 1:100

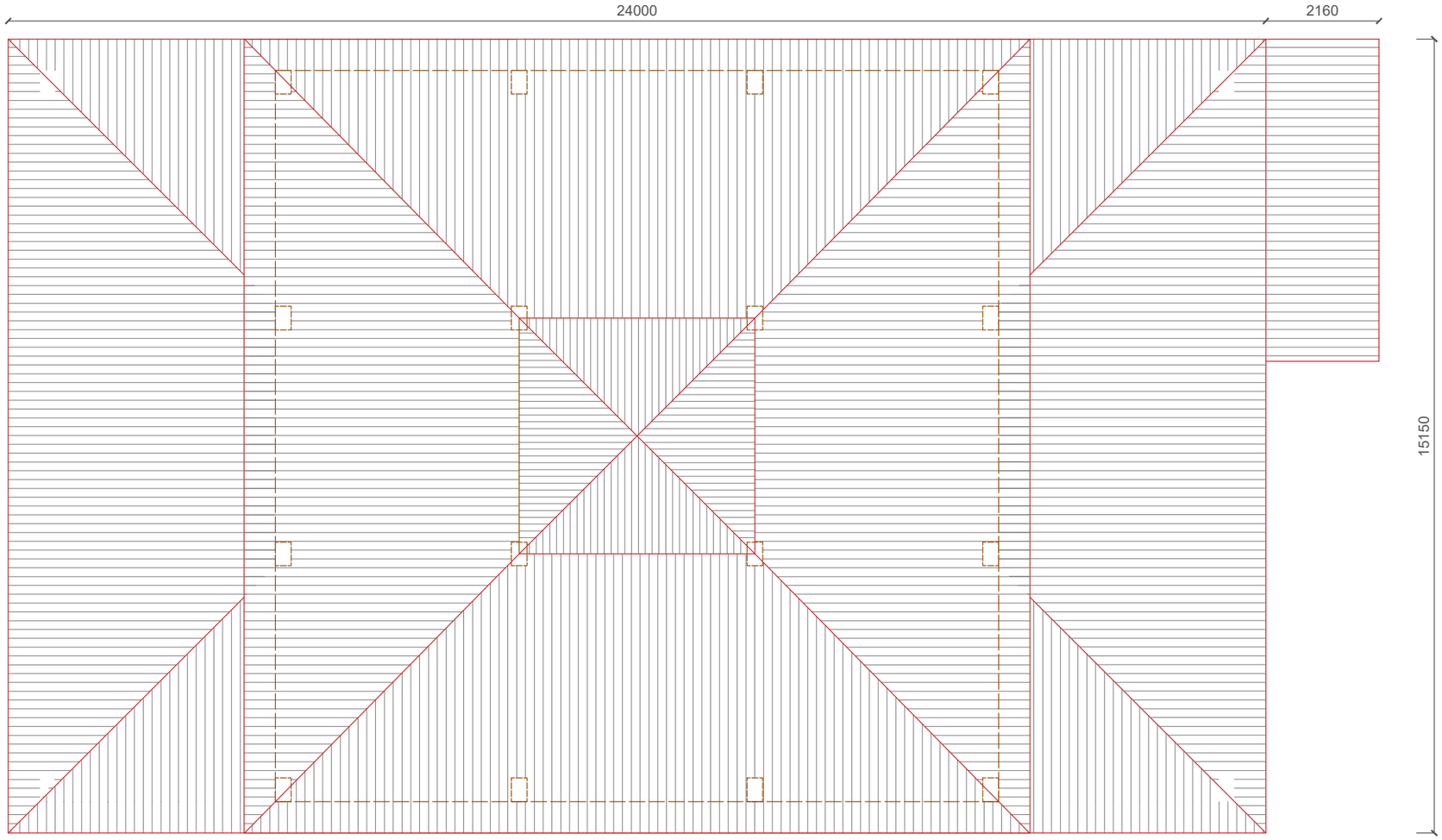

ORIENTATION	**NOTE** 1. ALL THE DIMENSIONS ARE IN MM, UNLESS SPECIFIED. 2. THIS DRAWING IS FOR TENDER PURPOSE ONLY. ACTUAL DRAWINGS WILL BE ISSUED DURING CONSTRUCTION AND MAY VARY AS PER SITE CONDITONS LIKE SPACE AVAILABILITY,TREES,ADJOINING BUILDING,SERVICE LAYOUT,ETC. 3. ANY DOUBT OR DESCREPANCY IN THE DRAWING SHALL BE BROUGHT TO THE NOTICE OF THE ARCHITECT IN CHARGE BEFORE EXECUTING THE WORK. 4. THE DRAWING SHALL BE READ IN CONJUCTION WITH RELEVANT STRUCTURAL DRAWINGS ALONG WITH RESPECTIVE DRAWINGS AND SPECIFICATIONS.	**ARCHITECT (PMDSC)** MR. DUNI CHAND **DRAWN & DEALT BY** AR. MOHIT GUPTA	**TEAM LEADER (PMDSC)** MR.SUNIL KOUL **PROJECT MANAGER (PIU)** ER. RAKESH ARORA	**CONSULTANT** IPE GLOBAL **IPE GLOBAL LTD.** PROJECT MANAGEMENT CONSULTANT FOR I.D.I.P.T. FOR TOURISM, HIMACHAL PRADESH	**ARCHITECT(PMU)** AR. SAROJINI SHARMA **TECHNICAL CONSULTANT**	**EXECUTIVE ENGINEER(PMU)** ER. R.K. SHRIDHAR **PROJECT DIRECTOR** MR. MANOJ SHARMA	**CLIENT** IDIPT-HPTDB **PROJECT** IDIPT-HP (PROJECT1)	**PACKAGE** CREATION OF TOURIST CULTURAL CENTRE AT JANJHELI, DISTT. MANDI, (H.P.). PACKAGE NO. 15/2	**DRAWING TITLE** TREKKER HOSTEL - BLOCK 2 ROOF PLAN	**DRAWING NO.** HP/CULTURAL CENTRE - JANJHELI /TREKKER - BLOCK 2/ 03 **DATE :-** 13/04/2018 **SCALE:- 1:100**

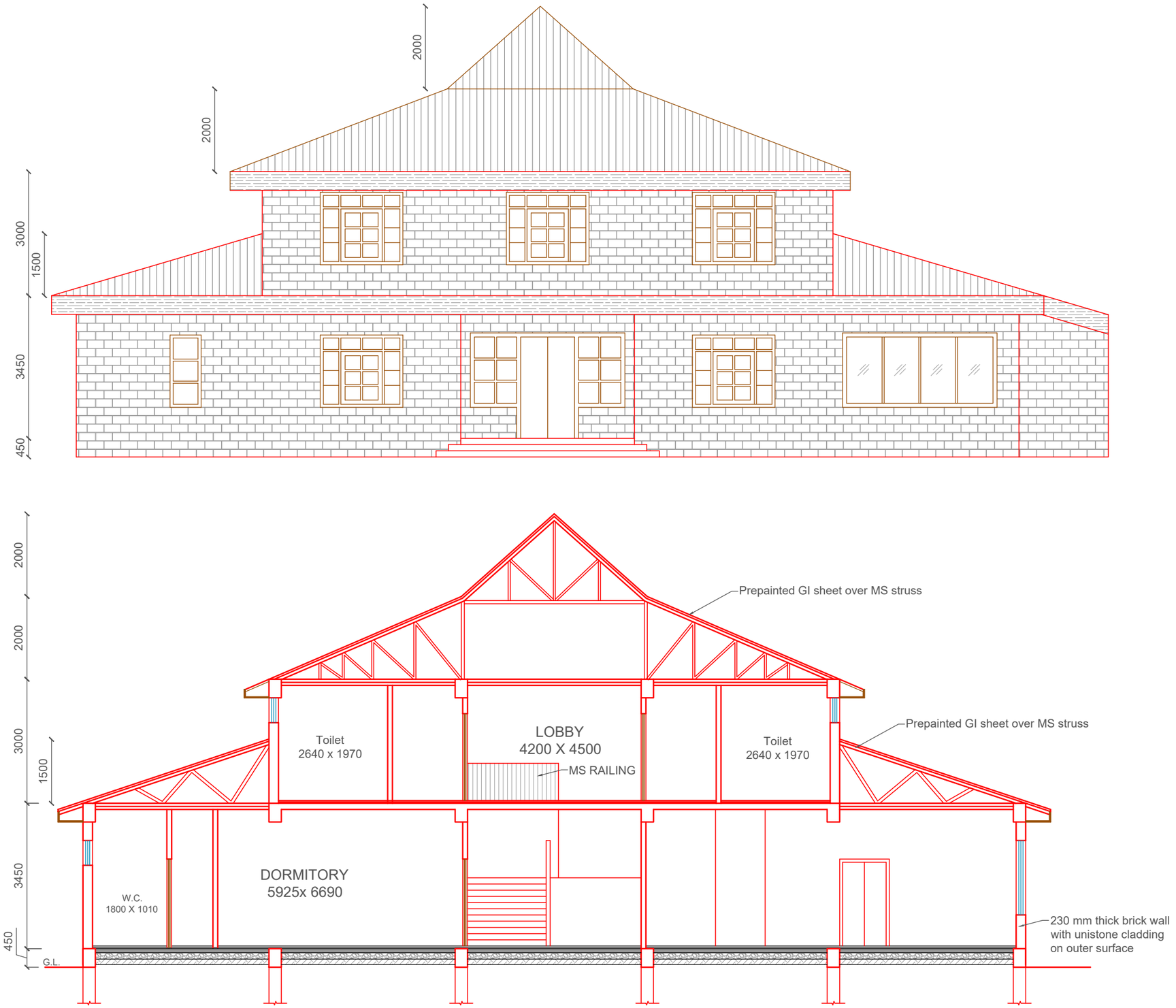

ORIENTATION	**NOTE** 1. ALL THE DIMENSIONS ARE IN MM. UNLESS SPECIFIED.. 2. THIS DRAWING IS FOR TENDER PURPOSE ONLY. ACTUAL DRAWINGS WILL BE ISSUED DURING CONSTRUCTION AND MAY VARY AS PER SITE CONDITONS LIKE SPACE AVAILABILITY,TREES,ADJOINING BUILDING,SERVICE LAYOUT,ETC. 3. ANY DOUBT OR DESCRIPANCY IN THE DRAWING SHALL BE BROUGHT TO THE NOTICE OF THE ARCHITECT IN CHARGE BEFORE EXECUTING THE WORK. 4. THE DRAWING SHALL BE READ IN CONJECTION WITH RELEVANT STRUCTURAL DRAWINGS ALONG WITH RESPECTIVE DRAWINGS AND SPECIFICATIONS.	**ARCHITECT (PMDSC)** MR. DUNI CHAND **DRAWN & DEALT BY** AR. MOHIT GUPTA	**TEAM LEADER (PMDSC)** MR.SUNIL KOUL **PROJECT MANAGER (PIU)** ER. RAKESH ARORA	**CONSULTANT** IPE GLOBAL **IPE GLOBAL LTD.** PROJECT MANAGEMENT CONSULTANT FOR I.D.J.P.T. FOR TOURISM, HIMACHAL PRADESH	**ARCHITECT(PMU)** AR. SAROJINI SHARMA **TECHNICAL CONSULTANT**	**EXECUTIVE ENGINEER(PMU)** ER. R.K. SHRIDHAR **PROJECT DIRECTOR** MR. MANOJ SHARMA	**CLIENT** IDIPT-HPTDB **PROJECT** IDIPT-HP (PROJECT1)	**PACKAGE** CREATION OF TOURIST CULTURAL CENTRE AT JANJHELI, DISTT. MANDI, (H.P.). PACKAGE NO. 15/2	**DRAWING TITLE** TREKKER HOSTEL - BLOCK 2 ELEVATION AND SECTION	**DRAWING NO.** HP/CULTURAL CENTRE - JANJHELI /TREKKER - BLOCK 2/ 04 **DATE :-** 13/04/2018 **SCALE:- 1:100**

Appendix 6.1

IEE / EMP

Blank Page

VIII. ENVIRONMENTAL MANAGEMENT PLAN
(ABSTRACT OF IEE CREATION OF TOURIST CULTURAL CENTER JANJEHLI)

4. The purpose of the environmental management plan (EMP) is to ensure that the activities are undertaken in a responsible, non-detrimental manner with the objectives of: (i) providing a proactive, feasible, and practical working tool to enable the measurement and monitoring of environmental performance on-site; (ii) guiding and controlling the implementation of findings and recommendations of the environmental assessment conducted for the project; (iii) detailing specific actions deemed necessary to assist in mitigating the environmental impact of the project; and (iv) ensuring that safety recommendations are complied with (Table 8).
F

5. A copy of the EMP must be kept on work sites at all times. This EMP will be included in the bid documents and will be further reviewed and updated during implementation. The EMP will be made binding on all contractors operating on the site and will be included in the contractual clauses. Non-compliance with, or any deviation from, the conditions set out in this document constitutes a failure in compliance.

6. The contractor will be required to (i) establish an operational system for managing environmental impacts (ii) carry out all of the monitoring and mitigation measures set forth in the EMP; and (iii) implement any corrective or preventative actions set out in safeguards monitoring reports that PMU and PIU will prepare from time to time to monitor implementation of this IEE and EMP. The contractor shall allocate a budget for compliance with these EMP measures, requirements and actions.

A. Responsibilities for EMP Implementation

7. The following agencies will be responsible for EMP Implementation:

- The Department of Tourism and Civil Aviation (DoTCA), Government of Himachal Pradesh, is the Executing Agency.
- The implementing agency is the Himachal Pradesh Tourism Development Board (HPTDB).
- The Project Management Unit (PMU) has been established in Shimla for the overall project management and
- Project Implementation Unit (PIU) has been established in Shimla.
- Environmental Specialist has been deputed by the PMU, who will be responsible for implementation of the environmental safeguard provisions. The Project Management Consultants (PMC) and Design and Supervision Consultant (DSC, Kullu) have been recruited to provide assistance to the PMU/PIUs in project implementation.
- Within the PMC team, an Environmental Specialist provides overall direction for management of environmental issues, and provides technical support to the PMU including implementation of the environmental safeguards according to ADB requirements, and assist in monitoring impacts and mitigation measures associated with subprojects.
- The Environmental Specialist of the DSC team is responsible for preparation of the Environmental assessment documents in line with the EARF and supervises the implementation of the EMP provisions in the subprojects. The DSC Safeguards specialist supports environmental management functions including updating IEEs with respect to sub-project Environmental Management Plans, and assist in monitoring impacts and mitigation measures associated with subprojects. He/she will be required to include mitigation measures in designs where appropriate, and to

specify other measures in construction contracts. Contractors will be required by their contracts to implement all specified mitigation, monitoring, and reporting assigned to contractors as presented in the EMP.

- The PMU, oversees the implementation of the environmental provisions related to subproject implementation, its responsibilities include preparation and updation of IEEs consistent with the ADBs Safeguards Policy Statement and the environmental compliance requirements of the Government of Himachal Pradesh and the Government of India. Environmental monitoring will be undertaken by the PMU supported by the DSC - Safeguards Specialist.
- The project includes upfront and on-going supervision and training assistance for environmental monitoring reporting in project management structures. The effective implementation of the measures proposed will be ensured through the building up of capacity towards environmental management within the PMU supplemented with the technical expertise of a Safeguards Specialist as part of the PMC/DSC.

8. The contractor's conformity with contract procedures and specifications during construction will be carefully monitored by the PIU. Safeguard Specialists are deputed in PMU, PMC and DSC, who will monitor the environmental performance of contractors. Terms of References of Safeguards Specialists are given in boxes below-

Box 1: Terms of Reference of Safeguards Specialist – PMU
• Review the IEE document and ensure adequacy under Safeguard Policy Statement, 2009 and identify any areas for improvement. • Ensure that the project design and specification adequately reflect the IEE, co-ordinate the obtaining of requisite environmental clearances for the project • Monitor construction activities to ensure that identified and appropriate control measures are effective and in compliance with the IEE and advise PIU for compliance with statutory requirements. • Develop training programme for the PMU/PIUs staff, the contractors and others involved in the project implementation, in collaboration with the Environmental Specialist of the PMC and DSC • Review and approve the Contractor's Implementation Plan for the environmental measures, as per IEE. • Liaise with the Contractors and Consultants on the implementation of the Environmental management measures proposed in the IEE • Liaise with the various Government agencies on environmental and other regulatory matters • Continuously interact with the NGOs and Community groups to be involved in the project • Establish dialogue with the affected communities and ensure that the environmental concerns and suggestions are incorporated and implemented in the project. • Review the environmental performance of the project through an assessment of the periodic environmental monitoring reports submitted by the DSC; provide a summary of the same to the Project Director, and initiate necessary follow-up actions • Provide support and assistance to the Government Agencies and the Asian Development Bank to supervise the implementation of the IEE during the construction

Box 1: Terms of Reference of Safeguards Specialist – PMU

as well as operation stage of the project

- Document the good practices in the project on incorporation and integration of environmental issues into engineering design and on implementing measures in the construction, and dissemination of the same

Box 2: Terms of Reference of Safeguards Specialist (Environment) of DSC

- Prepare the IEE document and ensure adequacy under ADB SPS, 2009.
- Interact on a regular basis with the sector specialists of the DSC and integrate environmentally sound practices into the detailed design of project components.
- Advise PMU/PIU for compliance with statutory clearances.
- Work out the site specific mitigation measures for components as required and integrate the same into contractual provisions.
- Develop, organise and deliver environmental training programmes and workshops for the staff of the PIU and Contractors and in accordance to the Capacity Building Programme as specified in the IEE.
- Preparation of Activity Plans as identified in IEE (these include Site Management Plans, Waste Management Plans, Sludge Management and Disposal Plans, Occupational Safety Plans etc).
- Supervise the implementation of the Environmental provisions by the Contractors.
- Review and approve site specific environmental enhancement/mitigation designs worked out by the Contractor. Hold regular consultation meetings with the Environmental specialist of the PMU
- Review the Contractors' Environmental Implementation Plans to ensure compliance with the IEE.
- Develop good practice construction guidelines to assist the contractors in implementing the provisions of IEE.
- Prepare and submit regular environmental monitoring and implementation progress reports.
- Assist Environmental Specialist of the PMU to prepare good practice dissemination notes based on the experience gained from site supervision.

Box 3: Terms of Reference of Safeguards Specialist (Environment) of PMC

Support and Advice the PMU and Consultants team in-

- Review the IEE document and ensure adequacy under Safeguard Policy Statement, 2009 and identify any areas for improvement.
- Best Environmental Practices for responding to environmental issues involved with implementation of the projects on a sustainable basis
- Assistance and advice on institutional strengthening and capacity building at the PMU and PIU levels in regards to environmental practices.
- Ensure that baseline surveys, environmental monitoring plans and programs, initial environmental examinations (IEE) as may be required are carried out.
- Preparation of ADB procedure compliant environmental safeguard actions including impact assessment if any during the design stage

Box 3: Terms of Reference of Safeguards Specialist (Environment) of PMC
• Management plan and mitigation measures • Oversight of implementation of environmental standards and safeguards as part of project implementation • Participate in preparation of Master Plan for additional sites and contribute to the environmental safeguards to the plan and sub components • Preparation of performance monitoring reports

9. **Responsibility for updating IEE during detailed design.** DSC will update this IEE during detailed design and submit to PMU for final review before submission to ADB. PMC will assist PMU and coordinate with DSC.

10. **Responsibility for monitoring.** During construction, DSC's Environmental Specialist and the designated representative engineer of the PIU will monitor the contractor's environmental performance on day to day basis while PMC expert will randomly monitor the performance for corrective measures if required. During the operation phase, monitoring will be the responsibility of the Tourism Department.

1. **Responsibility for reporting.** The PMU, PIU, PMC and DSC will be responsible for environmental monitoring. PIU in coordination with DSC will submit monthly monitoring report to PMU thereafter the reports will be submitted to ADB on semi-annual basis. ADB will post the environmental monitoring reports on its website. Any major accidents having serious environmental consequences will be reported immediately. PMC environmental expert will help in preparing progress reports including environmental closure report. The sample field monitoring report and semi-annual environmental monitoring templates are attached as **Annexure- 9 & 10.**

B. EMP Tables

11. **Tables 7 to 9** show the potential adverse environmental impacts, proposed mitigation measures, responsible parties, and cost of implementation. This EMP will be included in the bid documents and EMP will be part of the Contract Agreement.

Table 5: Pre-Construction EMP Table

Parameters	Mitigation Measures	Parameter/ Indicator of Compliance	Responsible for Implementation	Responsible for Supervision	Frequency of monitoring	Source of Funds to Implement Mitigation Measures
Consents, permits, clearances, no objection certificate (NOC), etc.	• Obtain all necessary consents, permits, clearance, NOCs, etc. prior to start of civil works.	Consents, permits, clearance, NOCs, etc.	PMU	EA to report to ADB in environmental monitoring report (EMR)	check CFEs, permits, clearance, prior to start of civil works	PMU
	• Acknowledge in writing and provide report on compliance of all obtained consents, permits, clearance, NOCs, etc.	Records and communications	PMU	EA to report to ADB in EMR	Acknowledge upon receipt Send report as specified in CFE, permits, etc.	PMU
	• Include in detailed design drawings and documents all conditions and provisions if necessary	Detailed design documents and drawings	PIU/DSC	PMU and PMC PIU and DSC	Upon submission by contractor	PMU
Establishment of baseline environmental conditions prior to start of civil works	• Conduct documentation of location of components, areas for construction zone (camps, staging, storage, stockpiling, etc.) and surroundings (within direct impact zones). Include photos and GPS coordinates. • Prior to start of civil works ambient air quality and	Records/ Ambient air Parameter's (PM10, PM2.5, SO_2, $NO_{2,}$), water quality and ambient noise level	Contractor	PIU and DSC	Baseline data will be generated prior to start of civil work.	PMU

Parameters	Mitigation Measures	Parameter/ Indicator of Compliance	Responsible for Implementation	Responsible for Supervision	Frequency of monitoring	Source of Funds to Implement Mitigation Measures
	ambient noise level will be generated (once at one site except monsoon period).					
Erosion control	• Minimize the potential for erosion by balancing cuts and fills to the extent feasible. • Identify and avoid areas with unstable slopes and local factors that can cause slope instability (precipitation, seismic activity, slope angles, and geologic structure). • Minimize the amount of land disturbed as much as possible. Minimize vegetation removal. Stage construction to limit the exposed area at any one time.	Erosion control and re-vegetation plan covering construction phase	Contractor	PIU and DSC	During start of work	Contractor
Utilities	• Identify and include locations and operators of these utilities in the detailed design documents to prevent unnecessary disruption of services during the construction phase (if any). • Require contractors to prepare a contingency plan to include actions to be done in case of unintentional interruption of services. • Require contractors to	List and maps showing utilities to be shifted Contingency plan for services disruption	- DSC to prepare preliminary list and maps of utilities to be shifted	PIU and DSC	Upon submission by contractor,	DSC – preliminary design stage

Parameters	Mitigation Measures	Parameter/ Indicator of Compliance	Responsible for Implementation	Responsible for Supervision	Frequency of monitoring	Source of Funds to Implement Mitigation Measures
	obtain from the PIU and/or DSC the list of affected utilities and operators; • If relocations are necessary, contractor will coordinate with the providers to relocate the utility.					
Social and Cultural Resources	• Include state and local archaeological, cultural and historical authorities, and interest groups in consultation forums as project stakeholders so that their expertise can be made available. • Develop a protocol for use by the construction contractors in conducting any excavation work, to ensure that any chance finds are recognized and measures are taken to ensure they are protected and conserved.	Chance find protocol	- PMU/PMC to consult ASI or HP State Archaeology Department - PMC to develop protocol for chance finds	PMU	Included in IEE report	PMU/PMC
Sites for construction work camps, areas for stockpile, storage and disposal	• Will not promote instability and result in destruction of property, vegetation, irrigation, and drinking water supply systems, etc. • Residential areas will not be considered so as to protect the human environment (i.e., to curb accident risks, health risks due to air and water pollution and dust, and noise, and to prevent	List of pre-approved sites for construction work camps, areas for stockpile, storage and disposal Waste	- DSC to prepare list of potential sites DSC to inspect sites proposed by contractor if not included in pre-approved sites	PIU/DSC	Monthly	DSC

Parameters	Mitigation Measures	Parameter/ Indicator of Compliance	Responsible for Implementation	Responsible for Supervision	Frequency of monitoring	Source of Funds to Implement Mitigation Measures
	social conflicts, shortages of amenities, and crime). • Disposal will not be allowed near sensitive areas which will inconvenience the community. • The construction camp, storage of fuel and lubricants should be avoided at the river bank. The construction camp site for intake well should be finalized in consultation with DSC and PIU.	management plan				
Sources of construction materials	• Procure the sand and gravel from quarry sites and sources permitted by government. • Verify suitability of all material sources and obtain approval from PIU. • Submit to DSC on a monthly basis documentation of sources of materials.	Permits issued to quarries/sources of materials	Contractor PIU and DSC to verify sources (including permits) if additional is requested by contractor	PMU/PIU	Upon submission by contractor, monthly	PIU and DSC
Access	• Keep the site free from all unnecessary obstructions. • Notify affected sensitive receptors (visitors) by providing sign boards with information about the nature and duration of construction works and contact numbers for concerns/complaints.	Visual inspection	Contractor	PIU and DSC	Continuous during construction	Contractor

Parameters	Mitigation Measures	Parameter/ Indicator of Compliance	Responsible for Implementation	Responsible for Supervision	Frequency of monitoring	Source of Funds to Implement Mitigation Measures
Occupational health and safety	• Comply with IFC EHS Guidelines on Occupational Health and Safety • Develop comprehensive site-specific health and safety (H&S) plan. The overall objective is to provide guidance to contractors on establishing a management strategy and applying practices that are intended to eliminate, or reduce, fatalities, injuries and illnesses for workers performing activities and tasks associated with the project. • Include in H&S plan measures such as: (i) type of hazards in the intake wells site; (ii) corresponding personal protective equipment for each identified hazard; (iii) H&S training for all site personnel; (iv) procedures to be followed for all site activities; and (v) documentation of work-related accidents. • Provide medical insurance coverage for workers.	Health and safety (H&S) plan	Contractor	PIU and DSC	Continuous during construction	Contractor
Public consultations	• Continue information dissemination, consultations, and	- Disclosure records	PMC and DSC	PMU and PMC	- During preparation of	PMU/PMC/DSC

Parameters	Mitigation Measures	Parameter/ Indicator of Compliance	Responsible for Implementation	Responsible for Supervision	Frequency of monitoring	Source of Funds to Implement Mitigation Measures
	involvement/participation of stakeholders during project implementation.	- Consultations			IEE Report - During preparation of site- and activity-specific plans as per EMP - Prior to start of construction - During construction	
Fire fighting equipment's	• Fire extinguishers to be placed need training of identified personnel's during the construction/operation phase.	- Disclosure records - Consultations	PIU and DSC	PMU and PMC	-Prior to start of construction - During construction	Contractor
Identification of Muck disposal site	• Identify muck disposal areas in consultation with local municipality to dispose-off wastes if any.	- Disclosure records - Consultations	PIU and DSC	PMU and PMC	- Prior to start of construction - During construction	Contractor

Table 6: EMP Table during Construction Phase

Potential Impact	Mitigation Measures	Parameter/ Indicator of Compliance	Responsible for Implementation	Responsible for Supervision	Frequency of Monitoring	Source of Funds
Erosion hazards	• Provide temporary stabilization of disturbed areas while landscaping and construction of retaining walls and river front development and check dam works. • Maintain vegetative cover within unused area to prevent erosion.	Erosion control and re-vegetation plan	Contractor	PIU and DSC PIU to submit EMP monitoring report to PMU	- daily visual inspection by contractor supervisor and/or environment specialist - weekly visual inspection by DSC (more frequent during monsoon season and if corrective action is required) - random inspection by PMU, PIU, PMC and/or DSC	Contractor
Impacts on water quality	• Schedule construction activities during non-monsoon season, to the maximum extent possible.	Work schedule	Contractor	PIU and DSC PIU to submit EMP monitoring report to PMU	- daily inspection by contractor supervisor and/ or environment specialist - weekly visual inspection by	
	• Ensure drainages and water bodies within the construction zones are kept free of obstructions.	Visual inspection				
	• Keep loose soil material and stockpiles out of drains and flow-lines.	Visual inspection				

Potential Impact	Mitigation Measures	Parameter/ Indicator of Compliance	Responsible for Implementation	Responsible for Supervision	Frequency of Monitoring	Source of Funds
	• Avoid stockpiling of excavated and construction materials (sand, gravel, cement, etc.) unless covered by tarpaulins or plastic sheets.	Visual inspection			DSC (more frequent during monsoon season and if corrective action is required) - random inspection by PMU, PIU, PMC and/or DSC	
	• Re-use/utilize, to maximum extent possible, excavated materials.	condition in waste management plan				
	• Dispose any residuals at identified disposal site (PIU/DSC will identify approved sites).	condition in waste management plan				
	• Dispose waste oil and lubricants generated as per provisions of Hazardous and Other Wastes (Management and Transboundary Movement) Rules, 2016.	condition in waste management plan				
Impacts on air quality	• During construction ambient air quality testing will be done at one site (quarterly except monsoon period for 18 months at one site)	PM10, PM2.5, SO2, NO2,	Contractor	PIU/DSC	- Data will be generated during the construction phase.	Contractor
	• Conduct regular water spraying on stockpiles.	- Visual inspection - No complaints from sensitive receptors - Records	Contractor	PIU and DSC	- daily inspection by contractor supervisor and/ or environment specialist - weekly visual inspection by DSC (more	Contractor
	• Conduct regular visual inspection in the construction zones to ensure no excessive dust emissions.	Visual inspection				
	• Wet the surface before cleaning, if possible	Visual inspection				

Potential Impact	Mitigation Measures	Parameter/ Indicator of Compliance	Responsible for Implementation	Responsible for Supervision	Frequency of Monitoring	Source of Funds
					frequent during dry season and if corrective action is required) - random inspection by PMU, PIU, PMC and/or DSC	
Noise and vibrations impacts	• During construction noise quality testing will be done at one site (quarterly except monsoon period for 18 months at one site)	8 hourly dB(A)	Contractor	PIU/DSC	- Data will be generated during the construction phase	Contractor
	• Plan activities in consultation with PIU/DSC so that activities with the greatest potential to generate noise are conducted during periods of the day which will result in least disturbance.	Work schedule	Contractor	PIU and DSC	- daily inspection by contractor supervisor and/ or environment specialist - weekly visual inspection by DSC (more frequent during noise-generating activities and if corrective action is required) - random	Contractors
	• If specific noise complaints are received during construction, the contractor may be required to reschedule construction operations to avoid periods of noise annoyance identified in the complaint.	- Complaints addressed satisfactory - GRM records				

Potential Impact	Mitigation Measures	Parameter/ Indicator of Compliance	Responsible for Implementation	Responsible for Supervision	Frequency of Monitoring	Source of Funds
					inspection by PMU, PIU, PMC and/or DSC	
Impacts on flora and fauna	• Conduct site induction and environmental awareness. • Limit activities within the work area. • Replant trees in the area using minimum ratio of 2 new trees for every 1 tree cut. Replacement species must be approved by District Forest Department. • Use native species of plants during landscaping works	Records Barricades along excavation works Number and species approved by District Forest Department	Contractor	PIU and DSC	- daily inspection by contractor supervisor and/ or environment specialist - weekly visual inspection by DSC (more frequent if corrective action is required) - random inspection by PMU, PIU, PMC and/or DSC	Contractor
Impacts on physical and cultural resources	• Ensure no damage to structures/properties adjacent to construction zone. • Provide sign boards to inform nature and duration of construction works and contact numbers for concerns/complaints. • Increase the workforce to finish the works quickly	- Visual inspection - any impact should be addressed by project resettlement plan - no complaints received - photo-documentation - Records of workers deployment - Work schedule	Contractor In coordination with PIU and DSC for any structures within proposed site and construction zone	PIU and DSC	- daily inspection by contractor supervisor and/or environment specialist - weekly visual inspection by DSC (more frequent if	Contractor

Potential Impact	Mitigation Measures	Parameter/ Indicator of Compliance	Responsible for Implementation	Responsible for Supervision	Frequency of Monitoring	Source of Funds
	• Implement good housekeeping. Remove wastes immediately.	- Visual inspection - No stockpiled/ stored wastes			corrective action is required) - random inspection by PMU, PIU, PMC and/or DSC	
	• Ensure workers will not use nearby/adjacent areas as toilet facility.	- No complaints received - Sanitation facilities for use of workers				
	• Provide instructions on event of chance finds for archaeological and/or ethno-botanical resources. Works must be stopped immediately until such time chance finds are cleared by experts.	condition in chance find protocol				
Impact due to waste generation	• Prepare and implement a waste management plan. Manage solid waste according to the following hierarchy: reuse, recycling and disposal. Include in waste management plan designated/approved disposal areas. • Coordinate with PIU/DSC for beneficial uses of excavated soils or immediately disposal to designated areas. • Recover used oil and lubricants and reuse; or remove from the site. • Avoid stockpiling and remove immediately all excavated soils, excess construction materials, and solid waste (removed concrete, wood, trees and plants, packaging materials, empty containers, oils,	condition in waste management plan	Contractor	PIU and DSC	- daily inspection by contractor supervisor and/or environment specialist - weekly visual inspection by DSC (more frequent if corrective action is required) - random inspection by PMU, PIU, PMC and/or DSC	Contractor

Potential Impact	Mitigation Measures	Parameter/ Indicator of Compliance	Responsible for Implementation	Responsible for Supervision	Frequency of Monitoring	Source of Funds
	lubricants, and other similar items). • Prohibit disposal of any material or wastes (including human waste) into drainage, *nallah*, or watercourse.					
Impacts on occupational health and safety	• Comply with IFC EHS Guidelines on Occupational Health and Safety	- Visual inspection - Records	Contractor	PIU and DSC	- daily inspection by contractor supervisor and/ or environment specialist - weekly visual inspection by DSC (more frequent if corrective action is required) - random inspection by PMU, PIU, PMC and/or DSC	Contractor
	• Disallow worker exposure to noise level greater than 85 dB(A) for duration of more than 8 hours per day without hearing protection. The use of hearing protection shall be enforced actively.	- Visual inspection - Work schedule - Noise level monitoring in work area				
	• Provide H&S orientation training to all new workers to ensure that they are apprised of the rules of work at the site, personal protective protection, and preventing injury to fellow workers.	- Records - Condition in H&S plan				
	• Ensure that qualified first-aid can be provided at all times. Equipped first-aid stations shall be easily accessible throughout the site as well as at construction camps.	- Visible first aid equipment and medical supplies - Condition in H&S plan				
	• Provide medical insurance coverage for workers.	Records				
	• Secure construction zone from unauthorized intrusion and accident risks.	- Area secured - Trenches barricaded				
	• Provide supplies of potable	- Supply of water				

Potential Impact	Mitigation Measures	Parameter/ Indicator of Compliance	Responsible for Implementation	Responsible for Supervision	Frequency of Monitoring	Source of Funds
	drinking water.					
	• Provide clean eating areas where workers are not exposed to hazardous or noxious substances.	- Workers area				
	• Provide visitor orientation if visitors to the site can gain access to areas where hazardous conditions or substances may be present. Ensure also that visitor/s do not enter hazard areas unescorted.	- Records - Condition in H&S plan				
	• Mark and provide sign boards in the construction zone, and areas for storage and disposal. Signage shall be in accordance with international standards and be well known to, and easily understood by workers, visitors, and the general public as appropriate.	- Visible and understandable sign boards in construction zone - H&S plan includes appropriate signs for each hazard present				
Impacts on socio-economic activities	• Provide sign boards for tourists/visitors/locals to inform nature and duration of construction works and contact numbers for concerns/complaints.	Visible and understandable sign boards in construction zone	Contractor	PIU and DSC	- daily inspection by contractor supervisor and/ or environment specialist - weekly visual inspection by DSC (more frequent if corrective action	Contractor
	• Employ at least 50% of the labor force, or to the maximum extent, local persons within the 2-km immediate area if manpower is available.	Employment records				

Potential Impact	Mitigation Measures	Parameter/ Indicator of Compliance	Responsible for Implementation	Responsible for Supervision	Frequency of Monitoring	Source of Funds
					is required) - random inspection by PMU, PIU, PMC and/or DSC	
Impact on existing tourism activities near site	• hard barricades to be provided to protect the site • Signage to be provided for information of public • Existing roads and passage of tourists will be keep clear of any construction materials, obstacles, demolished materials etc for easy passage of tourists • Dust and noise suppression measures will be adopted to reduce air and noise pollution	• Visible and understandable sign boards in construction zone • Barricades available around the site • Roads and passage clear • Environmental monitoring report of ambient air and noise	Contractor	PIU/DSC	• Daily supervision by PIU/DSC site engineers • Weekly visual inspection by PMU/PMC • Random inspection by PMU/PIU/DSC / PMC environmental experts	Contractor

Table 7: EMP Table during Post-Construction Phase

Potential Impact	Mitigation Measures	Parameter/ Indicator of Compliance	Responsible for Implementation	Responsible for Supervision	Frequency of Monitoring	Source of Funds
Solid waste (debris, excavated soils, etc.)	• Backfill any excavation and trenches, preferably with excess excavation material generated during the construction phase.	Pre-existing condition Construction zone has been restored	Contractor within defect liability period	PIU and DSC PIU to submit EMP monitoring report to PMU	- visual inspection by contractor supervisor and/or environment specialist	Contractor
	• Use removed topsoil to reclaim disturbed areas.	-Do-	-Do-	-Do-	-Do-	-Do-
	• Re-establish the original grade and drainage pattern to the extent practicable.	-Do-	-Do-	-Do-	-Do-	-Do-
	• Stabilize all areas of disturbed vegetation using weed-free native shrubs, grasses, and trees.	-Do-	-Do-	-Do-	-Do-	-Do-
	• Restore access roads, staging areas, and temporary work areas.	-Do-	-Do-	-Do-	-Do-	-Do-
	• Restore roadside vegetation, if removed	-Do-	PIU/PMU*	-Do-	-Do-	PMU
	• Remove all tools, equipment, barricades, signs, surplus materials, debris, and rubbish. Demolish buildings/structures not required for O&M. Dispose in designated disposal sites.	-Do-	Contractor within defect liability period	-Do-	-Do-	Contactor
	• Monitor success of re-vegetation and tree re-planting. Replace all plants determined to be in an unhealthy condition.	Construction zone vegetation has been enhanced	PIU/PMU*	-Do-	-Do-	PMU

Potential Impact	Mitigation Measures	Parameter/ Indicator of Compliance	Responsible for Implementation	Responsible for Supervision	Frequency of Monitoring	Source of Funds
	• Request in writing from PIU/DSC that construction zones have been restored.	Certificate	PMU	PMC/PMU	-Do-	PMU
Environmental conditions	• Ambient air quality- During construction ambient air quality testing will be done at one site (quarterly except monsoon period for 18 months at one site)	PM10, PM2.5, SO_2, NO_2,	PMU	PMU/PMC	Data will be generated after the work is completed	PMU
	• Water testing- During construction surface water quality testing will be done at two sites (quarterly except monsoon period for 24 month at two sites)	pH, TDS, DO, BOD, Total coliform and Oil & Grease	PMU	PMU/PMC	Data will be generated after the work is completed	PMU
	• Noise testing- During construction noise quality testing will be done at one site (quarterly except monsoon period for 18 months at one site).	8 hourly dB(A)	PMU	PMU/PMC	Data will be generated after the work is completed	PMU

* ***The sites will be handed over to HPTDC as per MoU after construction for operation and maintenance Annexure 1.***

A. Summary of Site and Activity-Specific Plans as per EMP

12. Table 8 summarizes site and activity-specific plans to be prepared as per EMP tables.

Table 8: Site and Activity-Specific Plans/Programs as per EMP

To be Prepared During	Specific Plan/Program	Purpose	Responsible for Preparation	Responsible for Implementation
Pre-construction phase	Environmental monitoring program as per detailed design	Indicate sampling locations, methodology and parameters	PMC/DSC	PMU
Pre-construction phase	Erosion control and re-vegetation plan	Mitigate impacts due to erosion	PMC/DSC	Contractor
Pre-construction phase	List and maps showing utilities to be shifted	Utilities shifting	DSC during preliminary stage Contractor as per detailed design	Contractor
Pre-construction phase	Contingency plan	Mitigate impacts due to interruption of services during utilities shifting	Contractor	Contractor
Pre-construction phase	Chance find protocol	Address archaeological or historical finds	PMC/DSC	Contractor
Pre-construction phase	List of pre-approved sites	Location/s for work camps, areas for stockpile, storage and disposal	PIU and DSC	Contractor
Pre-construction phase	Waste management plan	Mitigate impacts due to waste generation	Contractor	Contractor
Pre-construction phase	H&S plan	Occupational health and safety	Contractor	Contractor
Pre-construction phase	Spill prevention and containment plan	Mitigate impacts of accidental spills of oil, lubricants, fuels, concrete, and other	Contractor	Contractor

To be Prepared During	Specific Plan/Program	Purpose	Responsible for Preparation	Responsible for Implementation
		hazardous materials		

B. Environmental Monitoring Program

101. Through integration of mitigation measures in project design, impacts are mostly insignificant, temporary in nature and can be properly avoided or mitigated by following proposed mitigation measures given in the EMP of this IEE report.

102. **Table 9** provides the indicative environmental monitoring program which includes relevant environmental parameters, with a description of the sampling stations, frequency of monitoring, applicable standards, and responsibility.

Table 9: Indicative Environmental Monitoring Program

Potential Impact	Parameter to be monitored	Proposed Locations	Method of Monitoring	Frequency of monitoring	Indicator of Compliance	Cost	Source of Funds
1. Detailed Design Phase							
Consents, permits, clearances, no objection certificate (NOC), etc.	- Consents, permits, clearance, NOCs, etc. - Records and communications - Detailed design documents and drawings	n/a	Visual inspection	check CFEs, permits, clearance, Acknowledge upon receipt Send report as specified in CFE, permits, etc.	Obtained prior to start of civil works Conditions of consents, permits, clearance, NOCs, etc incorporated in detailed design	already covered under PMU and PIU	PMU
Establishment of baseline environmental conditions prior to start of civil works and monitoring during-construction time	Ambient air quality – PM10, PM2.5, SO_2, NO_2,	One location proposed as under: 1. At Janjehli near subproject site	Collection of air samples (continuously 24 hours)	1. Prior to start of civil works (once at one site except monsoon period) 2. During construction (quarterly except monsoon period for 24 month at one site) -First quarter during January to March) -Second quarter during April to June) -Third quarter during October to	1. Baseline data will be generated prior to start of civil work. 2. Data will be generated during the construction phase. 3. Data will be generated after the work is completed	7,800 per sample (total eight samples) Transportation charges extra (1,000/- per sample)	PMU

Potential Impact	Parameter to be monitored	Proposed Locations	Method of Monitoring	Frequency of monitoring	Indicator of Compliance	Cost	Source of Funds
				December) 3. During post construction (once at one site except monsoon period).			
	Noise levels – day time	One location proposed as under: Janjehli near subproject site	Use of noise meters (once)	Prior to start of civil works (once at one site except monsoon period) 2. During construction (quarterly except monsoon period for 24 month at one site) -First quarter during January to March) -Second quarter during April to June) -Third quarter during October to December) 3. During post construction (once at one site except monsoon period)	1. Baseline data will be generated prior to start of civil work. 2. Data will be generated during the construction phase. 3. Data will be generated after the work is completed	4,000 per sample (total eight samples) Transportation charges extra (1,000/- per sample)	PMU

Potential Impact	Parameter to be monitored	Proposed Locations	Method of Monitoring	Frequency of monitoring	Indicator of Compliance	Cost	Source of Funds
	Water testing-pH. TDS, DO. BOD, Total coliform and Oil & Grease	Locations proposed as under: 1. Janjehi	As per IS code	1. Prior to start of civil works (once at four sites except monsoon period) 2. During construction (quarterly except monsoon period for 24 month at two sites) -First quarter during January to March) -Second quarter during April to June) -Third quarter during October to December) 3. During post construction (once at four sites except monsoon period)	1. Baseline data will be generated prior to start of civil work. 2. Data will be generated during the construction phase. 3. Data will be generated after the work is completed	6,000 per sample (total sixteen samples) Transportation charges extra (1,000/- per sample)	PMU
Erosion control	Erosion control and re-vegetation plan covering construction phase	n/a	Checking of erosion control and re-vegetation plan	Upon finalization of detailed design	Assessed in updated IEE report The contractor will submit a plan before any excavation work will take place during	already covered under PMU /PIU and Contractor	Contractor

Potential Impact	Parameter to be monitored	Proposed Locations	Method of Monitoring	Frequency of monitoring	Indicator of Compliance	Cost	Source of Funds
					construction phase.		
Utilities	List and maps showing utilities to be shifted Contingency plan for services disruption	n/a	Checking of list and maps showing utilities to be shifted Checking of contingency plan for services disruption	Upon finalization of detailed design	Assessed in updated IEE report Will be provided to contractor before start of civil work.	already covered under PMU/PIU /PMC/DSC and Contractor	PMU
Social and Cultural Resources	Chance find protocol	n/a	Checking of chance find protocol	Upon finalization of detailed design and during construction	Assessed in updated IEE report	already covered under PMU/PIU and PMC/DSC	NA
Sites for construction work camps, areas for stockpile, storage and disposal	List of pre-approved sites for construction work camps, areas for stockpile, storage and disposal	sites for construction work camps, areas for stockpile, storage and disposal	Visual inspection	Upon approval of site/s	Assessed in updated IEE report The contractor will submit a plan before the civil work starts.		NA
	Waste management plan	n/a	Checking of waste management	Upon finalization of detailed design	Assessed in updated IEE report	already covered under PMU/PIU and	NA

Potential Impact	Parameter to be monitored	Proposed Locations	Method of Monitoring	Frequency of monitoring	Indicator of Compliance	Cost	Source of Funds
			plan		The contractor will submit a plan before the civil work stars.	PMC/DSC	
Sources of construction materials	Permits issued to quarries/sources of materials	n/a	Checking of permits	Upon submission by contractor	contractor's submission	already covered under PMU/PIU and PMC/DSC	NA
Access	Traffic management plan	n/a	Checking of traffic management plan as per detailed design (alignment, routes, etc)	Prior to start of civil works	contractor's submission	contractor's cost	Contractor
Occupational health and safety	Health and safety (H&S) plan	n/a	Checking of H&S plan	Prior to start of civil works	contractor's submission	contractor's cost	Contractor
Public consultations	- Disclosure records - Consultations	- locations of affected persons - locations of stakeholders	Documentation of (minutes of consultations, date/s, location/s, issue/s raised, photographs, etc.)	- During updating of IEE Report - During preparation of site- and activity-specific plans as per EMP - Prior to start of construction - During construction	included in updated IEE	already covered under PMU/PIU and PMC/DSC	NA

Potential Impact	Parameter to be monitored	Proposed Locations	Method of Monitoring	Frequency of monitoring	Indicator of Compliance	Cost	Source of Funds
Identification of Muck disposal site	• Identify muck disposal areas in consultation with local MC to dispose off dismantle wastes of the building • Utilize the dismantle material as much as possible.	To be identified with MC	PIU and DSC	PMU and PMC	- Disclosure records - Consultations	PMU/PIU/ Contractor	
2. Construction Phase							
Erosion hazards	Erosion control and re-vegetation plan	- Construction zone - storage areas	Visual inspection	- daily visual inspection by contractor supervisor and/or environment specialist - weekly visual inspection by DSC (more frequent during monsoon season and if corrective action is required) - random inspection by PMU, PIU, PMC and/or DSC	- no erosion - erosion control in place - measures in erosion control and re-vegetation plan implemented	Contractor's cost	Contractor

Potential Impact	Parameter to be monitored	Proposed Locations	Method of Monitoring	Frequency of monitoring	Indicator of Compliance	Cost	Source of Funds
Impacts on water quality	- Any construction related materials - visible seepage of paints, oils, silts, etc. from storage areas - complaints related to water quality	Adjacent bodies of water including drainages, canals/nallahs, etc.	Visual inspection	- daily visual inspection by contractor supervisor and/or environment specialist - weekly visual inspection by DSC (more frequent during monsoon season and if corrective action is required) - random inspection by PMU, PIU, PMC and/ or DSC	- no visible change in pre-construction quality of adjacent bodies of water including drainages, canals/nallahs, etc. - no disposal and/ or seepage to adjacent bodies of water including drainages, canals/nallahs, etc.	Contractor's cost	Contractor

Potential Impact	Parameter to be monitored	Proposed Locations	Method of Monitoring	Frequency of monitoring	Indicator of Compliance	Cost	Source of Funds
Impacts on air quality	- water spraying on stockpiles - excessive dust emissions - vehicles “pollution under control” certificate from Himachal Pradesh SPCB - CFE and CFO for hot mix plants, crushers, diesel generators, etc., if to be used in the project - complaints related to air quality	- Construction zone - Sensitive receptors site/s	Visual inspection	- daily visual inspection by contractor supervisor and/or environment specialist - weekly visual inspection by DSC (more frequent during summer season and if corrective action is required) - random inspection by PMU, PIU, PMC and/or DSC	- no excessive dust emissions - no complaints from sensitive receptors - Valid pollution under control certificate/s. CFE, and/or CFO	Contractor’s cost	Contractor
Noise and vibrations impacts	- work schedule (limit to day time only in building complexes and other important areas) - activities with the greatest potential to generate noise (conducted during periods of the day	- Construction zone - Sensitive receptors site/s - silence zone/s	Visual inspection	- daily visual inspection by contractor supervisor and/or environment specialist - weekly visual inspection by DSC (more frequent during machine	- no complaints from sensitive receptors	Contractor’s cost	Contractor

Potential Impact	Parameter to be monitored	Proposed Locations	Method of Monitoring	Frequency of monitoring	Indicator of Compliance	Cost	Source of Funds
	which will result in least disturbance) - vehicle silencers and noise-reducing mufflers - complaints related to noise and vibrations			operation and if corrective action is required) - random inspection by PMU, PIU, PMC and/or DSC			
Impacts on flora and fauna	- site induction and environmental awareness - number of trees cut - number of trees replanted - survival rate of trees planted	- construction zone - sites approved by Forest Department for replanting, if any	Visual inspection	- daily visual inspection by contractor supervisor and/or environment specialist - weekly visual inspection by DSC (more frequent during monsoon season and if corrective action is required) - random inspection by PMU, PIU, PMC and/or DSC	- all contractor's employees have undertaken site induction and environmental awareness prior to mobilization - approved trees to be cut - approved tree species for replantation	Contractor's cost	Contractor
Impacts on physical and	- damage to structures/properties adjacent to	- construction	Visual monitoring	- daily visual inspection by contractor	- no damage to structures/properties adjacent	Contractor's cost	Contractor

Potential Impact	Parameter to be monitored	Proposed Locations	Method of Monitoring	Frequency of monitoring	Indicator of Compliance	Cost	Source of Funds
cultural resources	construction zone - sign boards to inform nature and duration of construction works and contact numbers for concerns/complaints - number of workforce near the school/s and other sensitive receptor/s - housekeeping practices, wastes around construction zones - toilet facilities for workers - transportation routes and schedule - chance find procedure	zone		supervisor and/or environment specialist - weekly visual inspection by DSC (more frequent during monsoon season and if corrective action is required) - random inspection by PMU, PIU, PMC and/or DSC	to construction zone - sign boards understandable by local people - sufficient number of workforce near the school/s and other sensitive receptor/s - wastes managed according to waste management plan - clean and usable toilet facilities for workers - transportation routes and schedule followed - no complaints from sensitive receptors - chance find procedures followed, as necessary		
Impact due to waste generation	- provisions of the waste management plan - quantity of	- construction zone	Visual monitoring	- daily visual inspection by contractor supervisor and/or	- wastes managed according to waste management plan - no complaints from sensitive	Contractor's cost	Contractor

Potential Impact	Parameter to be monitored	Proposed Locations	Method of Monitoring	Frequency of monitoring	Indicator of Compliance	Cost	Source of Funds
	excavated soils - quantity of used oil and lubricants - excess construction materials, and solid waste (removed concrete, wood, trees and plants, packaging materials, empty containers, oils, lubricants, and other similar items)			environment specialist - weekly visual inspection by DSC (more frequent during monsoon season and if corrective action is required) - random inspection by PMU, PIU, PMC and/or DSC	receptors		
Impacts on occupational health and safety	- IFC EHS Guidelines on Occupational Health and Safety - noise level and duration of exposure - PPEs, high visibility vests, hearing protection, etc. - conduct of H&S orientation training - qualified first aider and equipped first aid stations	- construction zone	- visual monitoring - checking of records	- daily visual inspection by contractor supervisor and/or environment specialist - weekly visual inspection by DSC (more frequent during monsoon season and if corrective action is required) - random inspection by PMU, PIU, PMC	- conditions in H&S plan - all workers oriented on H&S plan - use of PPEs, etc at all times - max of 80 dB(A) and 8 hours exposure - visible first aid equipment and medical supplies - areas secured - trenches barricaded - adequate potable drinking	Contractor's cost	Contractor

Potential Impact	Parameter to be monitored	Proposed Locations	Method of Monitoring	Frequency of monitoring	Indicator of Compliance	Cost	Source of Funds
	- medical insurance coverage for workers - security in construction zone - potable drinking water supply - clean eating areas - conduct of visitor orientation - audible back-up alarms for vehicles - sign boards in the construction zone - site accident records			and/or DSC	water - clean eating areas away from hazardous or noxious substances - visible and understandable sign boards in construction zone		
Impacts on socio-economic activities	- % of locals in labor force - complaints/ grievances	- construction zone	checking of records	- random inspection by PMU, PIU, PMC and/or DSC - during complaints/ grievance redressal	- least 50% of the labor force, or to the maximum extent, local persons within the 2-km immediate area if manpower is available - complaints/ grievance addressed as per GRM	Contractor's cost	Contractor
3. Post-construction Phase							

Potential Impact	Parameter to be monitored	Proposed Locations	Method of Monitoring	Frequency of monitoring	Indicator of Compliance	Cost	Source of Funds
Solid waste (debris, excavated soils, etc.)	- disturbed areas	- construction zone	visual inspection	upon completion of civil works prior to turn over to asset owner	- backfilled any excavation and trenches - reclaimed disturbed areas. - Re-established original grade and drainage pattern to the extent practicable. - stabilized all areas of disturbed vegetation using weed-free native shrubs, grasses, and trees - restored access roads, staging areas, and temporary work areas. - restored roadside vegetation, if removed - removed all tools, equipment, barricades, signs, surplus materials, debris, and rubbish. - success of re-vegetation and tree re-planting. Replaced all plants determined to be in an unhealthy condition. - documentation from PIU/DSC that construction zones have been restored.	Contractor's cost	Contractor

Potential Impact	Parameter to be monitored	Proposed Locations	Method of Monitoring	Frequency of monitoring	Indicator of Compliance	Cost	Source of Funds
						PMU cost	PMU

C. Capacity Building

103. The Environmental Specialist of the DSC will provide the basic training required for environmental awareness followed by specific aspects of infrastructure improvement Projects along with Environmental implications for projects. Specific modules customized for the available skill set will be devised after assessing the capabilities of the members of the Training Programme and the requirements of the project. The entire training will cover basic principles of environmental assessment and management; mitigation plans and programmes, implementation techniques, monitoring methods and tools. The proposed training program along with the frequency of sessions is presented in **Table 12** below. This training program is intended for the entire destination and is not just specific to this package.

Table 1: Training Modules for Environmental Management (Common for Entire Project)

Program	Description	Participants	Form of Training	Duration/ Location	Training Conducting Agency
A. Pre-Construction Stage					
Sensitization Workshop	Introduction to Environment: Basic Concept of environment Environmental Regulations and Statutory requirements as per Govt. of India and ADB	Tourism / Forest / Roads / Culture Department Officials, Project Director (PD) and Environmental Specialist (ES) of the PMU/PIU	Workshop	½ Working Day	Environmental Specialist of the PMC and DSC
B. Construction Stage					
Module 1	Roles and Responsibilities of officials / contractors / consultants towards protection of environment Implementation Arrangements	Engineers and staff of line depts. of GoHimachal Pradesh, and PMU/PIU (including the ES)	Lecture / Interactive Sessions	½ Working Day	Safeguards Specialist of the PMC and DSC
Module 2	Monitoring and Reporting System	Engineers and staff of implementing agencies and PMU/ PIU (including ES)	Lecture / Interactive Sessions	½ Working Day	Safeguards Specialist of the PMC and DSC

D. EMP Implementation Cost

104. As part of good engineering practices in the project, there have been several measures as safety, signage, dust suppression, procurement of personal protective equipment, provision of drains, etc. and the costs for which will be included in the design costs of specific subprojects. Therefore, these items of costs have not been included in the IEE budget. Only those items not covered under budgets for construction are considered in the IEE budget.

105. This is a small construction project and it is not expected to cause much significant air, water and noise pollution. The main EMP cost will arise from monitoring of environmental

parameters (air, water and noise) and training.

106. The costs of water sprinkling for dust suppression and providing personal protective equipment's to construction workers shall borne by contractor as part of conditions of contract. In addition the sources of funds for Mitigation measures during construction stage including monitoring during construction stage are also to be borne by the contractor. These are deemed to be included as part of the contract price amount quoted by the contractor for the works. The costs of components for monitoring in operation stage and the capacity building costs are to be funded by the PMU. The EMP cost is given in the Table 13 below.

Table 11: Indicative EMP Budget

S.N.	Particulars	Stages	Unit	Total number	Rate (INR)	Cost (INR)	Source of fund
A. Monitoring Measures							
1.	Air quality monitoring- 24 hourly (PM_{10}, $PM_{2.5}$, SO_2, NO_2) (One Location)	Prior to start of civil works (once at one site except monsoon period) 2. During construction (quarterly except monsoon period for 18 month at two sites) -First quarter during January to March) - Second quarter during April to June) -Third quarter during October to December) 3. During post construction (once at one site except monsoon period)	Per sample	14	7,800	109200	PMU/ Contractor
	Transportation & sampling cost			14	1,000	14000	
2	Water Tests- pH, TDS, DO, BOD, Total coliform and Oil & Grease-IS code (Two Locations)			7	6,000	42000	
	Transportation & sampling cost			7	1,000	7000	
3	Noise Levels -Day time by noise meter (One Location)		Per sample	14	4,000	56000	
	Transportation & sampling cost			14	1,000	14000	
Sub- Total (A)						**2,42,200**	
B. Capacity Building – Training cost							

S.N.	Particulars	Stages	Unit	Total number	Rate (INR)	Cost (INR)	Source of fund
1	Sensitization Workshop	Pre-Construction	L.S			1,50,000	PMU
2	Training Session I	Construction	L.S			1,50,000	
3	Training Session II	Construction	L.S			1,50,000	
Sub -Total (B)						**4,50,000**	
Total (A+B) INR						**6,92,200**	

IX. FINDINGS AND RECOMMENDATIONS

107. The proposed components as part of the package are in line with the sub-project selection criteria for the program. The subproject conforms to all GoI and ADB regulations, policies, and standards including all necessary government permits and clearances

108. The specific management measures laid down in the IEE will effectively address any adverse environmental impacts due to the sub-project. The effective implementation of the measures proposed will be ensured through the building up of capacity towards environmental management within the PMU supplemented with the technical expertise of a Safeguards Specialist as part of the DSC Consultants. Further, the environmental monitoring plans provide adequate opportunity towards course correction to address any residual impacts during construction or operation stages.

X. CONCLUSIONS

109. The IEE carried out for the sub-project show that the proposed sub-components will result in net environmental benefits, and that any adverse environmental impact can be addressed through proper location, planning and design of the proposed sub-project; control of construction activity and mitigation measures. The EMP provides for mitigation of all identified impacts and the Contract clauses for the environmental provisions will be part of the civil works contracts. Further, the proposed designs have been consulted with the stakeholders and no significant issues requiring redress in terms of environmental safeguards are known to exist at present.

110. Based on the findings of the IEE, there are no significant impacts and the classification of the subproject as Category “B” is confirmed. No further special study or detailed environmental impact assessment (EIA) needs to be undertaken to comply with ADB SPS (2009).

Blank Page

Appendix 6.2

Resettlement Plan / Due Diligence Report (DDR)

Blank Page

INVOLUNTARY RESETTLEMENT DUE DILIGENCE REPORT

Document Stage: Due Diligence Report
ADB Loan No 3223-IND, IDIPT-HP, Tranche 3
Package no- HPTDB/15/2

Subproject – Creation of Tourist Cultural Centre, Janjehli, Distt. Mandi

March, 2018

Infrastructure Development Investment Program for Tourism (IDIPT) - Himachal Pradesh

Prepared by the Government of Himachal Pradesh for the Asian Development Bank

The DDR is a document of the borrower. The views expressed herein do not necessarily represent those of ADB's Board of Directors, Management, or staff, and may be preliminary in nature.

ABBREVIATIONS

ADB	-	Asian Development Bank
IDIPT	-	Infrastructure Development Investment Program for Tourism
BPL	-	Below poverty line
DSC	-	Design and Supervision Consultants
GRC	-	Grievance Redress Committee
PIU	-	Program Implementation Unit
PMC	-	Program Management Consultants
PMU	-	Project Management Unit
LAA	-	Land Acquisition Act
MFF	-	Multi-tranche financing facility
NGO	-	Nongovernmental organization
OMC	-	Operations and Maintenance Contractors
PAH	-	Project affected household
SDS	-	Social Development Specialist
RP	-	Resettlement Plan
DDR	-	Due-Diligence Report
GoI	-	Government of India
GoHP	-	Government of Himachal Pradesh
SO	-	Safeguard Officer

Table of Contents

I. Introduction 3
A. Project Background 3
B. Need of the Sub-project 4
C. Location of the project site 5
D. Objectives of the sub-project 7
E. Scope of the Sub-project 8
F. Sub-project Components 8
E. Requirement of Due-Diligence Report 9
H. Project Outcome and Impact 10
II. Extent of Impact 10
A. Scope of Land Acquisition and Resettlement 10
B. Indigenous Peoples 10
C. Gender Issues 10
III. Grievance Redressal Mechanism 11
IV. Public Consultations 11
V. Key Findings 12
VI. Other Social Measures and Recommendations: 12
VII. Conclusions 13

Figure 1 : Required Improvements in Janjehli as per consultations with community. 4
Figure 2 :: Index Map of Janjehli Site 5
Figure 3 :: View of Janjehli Valley 6
Figure 4 :: Sub-project Location - Jhanjeli 6
Figure 5 :: Site Plan for Janjehli 9

Annexure 1 : List of Available Infrastructure 14
Annexure 2 : Concept Plan - Jhanjeli 15
Annexure 3: Involuntary Resettlement Checklist 16
Annexure 4: Indigenous Peoples Impact Checklist 18
Annexure 5: Office orders of GRC set-up at PMU level 20
Annexure 6: Office orders of GRC set-up at PIU, Kullu level 22
Annexure 7: Consultations with Stakeholders 23

I. Introduction

A. Project Background

1. The Infrastructure Development Investment Program for Tourism (IDIPT) envisages an environmentally and culturally sustainable and socially inclusive tourism development, in the project states of Himachal Pradesh, Punjab, Tamil Nadu and Uttarakhand. The expected impact of the Project in the four states is sustainable and inclusive tourism development in priority State tourism sub circuits divided into marketable cluster destinations that exhibit enhanced protection and management of key natural and cultural heritage tourism sites, improved market connectivity, enhanced destination and site environment and tourist support infrastructure, and enhanced capacities for sustainable destination and site development with extensive participation by the private sector and local communities.

2. The picturesque Janjehli is situated at an elevation of 2150 mtrs. A lush green valley with agricultural fields in gentle slopes, apple orchards, hills covered with pine and deodar trees and a small river having crystal clear water moving like a snake through various criss-crossed hills Janjehli alongwith adjoining Keolidhar, Bagsaid valleys are a gift of nature to this district. Janjehli is loved by trekker and nature lover alike. The valley adorned by snow during winters, is no less than heaven on the earth. The art lovers must have glimpses of traditional wood carving and metal work. Visit to Janjehli is not complete without having blessing of Shikari Mata. Budha Kedar is situated at an altitude of 9000 feet Budha Kedar can be visited by trekking a distance of 4 kms from HPTDC Trekker's Hostel at Kataroo near Janjehli. The place is endowed with natural beauty. Deodar trees, streams of crystal clear water attract the tourists. The traditions have it that during exile Pandavs came here and saw Nandi at this place. Nandi jumped on a rock to save itself from Bhima of Mahabharata and disappeared through the rock. The hole has the shape of the back of the bull. People worship at this place and take holy bath in the nearby stream. Pandav Shila (Rock) is situated just 3 kms ahead of Janjehli village on the bank of Bhekhli Khad in village Dhar Jarol Pandav Shila is believed to be of Mahabharata era. People believe that if a pebble thrown on the rock stays on it their wishes are fulfilled. It is also said that a person with true belief can have slight movement by hand push on the top of the rock.

3. Janjehli is loved by trekkers and nature lovers alike. The valley is adorned by snow during winters and is no less than heaven on the earth. Budha Kedar which is situated at an altitude of 9000 feet can be visited by trekking at a distance of 4 kms from HPTDC Trekker's Hostel at Kataroo near Janjehli. There are many expedition and trekking routes like Janjehli to Gadagushaini and Banjar in Kullu, trek to Karsog, trek to Shikari Devi etc. Magru Galla above Janjehli on Janjehli to Chhetri road is another picnic hot-spot. The area has potential for adventure sports and due to lack of infrastructure and basic amenities the area is not so popular on tourist map. The tourists who travel to Janjehli could not find good infrastructure alongwith Himachali Cuisine; therefore the tourists do not like to visit the area. The area has lot of potential for camping, trekking and other adventure activities. With the coming up of this project the area will be open to the tourists which will improve the economy of the area and create job opportunity for the youths.

B. Need of the Sub-project

3. The region is unexplored and virgin and has ample strength to attract tourists. At present only trekkers and devotees of *Shikara Devi Mata* (an ancient temple of Mahabharata times) are found visiting the region. The area is not known to the world outside the state, and hence less number of tourists visit the area. Since not many people visit the area, there was no demand for improved infrastructure, it remained a silent getaway for few trekkers & visitors to temple. The present area lacks proper hotels and infrastructure needed to encourage the tourists to visit the site. Only few small hotels and Homestays are available in area. The list of infrastructure available is enclosed at **Annexure 1**. The present road is being upgraded and widened, With the completion of road widening more tourists are expected in the area . The area is bestowed with abundant natural beauty and acts as base station of Trekkers.

4. The region has high potential to be developed as a tourist destination, it has natural resources in abundance and provide excellent souvenirs like *seraji pulas* made of hemp and household wares made of walnut wood, it is also famous for its honey. The region gives a serene land traditional *himachali* village look, improvement in basic infrastructure/amenities & connectivity will attract more tourists/visitors and encourage their longer stay consequently contributing in the local economy. The concept plan in attached in **Annexure 2.**
5. An inclusive proposal is therefore needed to develop the area as a major tourist destination not losing the existing character. Hence the building structures that will be erected at the site will be humble structures built in the indigenous architectural style. Any other constructions done will be in harmony with the natural surroundings.

Figure 1 : Required Improvements in Janjehli as per consultations with community.

<table>
<tr>
<td> </td>
<td> </td>
</tr>
<tr>
<td>Protection of Water Resource – Bhakli Khad</td>
<td>Camping Area could be Developed</td>
</tr>
</table>

Street Lights Required	

C. Location of the project site

6. Janjehli is a beautiful village in Saraj valley of Mandi District of Himachal Pradesh. It is about 488 kms from Delhi, 242 kms from Chandigarh, 150 kms from Shimla and 90 kms from Mandi town at an elevation of 2150 meter above sea level. Janjehli is surrounded by pine forest and mountains, one of the best place for adventure activities like, night safari, hiking, trekking and mountaineering. At the distance of 10 km from Janjehli is the Shikari Mata temple at a height of 3300 meter. There are trekking options for Shikari Devi from Janjehli. Janjehli valley is under Thunag Tehsil of Mandi District and is 13 km from main Thunag area.

Figure 2 :: Index Map of Janjehli Site

Source: Google , Sketch made as per field visit . The boundaries marked in sketch are approximate and will change as per revenue records and actual field demarcation.

Figure 3 :: View of Janjehli Valley

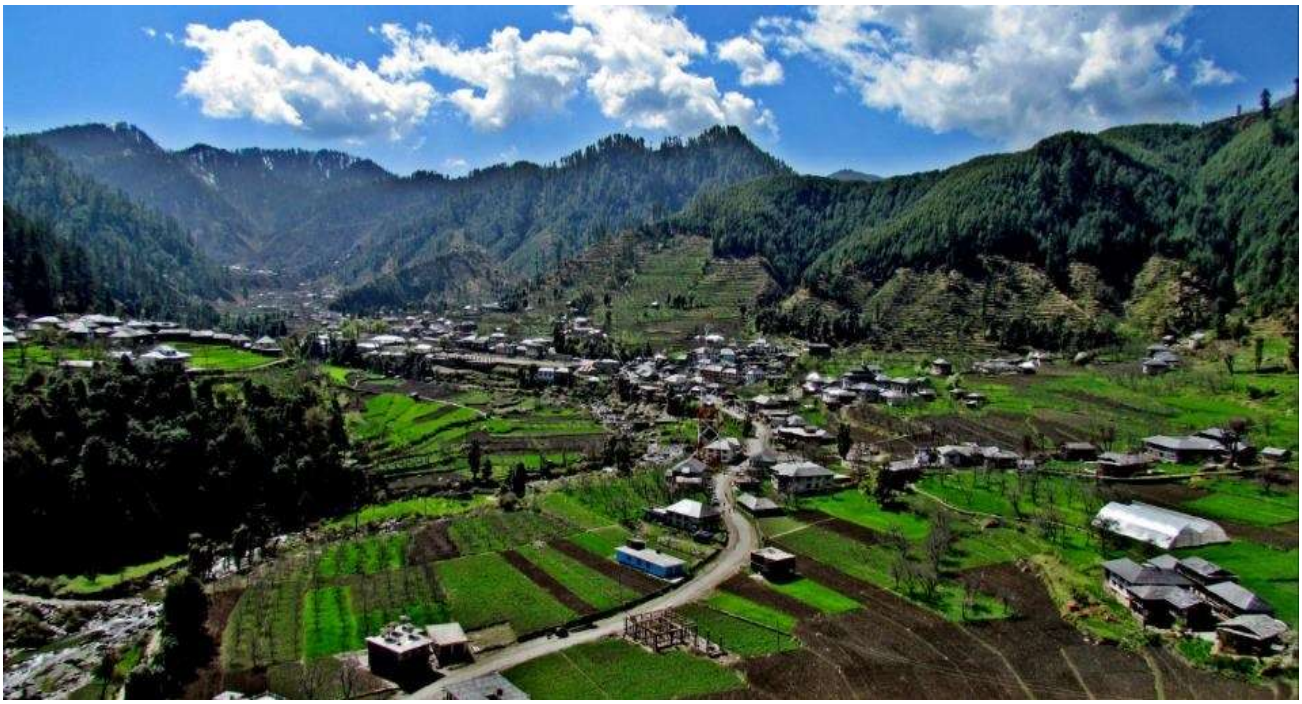

Figure 4 :: Sub-project Location - Jhanjeli

Area Adjacent Panchayat Bhawan	***Area Besides Bhawan***
Trekker's Hostel	***Ambedkar Bhawan adjacent to site.***

Bhakli Khad between Parcel 2 & Parcel 3	***Existing Bridge to site***

D. Objectives of the sub-project

7. The macro objective of the sub-project is to conserve the natural scenic beauty of Janjehli along with maintaining its traditional culture and promoting tourism in the area contributing towards the development of local economy.

8. The micro objectives of the sub-project are mentioned below:

(i) To improve the infrastructural status of the area, along with landscaped garden.

(ii) To preserve, nurture and promote local culture, local skills and traditional crafts, arts and food, thereby improving the socio-economic status of artisans and craftsmen in the local community.

(iii) To facilitate showcasing and marketing of the products prepared by local craftsmen.

(iv) To propagate and publicise traditional crafts, music and food products of the region by setting up of commercial outlets and construction of Convention Centre/Hall.

(v) To provide opportunities for local communities, particularly women's groups, linking them to the cultural and natural heritage tourism and to generate and improve livelihood opportunities for them.

(vi) Enabling proper mechanism for maintaining the site through regular stakeholder & public consultations & engaging them in the tourism sector so that they remain connect to their regional heritage.

(vii) It is expected that the above interventions will bring about infrastructure development and improve economy of the region.

(viii) The project will help to boost the economy of local people of Janjehli and of the state, by promoting their involvement in tourism sector & opening job opportunities for them.

(ix) It will be a new sought after tourist destination, and allow trekkers decent stay in Thunag and Jhanjeli diverting tourist flow enroute to Mandi / Manali towns and other major tourist's destination of the State.

E. Scope of the Sub-project

9. The sub-project seeks to preserve local culture, traditional arts and crafts on one hand and encourage sale of products produced by craftsmen of the region. This will be done by:

(i) Promotion and propagation of the traditional crafts, music and local cuisine through Exhibitions, Cultural Programmes like Concerts, Folk Music, Traditional Dances and Folk Theatre and Eateries/Restaurants.

(ii) Tourist Cultural Centre at Janjheli

(iii) Trekkers Hostel at Thunag:

(iv) Allied works around surrounding areas of the project

F. Sub-project Components

10. Subproject Package HPTDB/15/2 is one of the subprojects to support tourist clusters inclusive of management-plan/master-plan based investments (IDIPT Output 1) and support improvement of basic tourist facilities and amenities for tourist attractions. The scope of the subproject comprises of three components as described below:

A. **Tourist Cultural Centre at Janjheli**: Following works are proposed to be undertaken under this component:

i. Visitor Blocks
ii. Convention Center Building
iii. Restaurant Cum OAT
iv. Open Parking, Approach Roads & Paths
v. Gazebo
vi. Bridge
vii. Water Front Development & Check Dams
viii. Outer Compound Wall/Fencing and Toe Walls/ Retaining Walls & River Front Development and Check dam
ix. Elevator
x. Land Scaping Works
xi. Toilet Blocks - Jhinjeli - 2 No's
xii. Rain Shelter - Jhinjeli - 2 No's
xiii. Trekking Hostel Renovation
xiv. SWISS Tents 5 Nos
xv. Water supply and sanitary installation
xvi. Electrical, Fire fighting, CCTV, EPBAX, DG Set and Transformer
xvii. Septic Tank for Swiss Tents
xviii. Rain Water Harvesting Tank , Fire fighting Tank, UGWT, Soak pit and Septic tank.
xix. Pre fabricated Security Cabin
xx. Improvement of Area around Pandav Shila

B. Trekkers Hostel at Thunag:

i. Trekking Hostel – Thunag
ii. Soak pit and Septic Tank for Thunag Hostel

C. Allied works around surrounding areas of the project

i. Improvement of Steps, Provision of Railings, Sitting Benches, Trek and Renovation of existing Sarai

Figure 5 :: Site Plan for Janjehli

E. Requirement of Due-Diligence Report

11. There is no land acquisition requirement; hence no resettlement impacts, in this subproject As there is no involuntary resettlement involved in this sub-project and the preparation of RP for this sub-project is not required, The objective of this Due Diligence Report (DDR) is to review the Subproject Land acquisition and Resettlement (LAR) impacts, if any, based on the detailed design and propose mitigation measures, if necessary in accordance with ADB Safeguard Policy Statement (June, 2009).

12. In accordance with Safeguard Policy Statement requirements, the project is defined as 'C' category for involuntary resettlement impact. The preliminary design and later on the detailed design of this sub-project showed that the rehabilitation and construction would be conducted on property owned by the Government, by the Department of Horticulture & Local Administration - Dhim Kataru Panchayat and by the Irrigation & Public Health Department.

13. Prior to detailed design, the requisite land records conforms that the land belongs to Government of Himachal Pradesh. Verification was done also in the field, based on the survey and measurement.

H. Project Outcome and Impact

14. The expected outcomes and possible impacts of the sub-project are:
    - The State will have a new tourist destination. The project will publicize/upload Janjehli region tourist activities on the websites.
    - The region will have improved infrastructure & amenities.
    - Tourism activities which were dormant till now will get a boost in the region.
    - Another tourist destination will invite more tourists/visitors in the State.
    - Tourists will have more options for enjoying adventure activities.
    - Improvement of infrastructure & amenities in the area will further improve the region's aesthetic as well as land value.
    - Diversion of tourist flow will impact on decongestion of traffic in Mandi town as well as other parts of Himachal Pradesh.
    - Tourism activities in the region will increase livelihood opportunities for the locals.
    - The project will boost the economy of local people of Janjehli and Thunag as well as of the State.

II. Extent of Impact

15. Activities related to tourism improvement in the region will consequently enhance the socio-economic status of the locals and will also improve the city's aesthetic value and land value therein. Tourists will have a new destination to spend leisure time & enjoy. The State Government on the other hand will have increase in revenue generation.

A. Scope of Land Acquisition and Resettlement

16. The sub-project will not entail any permanent or even temporary land acquisition and resettlement. Site Assessment was conducted in the proposed areas where works will be undertaken. Based on it there will be no expected impacts on private/public land, private properties like housing, shops, commercial buildings, religious, community infrastructure or on any common resource property. Neither any negative impacts on livelihood of locals are envisaged. The proposed area is Government land. **Figure 5** shows some photographs of the proposed sites**. See Annexure 3** for Involuntary Resettlement Checklist.

B. Indigenous Peoples

17. There will be no impact on indigenous peoples (IPs). The sub project area does not have any tribal population and thus there is no impact on their lives/livelihood. This is categorized as "C" for Indigenous Peoples. No Indigenous Peoples Plan (IPP) will be needed to be prepared for this sub-project. Indigenous Peoples Impact Categorization checklist is attached in **Annexure 4.**

C. Gender Issues

18. The project will not have any adverse impact on the local women or any other. However positive impact is envisaged by ensuring as far as possible employment generation for both skilled and unskilled women. Women in the area, if they desire will have options to improve their livelihood. In addition, the Community Based Tourism (CBT) component is focusing on skill upgradation/ empowerment/ income generation of women. Special care is being taken that the benefits are

made available to women who are more vulnerable. The activities of this project aim at addressing the gender needs and ensure gender equity.

III. Grievance Redressal Mechanism

19. The EA has established a mechanism to receive and resolve the issues of resettlement/rehabilitation of APs, their concerns and grievances about physical and economic displacement and other project impacts, paying particular attention to the impacts on vulnerable groups.

20. The grievance redress mechanism intends to address concerns and complaints of APs as promptly as possible, using an understandable, transparent & mutually aggregable process. The resolving approach is most often cost effective, gender responsive, culturally appropriate, and readily accessible to the displaced/affected persons.

21. A Grievance Redress Committee (GRC) has been formed at the PMU Level and at PIU level (See **Annexure 5 & 6**). The GRC will continue to function, for the benefit of the APs, providing them with aggregable solutions during the entire project cycle.

IV. Public Consultations

22. Census Survey was not undertaken because of the reasons mentioned above, i.e. there is no physical or economic, temporary or permanent, IR impact. No person or community is being adversely affected by this sub-project. No land or asset acquisition is necessary in this sub-project. There is no issue of physical or economical displacement of local people/establishments due to the sub-project activities. The vulnerable category - poor, indigenous and other ethnic groups are not being adversely impacted either. Since there were no APs, Census and (Baseline) Socio-Economic Survey was not conducted. A summary of resettlement impact and the socio-economic table therefore is redundant. A few public consultations were conducted by the project team to understand the possible impacts of the project.

23. Focused Group Discussions (FGDs) and individual interviews were held involving all stakeholders. Consultations were carried out with the District Administration, Department of Tourism, Department of Horticulture, Panchayat, villagers, shop owners and tourists on the project components. Issues such as infrastructure/amenities availability & accessibility in Janjehli, what the project aims to bring in, possible impact of project on locals & vice versa, in addition what needs to be done or possibly can be done was discussed. Consultation with primary and secondary stakeholders was conducted to understand the local issues, local needs & concerns. Further, discussion was on awareness and extent of the project and development components, benefits of project for the locals as well as commercial interest, labor availability in the project area or requirement of labors from outside, possible impact during & after the construction work, local issues that may affect project construction work, water logging, drainage problem, drinking water problem etc. Summary of consultation attached in **Annexure 7.**

24. During consultation & discussion, participants were of the view that this sub-project is important for the region and very much needed. This initiative will create more job opportunities and hence willingly accept the project & will fully supported the project. Though they gave some suggestions & there was no opposition for this sub-project.

V. Key Findings

25. In this sub-project, full or partial, permanent or temporary, physical and economic displacements are conspicuously absent. There are no Project Affected Persons (PAPs), no land or structure is to be acquired, no common property resources are affected. Even no negative impact on livelihood either temporary or permanent is likely to occur.

26. Thus, this subproject has been categorized as "C" for Involuntary Resettlement (IR) impact as per the ADB's Safeguard Policy Statement, 2009 (SPS). IR checklist is attached in **Annexure 4.**

VI. Other Social Measures and Recommendations:

27. All the works will be undertaken on the Government land, so there will be no need to acquire land, and thus there will be no impacts on the asset or landowners or tenants etc. As far as health and safety issues is concerned, the contractor shall adhere to the following code of conduct while undertaking construction activities:

i. Provision of adequate health and safety measures such as water, food, sanitation, personal protective equipment, workers insurance and medical facilities at site.
ii. Local labors and female workers would be encouraged to work, so their socio-economic status can be enhanced.
iii. Construction wastes to be removed regularly from the site on scheduled clean-up days. Site maintenance including labor camp area to be regularly monitored.
iv. Entire area will be declared as plastic free, smoke free and silence zone and sign boards for the purpose should be displayed at work site.
v. Safety signages & awareness posters on other social concerns are placed at strategic locations.
vi. Welfare programs are organized & planned to retain labors at work site, particularly women labors.

Table 1: Action Required during Execution of Works

Issues	Action to be Ensured
Staff & Labor	Local people to be employed. Include women, poor & vulnerable groups in the implementation of the Project activities. Engage women workers in construction and rehabilitation work, ensuring implementation of core labor standards such as equal pay for work of equal value, and protection of women from discrimination and other forms of harassment. Contractor should provide labor details on monthly basis to PIU.
Prohibition of engaging Child Labor in construction activities.	The Contractor shall not employ any child to perform any work, including work that is economically exploitative, or is likely to be hazardous to, or to interfere with, the child's education, or to be harmful to the child's health or physical, mental, spiritual, moral or social development. "Child" means a child below the statutory minimum age specified under applicable national, provincial or local law of India.
Health and Safety	• The Contractor shall conduct health and safety programs for workers employed under the project and shall include information on the risk of sexually transmitted diseases, including HIV/AIDS in such programs. • Contractor to ensure insurance of labor (complete insurance and not third-party insurance). • Contractor to provide adequate mobile toilets on site, contractor to

Issues	Action to be Ensured
	provide creche for labor's children if found necessary. • Adequate safety at site including barricading, sign boards, helmets, PPEs, fire extinguishers etc.
Works schedule in festival time	Special festival, business etc. days will be strictly followed and works causing disturbance will not be carried out on those days.
Night Time Work	• Night time work, if any, shall be carried out after due authorization from concern authorities, with adequate safety and security measures. Acoustic hood shall be used on equipment to reduce noise pollution. • Female workers, if any, shall not be involved in night time work.
Abide Resettlement Framework Guidelines	Contractor to follow Social Safeguard Guidelines/ SMP which includes: 1. **Mitigate adverse impact:** Contractor's actions to ensure there is no income/access loss. This includes: leaving spaces for access between mounds of soil, providing walkways and metal sheets to maintain access across trenches for people and vehicles where required, increased workforces to finish work in areas with impacts on access, timing of works to reduce disruption during business hours, phased construction schedule and working one segment at a time and one side of the road at a time. Contractor to timely notify any change in scope due to site conditions. Should follow Resettlement Framework/ guidelines issued from time to time.
Registered Grievances at Site	All Grievances and Complains should be registered at site and contractor related issues should be resolved.

VII. Conclusions

- It is concluded from this due diligence study that the proposed infrastructure improvement program does not have issues of land acquisition and resettlement / rehabilitation. All facilities will be built on Government land, and procurement of NOCs & MOUs in process.

- In case any claims or complaints are to be submitted during the construction period, an effective and efficient Grievance Redress Mechanism will enhance provision of timely and judicious hearings and facilitate solutions. Grievance Redressal Committee is in place and the office orders are attached in **Annexure 5 & 6.**

- During the construction phase IDIPT-HP will monitor the construction works in terms of any temporary/permanent impact, such as limitation of access to businesses or other livelihood resources etc. Any impact identified during construction works to be compensated based on the Land Acquisition and Resettlement Framework provisions.

Annexure 1 : List of Available Infrastructure

SN	Name of accommodation & location	Reservation by
1	Trekkers Hostel, Janjehli	Sr. Manager, Hotel Lake View Bilaspur Phone : 01978-224538
SN	**Name of Hotel/Guest House**	**Telephone No.**
1	Hotel Sandhya, Odidhar Near Janjehli	98162-96222
2	Royal Hotel & Restaurent, Lassi(Janjehli)	9805167333,9816804348
3	J M Harison Hotel, Katyandi	9418202145
SN	**Name of Home Stay**	**Telephone No.**
1	Shiva Home Stay, Pandavsheela (Janjehli)	98162-09181, 01907-256767
2	Jagdish Home Stay, Riyara (Janjehli)	01907-256765, 98164-51951
3	Kumar Home Stay, Janjehli	01907-256790, 98161-28640
4	Chaman Tara Home Stay, Keolinal (Janjehli)	01907-256536, 98161-01206
5	Mata Shikari Home Stay, Janjehli	01907-256726, 98163-56726
6	Om Home Stay, Janjehli	01907-256739, 96250-01200
7	Neeraj Home Stay, Odidhar (Janjehli)	01907-256529, 98053-90479
8	Shivalik Home Stay, Kataru	78070-75517
9	Dhrub Home Stay, Kutah	94186-40300, 98164-95304
10	Mount View Home Stay, Janjehli (Dasoundi)	94180-35220
11	Goldi Home Stay, Janjehli	96251-12947
12	Green Meadows Home Stay, Kataroo	94181-54936, 94182-86223
13	Apple Valley Home Stay, Majhakal (Janjehli)	98160-20718

Source : http://himachal.nic.in/index1.php?lang=1&dpt_id=199&level=1&sublinkid=12078&lid=12480 accessed on 12/01/2018

Annexure 2 : Concept Plan - Jhanjeli

Annexure 3: Involuntary Resettlement Checklist

Project Data

Country/ Project No./ Project Title		Infrastructure Development Investment Program for Tourism (IDIPT) – Tranche-3 Himachal Pradesh
Subproject title		Creation of Tourist Cultural Centre, Janjehli, Distt. Mandi
Project Executing Agency		Department of Tourism and Civil Aviation
Project Implementing Agency		Project Implementation Unit, Kullu
Modality		

[√] Project Loan [ ] Program Loan [ ] Financial Intermediary [ ] General Corporate Finance
[ ] Sector Loan [ ] MFF [ ] Emergency Assistance [ ] Grant
[ ] Other financing modalities:

IR Impact categorization [√] New [ ] Recategorization — Previous Category [ ]

[] **Category A:** Significant IR impact	(200+ persons (not households!) are physically displaced from residence or lose more than 10% of productive (income generating) assets
[ ] **Category B:** Non-significant IR impact	
[√] **Category C:** No IR impact	

Prepared by:

Social Development Specialist (Name, title, signature): Dr Basobi Sheel, Social Safeguard Specialist, DSC
Date:

For Project Implementing Agency (Name, title, signature): Mr. Rakesh Arora, Project Manager, PIU Kullu.
Date:

For Project Executing Agency (Name, title, signature): Mr. Manoj Sharma, Project Director, IDIPT-HP.
Date:

Probable Involuntary Resettlement Effects	**Yes**	**No**	**Not Known**	**Remarks**
Involuntary Acquisition of Land				
1. Will there be land acquisition?		√		The land is Government Land
2.Is the site for land acquisition known?		√		No Acquisition Required.
3. Is the ownership status and current usage of land to be acquired known?		√		No Acquisition Required

Probable Involuntary Resettlement Effects	Yes	No	Not Known	Remarks
4. Will easement be utilized within an existing Right of Way (ROW)?		√		The Plot is an independent Plot with access to main road.
5. Will there be loss of shelter and residential land due to land acquisition?		√		No residential building on Plot.
6. Will there be loss of agricultural and other productive assets due to land acquisition?		√		No
7. Will there be losses of crops, trees, and fixed assets due to land acquisition?		√		No
8. Will there be loss of businesses or enterprises due to land acquisition?		√		
9. Will there be loss of income sources and means of livelihoods due to land acquisition?		√		
Involuntary restrictions on land use or on access to legally designated parks and protected areas				
10.Will people lose access to natural resources, communal facilities and services?		√		
11.If land use is changed, will it have an adverse impact on social and economic activities?		√		
12.Will access to land and resources owned communally or by the state be restricted?		√		
Information on Displaced Persons:				
Any estimate of the likely number of persons that will be displaced by the Project?[√] No [] Yes If yes, approximately how many? _____				
Are any of them poor, female-heads of households, or vulnerable to poverty risks?[√] No [] Yes				
Are any displaced persons from indigenous or ethnic minority groups?[√] No [] Yes				

Source: ADB's IR Impact Categorization Checklist with screening questions filled with response from HPTDB-PMU PIU & Consultants.

Annexure 4: Indigenous Peoples Impact Checklist

Project Data	
Country/Project No./Project Title	Infrastructure Development Investment Program for Tourism (IDIPT) – Tranche-3 Himachal Pradesh
Subproject title	Creation of Tourist Cultural Centre, Janjehli, Distt. Mandi
Project Executing Agency	Department of Tourism and Civil Aviation
Project Implementing Agency	Project Implementation Unit, Kullu
Modality	
[√] Project Loan [ ] Program Loan [ ] Financial Intermediary [ ] General Corporate Finance [ ] Sector Loan[ ] MFF [ ] Emergency Assistance [ ] Grant [ ] Other financing modalities:	
IP Impact categorization [√] New [ ] Re-categorization — Previous Category [ ]	
Category A: Significant IP impact	
Category B: Non-significant IP impact	
Category C: No IP impact √	
Subproject requires the broad community support of affected Indigenous Peoples communities	**[ ]**Yes **[ ]**No
Prepared by:	
Social Development Specialist (Name, title, signature): Dr Basobi Sheell, Social safeguard Specialist, PMC Date:	
For Project Implementing Agency (Name, title, signature): Mr. Rakesh Arora, Project Manager, PIU Kullu. Date:	
For Project Executing Agency (Name, title, signature): Mr. Manoj Sharma, Project Director, IDIPT-HP. Date:	

KEY CONCERNS (Please provide elaborations on the Remarks column)	**YES**	**NO**	**NOT KNOWN**	**Remarks**
A. Indigenous Peoples Identification				
1. Are there socio-cultural groups present in or use the project area who may be considered as "tribes" (hill tribes, schedules tribes, tribal peoples), "minorities" (ethnic or national minorities), or "indigenous communities" in the project area?		√		
2.Are there national or local laws or policies as well as anthropological researches/studies that consider these groups present in or using the project area as belonging to "ethnic minorities", scheduled tribes, tribal peoples, national minorities, or cultural communities?		√		
3. Do such groups self-identify as being part of a distinct social and cultural group?		√		
4. Do such groups maintain collective attachments to distinct habitats or ancestral territories and/or to the natural resources in these habitats and territories?		√		

KEY CONCERNS (Please provide elaborations on the Remarks column)	YES	NO	NOT KNOWN	Remarks
5. Do such groups maintain cultural, economic, social, and political institutions distinct from the dominant society and culture?		√		
6. Do such groups speak a distinct language or dialect?		√		
7. Has such groups been historically, socially and economically marginalized, disempowered, excluded, and/or discriminated against?		√		
8.Are such groups represented as "Indigenous Peoples" or as "ethnic minorities" or "scheduled tribes" or "tribal populations" in any formal decision-making bodies at the national or local levels?		√		
B.Identification of Potential Impacts				
9.Will the project directly or indirectly benefit or target Indigenous Peoples?		√		
10.Will the project directly or indirectly affect Indigenous Peoples' traditional socio-cultural and belief practices? (e.g. child-rearing, health, education, arts, and governance)		√		
11.Will the project affect the livelihood systems of Indigenous Peoples? (e.g., food production system, natural resource management, crafts and trade, employment status)		√		
12.Will the project be in an area (land or territory) occupied, owned, or used by Indigenous Peoples, and/or claimed as ancestral domain?		√		
C. Identification of Special Requirements *Will the project activities include:*		√		
13. Commercial development of the cultural resources and knowledge of Indigenous Peoples?		√		
14. Physical displacement from traditional or customary lands?		√		
15.Commercial development of natural resources (such as minerals, hydrocarbons, forests, water, hunting or fishing grounds) within customary lands under use that would impact the livelihoods or the cultural, ceremonial, spiritual uses that define the identity and community of Indigenous Peoples?		√		
16.Establishing legal recognition of rights to lands and territories that are traditionally owned or customarily used, occupied or claimed by indigenous peoples?		√		
17.Acquisition of lands that are traditionally owned or customarily used, occupied or claimed by indigenous peoples?		√		

Anticipated project impacts on Indigenous Peoples

Project component/activity/ output	Anticipated positive effect	Anticipated negative effect
LIST ALL PROJECT COMPONENTS / ACTIVITIES / OUTPUTS HERE	**---- INDICATE EFFECTS TO IPSOR PUT N/A AS NECESSARY**	
Creation of Tourist Cultural Centre, Janjehli, Distt. Mandi	**N/A**	**N/A**

Annexure 5: Office orders of GRC set-up at PMU level

(ADB Loan No. 2676-IND)
Himachal Pradesh Tourism Development Board,
Department of Tourism and Civil Aviation, Himachal Pradesh.
PMU Office U. S. Club, Shimla-1.

TEL (0177)2659962. Fax. (0177) 2659925.

No: IDIPT-HP/2676-IND/GRC-PMU/2013-326-52 Dated: 2nd May, 2013.

OFFICE ORDER

Following Grievance Redress Committee (PMU, IDIPT-HP) has been constituted for the registration of grievances/complaints/suggestions/ comments/questions/ feedback etc. of the general public on the IDIPT-HP projects (ADB Loan No. 2676-IND) and further reviewing/recommending appropriate action on the same to the competent authority:-

1. Executive Engineer, PMU, IDIPT-HP.
2. Community Development Officer, PMU, IDIPT-HP.
3. Deputy Director (Tourism), Shimla Division.
4. Representative of Line Agency, IDIPT-HP Projects.
5. Environment Safeguard Specialist, PMC.

D/C
Mission Director
IDIPT-HP, Shimla.
Dated: 2nd May, 2013.

Endst. No. As above.
Copy to the following along with a Grievance Registration Form for information and necessary action please:-

1. The Principal Secretary (Tourism) to the Govt. of HP, Shimla-2.
2. All the Deputy Commissioners in HP.
3. The Commissioner, MC, Shimla.
4. All the concerned members of the above Committee for initiating further necessary action at their level.
5. Executive Engineer, PIU, IDIPT-HP, Shimla.
6. Junior Engineers, PMU/PIU, IDIPT-HP, Shimla/ Kangra.
7. Team Leaders, PMC/ DSC.

D/C
Mission Director
IDIPT-HP, Shimla.

PMU

Infrastructure Development Investment Program for Tourism
(ADB Loan No. 2676-IND.)
Himachal Pradesh Tourism Development Board
Department of Tourism and Civil Aviation, Himachal Pradesh,
PMU Office U. S. Club, Shimla-1.

TEL (0177)2659962. **Fax. (0177)2659925.**
No.: IDIPT-HP/3223-IND/GRC-PIU /2015- 647 - 670 **Dated:** 09.05.2016.

Office Order

In supersession of this office order No. IDIPT-HP/2676-IND/GRC-PMU/2013-326-52 dated 02.05.2013 wherein the Grievance Redress Committee (PMU, IDIPT-HP) has been constituted for the registration of grievances/ complaints/ suggestions/ comments/ questions/ feedback etc. of the general public on the IDIPT-HP projects (ADB Loan No. 2676-IND). Now the said committee is re-structured as under for the registration of grievances/ complaints/ suggestions/ comments/ questions/ feedback etc. of the general public on the IDIPT-HP projects under Loan No.2676-IND as well as Loan No. 3223-IND and further reviewing/recommending appropriate action on the same to the competent authority:-

1. The Technical Consultant, PMU, IDIPT-HP.
2. The Executive Engineer, PMU, IDIPT-HP.
3. The Community Development Officer, PMU, IDIPT-HP.
4. The Deputy Director (Tourism), Shimla Division.
5. The Representative of Line Agencies, IDIPT-HP Projects in HP.
6. The Safeguard Specialists, PMU/PMC/DSC, Shimla.

Commissioner (Tourism)-cum-
Mission Director,
IDIPT-HP

Endst. No. As above. **Dated:** 09.05.2016.

Copy to the following alongwith a Grievance Registration Form and Grievance Redress Mechanism for information and necessary action please:

1. The Additional Chief Secretary (Tourism), to the Govt. of H.P., Shimla-2.
2. All the Deputy Commissioner in H.P.
3. All the Deputy Directors (Tourism) in HP.
4. The Commissioner, Municipal Corporation Shimla
5. All the concerned members of the above Committee for initiating further necessary action at their level.
6. The Technical Consultant, PMU, IDIPT-HP, U. S. Club, Shimla.
7. The Executive Engineer, PMU, IDIPT-HP, U. S. Club, Shimla.
8. The Team Leader, PMC/DSC, IDIPT-HP.

Received 10/5/16. Received 10/5/16.

Commissioner (Tourism)-cum-
Mission Director,
IDIPT-HP

Annexure 6: Office orders of GRC set-up at PIU, Kullu level

No.: IDIPT-HP/3223-IND/GRC-PIU /2015- **Dated: 09.04.2016.**

Office Order

In supersession of this office order No. IDIPT-HP/2676-IND/GRC-PIU/2015-1023-47 dated 24.06.2015 wherein the Grievance Redress Committee (PIU, Kullu, IDIPT-HP) has been constituted for the registration of grievances/ complaints/ suggestions/ comments/ questions/ feedback etc. of the general public on the IDIPT-HP projects (ADB Loan No. 2676-IND). Now the said committee is re-structured for the registration of grievances/ complaints/ suggestions/ comments/ questions/ feedback etc. of the general public on the IDIPT-HP projects under ADB Loan No. 2676-IND as well as Loan No. 3223-IND and further reviewing/recommending appropriate action on the same to the competent authority as following:

1. The Project Manager, PIU, IDIPT-HP, Kullu.
2. The Deputy Director (Tourism), Kullu at Manali, HP.
3. The Community Development Officer, PMU/PIU, IDIPT-HP.
4. Representative of Line Agency, IDIPT-HP Projects.
5. The Safeguard Specialist, PMU/PMC/DSC.

Commissioner (Tourism)-cum-
Mission Director,
IDIPT-HP
Dated: 09 .04.2016.

Endst. No. As above. 633

Copy to the following alongwith a Grievance Registration Form and Grievance Redress Mechanism for information and necessary action please:

1. The Additional Chief Secretary (Tourism), to the Govt. of H.P., Shimla-2.
2. All the Deputy Commissioner in H.P.
3. All the concerned members of the above committee.
4. The Technical Consultant, PMU, IDIPT-HP, Shima.
5. The Executive Engineer, PMU, IDIPT-HP Shimla.
6. The Project Manager, PIU, IDIPT-HP, Kullu. HP. He is directed to install a box for Loan No. 3223-IND as did for Loan No. 2676-IND.
7. The Team Leader, PMC/DSC, IDIPT-HP.

Annexure 7: Consultations with Stakeholders

Place of Consultation: Proposed work site at Dhim Kataru Panchayat, Janjehli, Village Market Area, Residences managing Home Stay.

Date: 2nd March 2018

Participants involved in Consultation: Horticulture Dept. Officials, Caretaker – Trekker Hostel, Shopkeepers, Taxi Operators, Householders.

Implementers: Dr. Basobi Sheel, Social Safeguards Specialist & Mr. Saquib Qadri, Environment Safeguards Specialist of PMC.

Issues Covered:

- Awareness about the project and its components to the locals.
- Information about the sub-project location, and their agreement therein.
- Any requirement of additional development works in & around the area.

Consultation Outcome:

- Project's major components were well accepted & appreciated by the local community.
- They agreed that the sub-components suggested are much needed in the area.
- They were informed that as per the initial assessment there will be no resettlement & rehabilitation issues.
- Additional requirements were suggested by locals:
    - The area has scenic beauty, trekking path & an ancient period tem-le of Mata Shakari. Trekking path starts from Janjehli tto Buda Kedar to Shikari Mata to Bulha – it may take 2-3 days, the stretch needs water & toilet facilities along with rest shelters.
    - The area needs to have more tourist attracting activities, more sports/ adventure tourism etc.
    - Homestays are common source of alternate income among the locals, there are around 10-15 home stay arrangements.
    - The area needs roads improvement to attract more tourists.
    - The area needs bus stops at strategic locations.
    - The area does not have street lights, street lamps required to be installed.
    - There are no public toilets, which is a major problem in the area.
    - The area needs to have proper signages indicating public utilities & available amenities.
    - Locals suggested establishing institutions for imparting technical skills to the local youths.
    - SHGs need to be strengthened, they need awareness & skill improvement programs.
    - There is over production of apples, these could be processed, developed into products & marketed. SNGs could be involved in this.
    - An old temple of *Kamru Nag Devta,* adjacent to the site needs minor renovation.
    - Janjehli does not have very good health facilities, the complex could provide the same catering to tourists' demand.
    - Camping sites can be developed to attract more tourists.
    - Cottages may be built instead of concrete hotel structures.

- From Janjehli one could reach Shimla covering a distance of 130 kms. only via Karsong – Churag – Chindi - Taptapani to Shimla provided the road is developed. This will make movements much easier & attract more tourists.

Photographs of Consultation

<table>
<tr><td> </td><td> </td></tr>
<tr><td>Consultation with Local People</td><td>Consultation with Local Women</td></tr>
<tr><td> </td><td> </td></tr>
<tr><td>Consultation with Home Stay Owner</td><td>Consultation with Villager</td></tr>
<tr><td> </td><td> </td></tr>
<tr><td>Consultation at Market Area</td><td>Transect Walk in & around the Site</td></tr>
</table>

Attendance Sheet

Name of Sub-project IDIPT

Venue Creation of Tourist Culture Centre, Janje

Date 1/3/18

1.	Bihari Lal	Horticulture incharge	94184-67985	[signature]
2.	Murari Lal	Beldar	98054-50949	[signature]
3.	Sanjay	Beldar	9805-362294	[signature]
4.	Utam Singh	farmer	98052-95081	[signature]
5.	Uday Kumar	farmer	88942-11730	[signature]
6.	Ghan Shyam	"	98056-66436	Ghan Shyam
7.	Mand Lal	Tracker Hostel care taker	98172-12090	[signature]
8.	Bhuma devi	Farmer	98167-11042	[signature]
9.	Kamla devi	"	98169-37366	[signature]
10.	Jawhal Lal	farmer	88949-21870	[signature]
11.	Chunu devi	farmer	—	
12.	Ganga devi	farmer	—	[signature]
13.	Drompati devi	farmer (Home stay)	9816519287	[signature]
14.	Jai Kumar	"	"	[signature]
15.	Pawan	Shopkeper	98155-10010	[signature]
16.	Pren Sing	farmer	8894426525	[signature]
17.	Balder Kandal	farmer	9816353731	[signature]
18.	Raj Kumar	BPO	98051-21526	[signature]
19.	Deep Kumar	Shopkeper	89889 59056	[signature]
20.	Het Ram	Taxi operator	8622-8817699	[signature]
21.	Gopal	farmer	7804485087	[signature]
22.	Gagan	farmer	78339-88532	[signature]
23.	Rohit Sharma	Business	7807207578	[signature]

Section 7

General Conditions of Contract (GCC)

Blank Page

Conditions of Contract

for Construction

MULTILATERAL DEVELOPMENT BANK HARMONISED EDITION

GENERAL CONDITIONS

June 2010

For Participating Bank use only

Released 30 June 2010

COPYRIGHT FIDIC 2010

FEDERATION INTERNATIONALE DES INGENIEURS-CONSEILS
INTERNATIONAL FEDERATION OF CONSULTING ENGINEERS
INTERNATIONALE VEREINIGUNG BERATENDER INGENIEURE
FEDERACION INTERNACIONAL DE INGENIEROS CONSULTORES

General Conditions

CONTENTS

1 General Provisions

1.1 Definitions

1.2 Interpretation

1.3 Communications

1.4 Law and Language

1.5 Priority of Documents

1.6 Contract Agreement

1.7 Assignment

1.8 Care and Supply of Documents

1.9 Delayed Drawings or Instructions

1.10 Employer's Use of Contractor's Documents

1.11 Contractor's Use of Employer's Documents

1.12 Confidential Details

1.13 Compliance with Laws

1.14 Joint and Several Liability

1.15 Inspections and Audit by the Bank

2 The Employer

2.1 Right of Access to the Site

2.2 Permits, Licences or Approvals

2.3 Employer's Personnel

2.4 Employer's Financial Arrangements

2.5 Employer's Claims

3 The Engineer

3.1 Engineer's Duties and Authority

3.2 Delegation by the Engineer

3.3 Instructions of the Engineer

3.4 Replacement of the Engineer

3.5 Determinations

4 The Contractor

4.1 Contractor's General Obligations

4.2 Performance Security

4.3 Contractor's Representative

4.4 Subcontractors

4.5 Assignment of Benefit of Subcontract

4.6 Co-operation

4.7 Setting Out

4.8 Safety Procedures

4.9 Quality Assurance

4.10 Site Data

4.11 Sufficiency of the Accepted Contract Amount

4.12 Unforeseeable Physical Conditions

4.13 Rights of Way and Facilities

4.14 Avoidance of Interference

4.15 Access Route

4.16 Transport of Goods

4.17 Contractor's Equipment

4.18 Protection of the Environment

4.19 Electricity, Water and Gas

4.20 Employer's Equipment and Free-Issue Materials

4.21 Progress Reports

4.22 Security of the Site

4.23 Contractor's Operations on Site

4.24 Fossils

5 Nominated Subcontractors

5.1 Definition of “nominated Subcontractor”

5.2 Objection to Nomination

5.3 Payments to nominated Subcontractors

5.4 Evidence of Payments

6 Staff and labour

6.1 Engagement of Staff and Labour

6.2 Rates of Wages and Conditions of Labour
6.3 Persons in the Service of Employer
6.4 Labour Laws
6.5 Working Hours
6.6 Facilities for Staff and Labour
6.7 Health and Safety
6.8 Contractor's Superintendence
6.9 Contractor's Personnel
6.10 Records of Contractor's Personnel and Equipment
6.11 Disorderly Conduct
6.12 Foreign Personnel
6.13 Supply of Foodstuffs
6.14 Supply of Water
6.15 Measures against Insect and Pest Nuisance
6.16 Alcoholic Liquor or Drugs
6.17 Arms and Ammunition
6.18 Festival and Religious Customs
6.19 Funeral Arrangements
6.20 Forced Labour
6.21 Child Labour
6.22 Employment Records of Workers
6.23 Workers' Organisations
6.24 Non-Discrimination and Equal Opportunity

7 Plant, Materials and Workmanship

7.1 Manner of Execution
7.2 Samples
7.3 Inspection
7.4 Testing
7.5 Rejection
7.6 Remedial Work
7.7 Ownership of Plant and Materials
7.8 Royalties

8 Commencement, Delays and Suspension

8.1 Commencement of Works
8.2 Time for Completion
8.3 Programme
8.4 Extension of Time for Completion
8.5 Delays Caused by Authorities
8.6 Rate of Progress
8.7 Delay Damages
8.8 Suspension of Work
8.9 Consequences of Suspension
8.10 Payment for Plant and Materials in Event of Suspension
8.11 Prolonged Suspension
8.12 Resumption of Work

9 Tests on Completion

9.1 Contractor's Obligations
9.2 Delayed Tests
9.3 Retesting
9.4 Failure to Pass Tests on Completion

10 Employer's Taking Over

10.1 Taking Over of the Works and Sections
10.2 Taking Over of Parts of the Works
10.3 Interference with Tests on Completion
10.4 Surfaces Requiring Reinstatement

11 Defects Liability

11.1 Completion of Outstanding Work and Remedying Defects
11.2 Cost of Remedying Defects
11.3 Extension of Defects Notification Period
11.4 Failure to Remedy Defects
11.5 Removal of Defective Work
11.6 Further Tests
11.7 Right of Access
11.8 Contractor to Search
11.9 Performance Certificate

11.10 Unfulfilled Obligations
11.11 Clearance of Site

12 Measurement and Evaluation

12.1 Works to be Measured
12.2 Method of Measurement
12.3 Evaluation
12.4 Omissions

13 Variations and Adjustments

13.1 Right to Vary
13.2 Value Engineering
13.3 Variation Procedure
13.4 Payment in Applicable Currencies
13.5 Provisional Sums
13.6 Daywork
13.7 Adjustments for Changes in Legislation
13.8 Adjustments for Changes in Cost

14 Contract Price and Payment

14.1 The Contract Price
14.2 Advance Payment
14.3 Application for Interim Payment Certificates
14.4 Schedule of Payments
14.5 Plant and Materials intended for the Works
14.6 Issue of Interim Payment Certificates
14.7 Payment
14.8 Delayed Payment
14.9 Payment of Retention Money
14.10 Statement at Completion
14.11 Application for Final Payment Certificate
14.12 Discharge
14.13 Issue of Final Payment Certificate
14.14 Cessation of Employer's Liability
14.15 Currencies of Payment

15 Termination by Employer

15.1 Notice to Correct

15.2 Termination by Employer

15.3 Valuation at Date of Termination

15.4 Payment after Termination

15.5 Employer's Entitlement to Termination for Convenience

15.6 Corrupt and Fraudulent Practices

16 Suspension and Termination by Contractor

16.1 Contractor's Entitlement to Suspend Work

16.1 Termination by Contractor

16.3 Cessation of Work and Removal of Contractor's Equipment

16.4 Payment on Termination

17 Risk and Responsibility

17.1 Indemnities

17.2 Contractor's Care of the Works

17.3 Employer's Risks

17.4 Consequences of Employer's Risks

17.5 Intellectual and Industrial Property Rights

17.6 Limitation of Liability

17.7 Use of Employer’s Facilities/Accommodation

18 Insurance

18.1 General Requirements for Insurances

18.2 Insurance for Works and Contractor's Equipment

18.3 Insurance against Injury to Persons and Damage to Property

18.4 Insurance for Contractor's Personnel

19 Force Majeure

19.1 Definition of Force Majeure

19.2 Notice of Force Majeure

19.3 Duty to Minimise Delay

19.4 Consequences of Force Majeure

19.5 Force Majeure Affecting Subcontractor

19.6 Optional Termination, Payment and Release

19.7 Release from Performance

20 Claims, Disputes and Arbitration

20.1 Contractor's Claims

20.2 Appointment of the Dispute Board

20.3 Failure to Agree of the Composition of the Dispute Board

20.4 Obtaining Dispute Board's Decision

20.5 Amicable Settlement

20.6 Arbitration

20.7 Failure to Comply with Dispute Board's Decision

20.8 Expiry of Dispute Board's Appointment

APPENDIX: GENERAL CONDITIONS OF DISPUTE BOARD AGREEMENT

General Conditions

1 General Provisions

1.1 Definitions

In the Conditions of Contract ("these Conditions"), which include Particular Conditions, Parts A and B, and these General Conditions, the following words and expressions shall have the meanings stated. Words indicating persons or parties include corporations and other legal entities, except where the context requires otherwise.

1.1.1 The Contract

1.1.1.1 "Contract" means the Contract Agreement, the Letter of Acceptance, the Letter of Tender, these Conditions, the Specification, the Drawings, the Schedules, and the further documents (if any) which are listed in the Contract Agreement or in the Letter of Acceptance.

1.1.1.2 "Contract Agreement" means the contract agreement referred to in Sub-Clause 1.6 [Contract Agreement].

1.1.1.3 "Letter of Acceptance" means the letter of formal acceptance, signed by the Employer, of the Letter of Tender, including any annexed memoranda comprising agreements between and signed by both Parties. If there is no such letter of acceptance, the expression "Letter of Acceptance" means the Contract Agreement and the date of issuing or receiving the Letter of Acceptance means the date of signing the Contract Agreement.

1.1.1.4 "Letter of Tender" means the document entitled letter of tender or letter of bid, which was completed by the Contractor and includes the signed offer to the Employer for the Works.

1.1.1.5 "Specification" means the document entitled specification, as included in the Contract, and any additions and modifications to the specification in accordance with the Contract. Such document specifies the Works.

1.1.1.6 "Drawings" means the drawings of the Works, as included in the Contract, and any additional and modified drawings issued by (or on behalf of) the Employer in accordance with the Contract.

1.1.1.7 "Schedules" means the document(s) entitled schedules, completed by the Contractor and submitted with the Letter of Tender, as included in the Contract. Such document may include the Bill of Quantities, data, lists, and schedules of rates and/or prices.

1.1.1.8 "Tender" means the Letter of Tender and all other documents which the Contractor submitted with the Letter of Tender, as included in the Contract.

1.1.1.9 "Bill of Quantities", "Daywork Schedule" and "Schedule of Payment Currencies" mean the documents so named (if any) which are comprised in the Schedules.

1.1.1.10 "Contract Data" means the pages completed by the Employer entitled contract data which constitute Part A of the Particular Conditions.

1.1.2 Parties and Persons

1.1.2.1 "Party" means the Employer or the Contractor, as the context requires.

COPYRIGHT FIDIC JUNE 2010

1.1.2.2 "Employer" means the person named as employer in the Contract Data and the legal successors in title to this person.

1.1.2.3 "Contractor" means the person(s) named as contractor in the Letter of Tender accepted by the Employer and the legal successors in title to this person(s).

1.1.2.4 "Engineer" means the person appointed by the Employer to act as the Engineer for the purposes of the Contract and named in the Contract Data, or other person appointed from time to time by the Employer and notified to the Contractor under Sub-Clause 3.4 [Replacement of the Engineer].

1.1.2.5 "Contractor's Representative" means the person named by the Contractor in the Contract or appointed from time to time by the Contractor under Sub-Clause 4.3 [Contractor's Representative], who acts on behalf of the Contractor.

1.1.2.6 "Employer's Personnel" means the Engineer, the assistants referred to in Sub-Clause 3.2 [Delegation by the Engineer] and all other staff, labour and other employees of the Engineer and of the Employer; and any other personnel notified to the Contractor, by the Employer or the Engineer, as Employer's Personnel.

1.1.2.7 "Contractor's Personnel" means the Contractor's Representative and all personnel whom the Contractor utilises on Site, who may include the staff, labour and other employees of the Contractor and of each Subcontractor; and any other personnel assisting the Contractor in the execution of the Works.

1.1.2.8 "Subcontractor" means any person named in the Contract as a subcontractor, or any person appointed as a subcontractor, for a part of the Works; and the legal successors in title to each of these persons.

1.1.2.9 "DB" means the person or three persons appointed under Sub-Clause 20.2 [Appointment of the Dispute Board] or Sub-Clause 20.3 [Failure to Agree on the Composition of the Dispute Board]

1.1.2.10 "FIDIC" means the Fédération Internationale des Ingénieurs-Conseils, the international federation of consulting engineers.

1.1.2.11 "Bank" means the financing institution (if any) named in the Contract Data.

1.1.2.12 "Borrower" means the person (if any) named as the borrower in the Contract Data.

1.1.3 Dates, Tests, Periods and Completion

1.1.3.1 "Base Date" means the date 28 days prior to the latest date for submission of the Tender.

1.1.3.2 "Commencement Date" means the date notified under Sub-Clause 8.1 [Commencement of Works].

1.1.3.3 "Time for Completion" means the time for completing the Works or a Section (as the case may be) under Sub-Clause 8.2 [Time for Completion], as stated in the Contract Data (with any extension under Sub-Clause 8.4 [Extension of Time for Completion]), calculated from the Commencement Date.

1.1.3.4 "Tests on Completion" means the tests which are specified in the Contract or agreed by both Parties or instructed as a Variation, and which are carried out under Clause 9 [Tests on Completion] before the Works or a Section (as the case may be) are taken over by the Employer.

1.1.3.5 "Taking-Over Certificate" means a certificate issued under Clause 10 [Employer's Taking Over].

1.1.3.6 "Tests after Completion" means the tests (if any) which are specified in the Contract and which are carried out in accordance with the Specification after the Works or a Section (as the case may be) are taken over by the Employer.

1.1.3.7 "Defects Notification Period" means the period for notifying defects in the Works or a Section (as the case may be) under Sub-Clause 11.1 [Completion of Outstanding Work and Remedying Defects], which extends over 365 days except if otherwise stated in the Contract Data (with any extension under Sub-Clause 11.3 [Extension of Defects Notification Period]), calculated from the date on which the Works or Section is completed as certified under Sub-Clause 10.1 [Taking Over of the Works and Sections].

1.1.3.8 "Performance Certificate" means the certificate issued under Sub-Clause 11.9 [Performance Certificate].

1.1.3.9 "day" means a calendar day and "year" means 365 days.

1.1.4 Money and Payments

1.1.4.1 "Accepted Contract Amount" means the amount accepted in the Letter of Acceptance for the execution and completion of the Works and the remedying of any defects.

1.1.4.2 "Contract Price" means the price defined in Sub-Clause 14.1 [The Contract Price], and includes adjustments in accordance with the Contract.

1.1.4.3 "Cost" means all expenditure reasonably incurred (or to be incurred) by the Contractor, whether on or off the Site, including overhead and similar charges, but does not include profit.

1.1.4.4 "Final Payment Certificate" means the payment certificate issued under Sub-Clause 14.13 [Issue of Final Payment Certificate].

1.1.4.5 "Final Statement" means the statement defined in Sub-Clause 14.11 [Application for Final Payment Certificate].

1.1.4.6 "Foreign Currency" means a currency in which part (or all) of the Contract Price is payable, but not the Local Currency.

1.1.4.7 "Interim Payment Certificate" means a payment certificate issued under Clause 14 [Contract Price and Payment], other than the Final Payment Certificate.

1.1.4.8 "Local Currency" means the currency of the Country.

1.1.4.9 "Payment Certificate" means a payment certificate issued under Clause 14 [Contract Price and Payment].

1.1.4.10 "Provisional Sum" means a sum (if any) which is specified in the Contract as a provisional sum, for the execution of any part of the Works or for the supply of Plant, Materials or services under Sub-Clause 13.5 [Provisional Sums].

1.1.4.11 "Retention Money" means the accumulated retention moneys which the Employer retains under Sub-Clause 14.3 [Application for Interim Payment Certificates] and pays under Sub-Clause 14.9 [Payment of Retention Money].

1.1.4.12 "Statement" means a statement submitted by the Contractor as part of an application, under Clause 14 [Contract Price and Payment], for a payment certificate.

1.1.5 Works and Goods

1.1.5.1 "Contractor's Equipment" means all apparatus, machinery, vehicles and other things required for the execution and completion of the Works and the remedying of any defects. However, Contractor's Equipment excludes Temporary Works, Employer's Equipment (if any), Plant, Materials and any other things intended to form or forming part of the Permanent Works.

1.1.5.2 "Goods" means Contractor's Equipment, Materials, Plant and Temporary Works, or any of them as appropriate.

1.1.5.3 "Materials" means things of all kinds (other than Plant) intended to form or forming part of the Permanent Works, including the supply-only materials (if any) to be supplied by the Contractor under the Contract.

1.1.5.4 "Permanent Works" means the permanent works to be executed by the Contractor under the Contract.

1.1.5.5 "Plant" means the apparatus, machinery and other equipment intended to form or forming part of the Permanent Works, including vehicles purchased for the Employer and relating to the construction or operation of the Works.

1.1.5.6 "Section" means a part of the Works specified in the Contract Data as a Section (if any).

1.1.5.7 "Temporary Works" means all temporary works of every kind (other than Contractor's Equipment) required on Site for the execution and completion of the Permanent Works and the remedying of any defects.

1.1.5.8 "Works" mean the Permanent Works and the Temporary Works, or either of them as appropriate.

1.1.6 Other Definitions

1.1.6.1 "Contractor's Documents" means the calculations, computer programs and other software, drawings, manuals, models and other documents of a technical nature (if any) supplied by the Contractor under the Contract.

1.1.6.2 "Country" means the country in which the Site (or most of it) is located, where the Permanent Works are to be executed.

1.1.6.3 "Employer's Equipment" means the apparatus, machinery and vehicles (if any) made available by the Employer for the use of the Contractor in the execution of the Works, as stated in the Specification; but does not include Plant which has not been taken over by the Employer.

1.1.6.4 "Force Majeure" is defined in Clause 19 [Force Majeure].

1.1.6.5 "Laws" means all national (or state) legislation, statutes, ordinances and other laws, and regulations and by-laws of any legally constituted public authority.

1.1.6.6 "Performance Security" means the security (or securities, if any) under Sub-Clause 4.2 [Performance Security].

1.1.6.7 "Site" means the places where the Permanent Works are to be executed, including storage and working areas, and to which Plant and Materials are to be delivered, and any other places as may be specified in the Contract as forming part of the Site.

1.1.6.8 "Unforeseeable" means not reasonably foreseeable by an experienced contractor by the Base Date.

1.1.6.9 "Variation" means any change to the Works, which is instructed or approved as a variation under Clause 13 [Variations and Adjustments].

1.1.6.10 “Notice of Dissatisfaction” means the notice given by either Party to the other under Sub-Clause 20.4 [Obtaining Dispute Board’s Decision] indicating its dissatisfaction and intention to commence arbitration.

1.2 Interpretation

In the Contract, except where the context requires otherwise

(a) words indicating one gender include all genders;

(b) words indicating the singular also include the plural and words indicating the plural also include the singular;

(c) provisions including the word “agree”, “agreed” or “agreement” require the agreement to be recorded in writing;

(d) “written” or “in writing” means hand-written, type-written, printed or electronically made, and resulting in a permanent record;

(e) the word “tender” is synonymous with “bid” and “tenderer” with “bidder” and the words “tender documents” with “bidding documents”.

The marginal words and other headings shall not be taken into consideration in the interpretation of these Conditions.

In these Conditions, provisions including the expression "Cost plus profit" require this profit to be one-twentieth (5%) of this Cost unless otherwise indicated in the Contract Data.

1.3 Communications

Wherever these Conditions provide for the giving or issuing of approvals, certificates, consents, determinations, notices, requests and discharges, these communications shall be:

(a) in writing and delivered by hand (against receipt), sent by mail or courier, or transmitted using any of the agreed systems of electronic transmission as stated in the Contract Data; and

(b) delivered, sent or transmitted to the address for the recipient’s communications as stated in the Contract Data. However:

(i) if the recipient gives notice of another address, communications shall thereafter be delivered accordingly; and

(ii) if the recipient has not stated otherwise when requesting an approval or consent, it may be sent to the address from which the request was issued.

Approvals, certificates, consents and determinations shall not be unreasonably withheld or delayed. When a certificate is issued to a Party, the certifier shall send a copy to the other Party. When a notice is issued to a Party, by the other Party or the Engineer, a copy shall be sent to the Engineer or the other Party, as the case may be.

1.4 Law and Language

The Contract shall be governed by the law of the country or other jurisdiction stated in the Contract Data.

The ruling language of the Contract shall be that stated in the Contract Data.

The language for communications shall be that stated in the Contract Data. If no language is stated there, the language for communications shall be the ruling language of the Contract.

1.5 Priority of Documents

The documents forming the Contract are to be taken as mutually explanatory of one another. For the purposes of interpretation, the priority of the documents shall be in accordance with the following sequence:

(a) the Contract Agreement (if any),

(b) the Letter of Acceptance,

(c) the Letter of Tender,

(d) the Particular Conditions – Part A,

(e) the Particular Conditions – Part B,

(f) these General Conditions,

(g) the Specification,

(h) the Drawings, and

(i) the Schedules and any other documents forming part of the Contract.

If an ambiguity or discrepancy is found in the documents, the Engineer shall issue any necessary clarification or instruction.

1.6 Contract Agreement

The Parties shall enter into a Contract Agreement within 28 days after the Contractor receives the Letter of Acceptance, unless the Particular Conditions establish otherwise. The Contract Agreement shall be based upon the form annexed to the Particular Conditions. The costs of stamp duties and similar charges (if any) imposed by law in connection with entry into the Contract Agreement shall be borne by the Employer.

1.7 Assignment

Neither Party shall assign the whole or any part of the Contract or any benefit or interest in or under the Contract. However, either Party:

(a) may assign the whole or any part with the prior agreement of the other Party, at the sole discretion of such other Party, and

(b) may, as security in favour of a bank or financial institution, assign its right to any moneys due, or to become due, under the Contract.

1.8 Care and Supply of Documents

The Specification and Drawings shall be in the custody and care of the Employer. Unless otherwise stated in the Contract, two copies of the Contract and of each subsequent Drawing shall be supplied to the Contractor, who may make or request further copies at the cost of the Contractor.

Each of the Contractor's Documents shall be in the custody and care of the Contractor, unless and until taken over by the Employer. Unless otherwise stated in the Contract, the Contractor shall supply to the Engineer six copies of each of the Contractor's Documents.

The Contractor shall keep, on the Site, a copy of the Contract, publications named in the Specification, the Contractor's Documents (if any), the Drawings and Variations and other communications given under the Contract. The Employer's Personnel shall have the right of access to all these documents at all reasonable times.

If a Party becomes aware of an error or defect in a document which was prepared for use in executing the Works, the Party shall promptly give notice to the other Party of such error or defect.

1.9 Delayed Drawings or Instructions

The Contractor shall give notice to the Engineer whenever the Works are likely to be delayed or disrupted if any necessary drawing or instruction is not issued to the Contractor within a particular time, which shall be reasonable. The notice shall include details of the necessary drawing or instruction, details of why and by when it should be issued, and the nature and amount of the delay or disruption likely to be suffered if it is late.

If the Contractor suffers delay and/or incurs Cost as a result of a failure of the Engineer to issue the notified drawing or instruction within a time which is reasonable and is specified in the notice with supporting details, the Contractor shall give a further notice to the Engineer and shall be entitled subject to Sub-Clause 20.1 [Contractor's Claims] to:

(a) an extension of time for any such delay, if completion is or will be delayed, under Sub-Clause 8.4 [Extension of Time for Completion], and

(b) payment of any such Cost plus profit, which shall be included in the Contract Price.

After receiving this further notice, the Engineer shall proceed in accordance with Sub-Clause 3.5 [Determinations] to agree or determine these matters.

However, if and to the extent that the Engineer's failure was caused by any error or delay by the Contractor, including an error in, or delay in the submission of, any of the Contractor's Documents, the Contractor shall not be entitled to such extension of time, Cost or profit.

1.10 Employer's Use of Contractor's Documents

As between the Parties, the Contractor shall retain the copyright and other intellectual property rights in the Contractor's Documents and other design documents made by (or on behalf of) the Contractor.

The Contractor shall be deemed (by signing the Contract) to give to the Employer a non-terminable transferable non-exclusive royalty-free licence to copy, use and communicate the Contractor's Documents, including making and using modifications of them. This licence shall:

(a) apply throughout the actual or intended working life (whichever is longer) of the relevant parts of the Works,

(b) entitle any person in proper possession of the relevant part of the Works to copy, use and communicate the Contractor's Documents for the purposes of completing, operating, maintaining, altering, adjusting, repairing and demolishing the Works, and

(c) in the case of Contractor's Documents which are in the form of computer programs and other software, permit their use on any computer on the Site and other places as envisaged by the Contract, including replacements of any computers supplied by the Contractor.

The Contractor's Documents and other design documents made by (or on behalf of) the Contractor shall not, without the Contractor's consent, be used, copied or communicated to a third party by (or on behalf of) the Employer for purposes other than those permitted under this Sub-Clause.

1.11 Contractor's Use of Employer's Documents

As between the Parties, the Employer shall retain the copyright and other intellectual property rights in the Specification, the Drawings and other documents made by (or on behalf of) the Employer. The Contractor may, at his cost, copy, use, and obtain communication of these documents for the purposes of the Contract. They shall not, without the Employer's consent, be copied, used or communicated to a third party by the Contractor, except as necessary for the purposes of the Contract.

1.12 Confidential Details

The Contractor's and the Employer's Personnel shall disclose all such confidential and other information as may be reasonably required in order to verify compliance with the Contract and allow its proper implementation.

Each of them shall treat the details of the Contract as private and confidential, except to the extent necessary to carry out their respective obligations under the Contract or to comply with applicable Laws. Each of them shall not publish or disclose any particulars of the Works prepared by the other Party without the previous agreement of the other Party. However, the Contractor shall be permitted to disclose any publicly available information, or information otherwise required to establish his qualifications to compete for other projects.

1.13 Compliance with Laws

The Contractor shall, in performing the Contract, comply with applicable Laws. Unless otherwise stated in the Particular Conditions:

(a) the Employer shall have obtained (or shall obtain) the planning, zoning, building permit or similar permission for the Permanent Works, and any other permissions described in the Specification as having been (or to be) obtained by the Employer; and the Employer shall indemnify and hold the Contractor harmless against and from the consequences of any failure to do so; and

(b) the Contractor shall give all notices, pay all taxes, duties and fees, and obtain all permits, licences and approvals, as required by the Laws in relation to the execution and completion of the Works and the remedying of any defects; and the Contractor shall indemnify and hold the Employer harmless against and from the consequences of any failure to do so, unless the Contractor is impeded to accomplish these actions and shows evidence of its diligence.

1.14 Joint and Several Liability

If the Contractor constitutes (under applicable Laws) a joint venture, consortium or other unincorporated grouping of two or more persons:

(a) these persons shall be deemed to be jointly and severally liable to the Employer for the performance of the Contract;

(b) these persons shall notify the Employer of their leader who shall have authority to bind the Contractor and each of these persons; and

(c) the Contractor shall not alter its composition or legal status without the prior consent of the Employer.

1.15 Inspections and Audit by the Bank

The Contractor shall permit the Bank and/or persons appointed by the Bank to inspect the Site and/or the Contractor's accounts and records relating to the performance of the Contract and to have such accounts and records audited by auditors appointed by the Bank if required by the Bank.

2 The Employer

2.1 Right of Access to the Site

The Employer shall give the Contractor right of access to, and possession of, all parts of the Site within the time (or times) stated in the Contract Data. The right and possession may not be exclusive to the Contractor. If, under the Contract, the Employer is required to give (to the Contractor) possession of any foundation, structure, plant or means of access, the Employer shall do so in the time and manner stated in the Specification. However, the Employer may withhold any such right or possession until the Performance Security has been received.

If no such time is stated in the Contract Data, the Employer shall give the Contractor right of access to, and possession of, the Site within such times as required to enable the Contractor to proceed without disruption in accordance with the programme submitted under Sub-Clause 8.3 [Programme].

If the Contractor suffers delay and/or incurs Cost as a result of a failure by the Employer to give any such right or possession within such time, the Contractor shall give notice to the Engineer and shall be entitled subject to Sub-Clause 20.1 [Contractor's Claims] to:

(a) an extension of time for any such delay, if completion is or will be delayed, under Sub-Clause 8.4 [Extension of Time for Completion], and

(b) payment of any such Cost plus profit, which shall be included in the Contract Price.

After receiving this notice, the Engineer shall proceed in accordance with Sub-Clause 3.5 [Determinations] to agree or determine these matters.

However, if and to the extent that the Employer's failure was caused by any error or delay by the Contractor, including an error in, or delay in the submission of, any of the Contractor's Documents, the Contractor shall not be entitled to such extension of time, Cost or profit.

2.2 Permits, Licences or Approvals

The Employer shall provide, at the request of the Contractor, such reasonable assistance as to allow the Contractor to obtain properly:

(a) copies of the Laws of the Country which are relevant to the Contract but are not readily available, and

(b) any permits, licences or approvals required by the Laws of the Country:

(i) which the Contractor is required to obtain under Sub-Clause 1.13 [Compliance with Laws],

(ii) for the delivery of Goods, including clearance through customs, and

(iii) for the export of Contractor's Equipment when it is removed from the Site.

2.3 Employer's Personnel

The Employer shall be responsible for ensuring that the Employer's Personnel and the Employer's other contractors on the Site:

(a) co-operate with the Contractor's efforts under Sub-Clause 4.6 [Co-operation], and

(b) take actions similar to those which the Contractor is required to take under sub-paragraphs (a), (b) and (c) of Sub-Clause 4.8 [Safety Procedures] and under Sub-Clause 4.18 [Protection of the Environment].

2.4 Employer's Financial Arrangements

The Employer shall submit, before the Commencement Date and thereafter within 28 days after receiving any request from the Contractor, reasonable evidence that financial arrangements have been made and are being maintained which will enable the Employer to pay the Contract Price punctually (as estimated at that time) in accordance with Clause 14 [Contract Price and Payment]. Before the Employer makes any material change to his financial arrangements, the Employer shall give notice to the Contractor with detailed particulars.

In addition, if the Bank has notified to the Borrower that the Bank has suspended disbursements under its loan, which finances in whole or in part the execution of the Works, the Employer shall give notice of such suspension to the Contractor with detailed particulars, including the date of such notification, with a copy to the Engineer, within 7 days of the Borrower having received the suspension notification from the Bank. If alternative funds will be available in appropriate currencies to the Employer to continue making payments to the Contractor beyond a date 60 days after the date of Bank notification of the suspension, the Employer shall provide reasonable evidence in his notice of the extent to which such funds will be available.

2.5 Employer's Claims

If the Employer considers himself to be entitled to any payment under any Clause of these Conditions or otherwise in connection with the Contract, and/or to any extension of the Defects Notification Period, the Employer or the Engineer shall give notice and particulars to the Contractor. However, notice is not required for payments due under Sub-Clause 4.19 [Electricity, Water and Gas], under Sub-Clause 4.20 [Employer's Equipment and Free-Issue Materials], or for other services requested by the Contractor.

The notice shall be given as soon as practicable and no longer than 28 days after the Employer became aware, or should have become aware, of the event or circumstances giving rise to the claim. A notice relating to any extension of the Defects Notification Period shall be given before the expiry of such period.

The particulars shall specify the Clause or other basis of the claim, and shall include substantiation of the amount and/or extension to which the Employer considers himself to be entitled in connection with the Contract. The Engineer shall then proceed in accordance with Sub-Clause 3.5 [Determinations] to agree or determine (i) the amount (if any) which the Employer is entitled to be paid by the Contractor, and/or (ii) the extension (if any) of the Defects Notification Period in accordance with Sub-Clause 11.3 [Extension of Defects Notification Period].

This amount may be included as a deduction in the Contract Price and Payment Certificates. The Employer shall only be entitled to set off against or make any deduction from an amount certified in a Payment Certificate, or to otherwise claim against the Contractor, in accordance with this Sub-Clause.

3 The Engineer

3.1 Engineer's Duties and Authority

The Employer shall appoint the Engineer who shall carry out the duties assigned to him in the Contract. The Engineer's staff shall include suitably qualified engineers and other professionals who are competent to carry out these duties.

The Engineer shall have no authority to amend the Contract.

The Engineer may exercise the authority attributable to the Engineer as specified in or necessarily to be implied from the Contract. If the Engineer is required to obtain the approval of the Employer before exercising a specified authority, the requirements shall be as stated in the Particular Conditions. The Employer shall promptly inform the Contractor of any change to the authority attributed to the Engineer.

However, whenever the Engineer exercises a specified authority for which the Employer's approval is required, then (for the purposes of the Contract) the Employer shall be deemed to have given approval.

Except as otherwise stated in these Conditions:

(a) whenever carrying out duties or exercising authority, specified in or implied by the Contract, the Engineer shall be deemed to act for the Employer;

(b) the Engineer has no authority to relieve either Party of any duties, obligations or responsibilities under the Contract;

(c) any approval, check, certificate, consent, examination, inspection, instruction, notice, proposal, request, test, or similar act by the Engineer (including absence of disapproval) shall not relieve the Contractor from any responsibility he has under the Contract, including responsibility for errors, omissions, discrepancies and non-compliances; and

(d) any act by the Engineer in response to a Contractor's request except as otherwise expressly specified shall be notified in writing to the Contractor within 28 days of receipt.

The following provisions shall apply:

The Engineer shall obtain the specific approval of the Employer before taking action under the-following Sub-Clauses of these Conditions:

(A) Sub-Clause 4.12: agreeing or determining an extension of time and/or additional cost.

(B) Sub-Clause 13.1: instructing a Variation, except;

(i) in an emergency situation as determined by the Engineer, or

(ii) if such a Variation would increase the Accepted Contract Amount by less than the percentage specified in the Contract Data.

(C) Sub-Clause 13.3: approving a proposal for Variation submitted by the Contractor in accordance with Sub Clause 13.1 or 13.2.

(D) Sub-Clause 13.4: specifying the amount payable in each of the applicable currencies

Notwithstanding the obligation, as set out above, to obtain approval, if, in the opinion of the Engineer, an emergency occurs affecting the safety of life or of the Works or of adjoining property, he may, without relieving the Contractor of any of his duties and responsibility under the Contract, instruct the Contractor to execute all such work or to do all such things as may, in the opinion of the Engineer, be necessary to abate or reduce the risk. The Contractor shall forthwith comply, despite the absence of approval of the Employer, with any such instruction of the Engineer. The Engineer shall determine an addition to the Contract Price, in respect of such instruction, in accordance with Clause 13 and shall notify the Contractor accordingly, with a copy to the Employer.

3.2 Delegation by the Engineer

The Engineer may from time to time assign duties and delegate authority to assistants, and may also revoke such assignment or delegation. These assistants may include a resident engineer, and/or independent inspectors appointed to inspect and/or test items of Plant and/or Materials. The assignment, delegation or revocation shall be in writing and shall not take effect until copies have been received by both Parties. However, unless otherwise agreed by both Parties, the Engineer shall not delegate the authority to determine any matter in accordance with Sub-Clause 3.5 [Determinations].

Assistants shall be suitably qualified persons, who are competent to carry out these duties and exercise this authority, and who are fluent in the language for communications defined in Sub-Clause 1.4 [Law and Language].

Each assistant, to whom duties have been assigned or authority has been delegated, shall only be authorised to issue instructions to the Contractor to the extent defined by the delegation. Any approval, check, certificate, consent, examination, inspection, instruction, notice, proposal, request, test, or similar act by an assistant, in accordance with the delegation, shall have the same effect as though the act had been an act of the Engineer. However:

(a) any failure to disapprove any work, Plant or Materials shall not constitute approval, and shall therefore not prejudice the right of the Engineer to reject the work, Plant or Materials;

(b) if the Contractor questions any determination or instruction of an assistant, the Contractor may refer the matter to the Engineer, who shall promptly confirm, reverse or vary the determination or instruction.

3.3 Instructions of the Engineer

The Engineer may issue to the Contractor (at any time) instructions and additional or modified Drawings which may be necessary for the execution of the Works and the remedying of any defects, all in accordance with the Contract. The Contractor shall only take instructions from the Engineer, or from an assistant to whom the appropriate authority has been delegated under this Clause. If an instruction constitutes a Variation, Clause 13 [Variations and Adjustments] shall apply.

The Contractor shall comply with the instructions given by the Engineer or delegated assistant, on any matter related to the Contract. Whenever practicable, their instructions shall be given in writing. If the Engineer or a delegated assistant:

(a) gives an oral instruction,

(b) receives a written confirmation of the instruction, from (or on behalf of) the Contractor, within two working days after giving the instruction, and

(c) does not reply by issuing a written rejection and/or instruction within two working days after receiving the confirmation,

then the confirmation shall constitute the written instruction of the Engineer or delegated assistant (as the case may be).

3.4 Replacement of the Engineer

If the Employer intends to replace the Engineer, the Employer shall, not less than 21 days before the intended date of replacement, give notice to the Contractor of the name, address and relevant experience of the intended replacement Engineer. If the Contractor considers the intended replacement Engineer to be unsuitable, he has the right to raise objection against him by notice to the Employer, with supporting particulars, and the Employer shall give full and fair consideration to this objection.

3.5 Determinations

Whenever these Conditions provide that the Engineer shall proceed in accordance with this Sub-Clause 3.5 to agree or determine any matter, the Engineer shall consult with each Party in an endeavour to reach agreement. If agreement is not achieved, the Engineer shall make a fair determination in accordance with the Contract, taking due regard of all relevant circumstances.

The Engineer shall give notice to both Parties of each agreement or determination, with supporting particulars, within 28 days from the receipt of the corresponding claim or request except when otherwise specified. Each Party shall give effect to each agreement or determination unless and until revised under Clause 20 [Claims, Disputes and Arbitration].

4 The Contractor

4.1 Contractor's General Obligations

The Contractor shall design (to the extent specified in the Contract), execute and complete the Works in accordance with the Contract and with the Engineer's instructions, and shall remedy any defects in the Works.

The Contractor shall provide the Plant and Contractor's Documents specified in the Contract, and all Contractor's Personnel, Goods, consumables and other things and services, whether of a temporary or permanent nature, required in and for this design, execution, completion and remedying of defects.

All equipment, material, and services to be incorporated in or required for the Works shall have their origin in any eligible source country as defined by the Bank.

The Contractor shall be responsible for the adequacy, stability and safety of all Site operations and of all methods of construction. Except to the extent specified in the Contract, the Contractor (i) shall be responsible for all Contractor's Documents, Temporary Works, and such design of each item of Plant and Materials as is required for the item to be in accordance with the Contract, and (ii) shall not otherwise be responsible for the design or specification of the Permanent Works.

The Contractor shall, whenever required by the Engineer, submit details of the arrangements and methods which the Contractor proposes to adopt for the execution of the Works. No significant alteration to these arrangements and methods shall be made without this having previously been notified to the Engineer.

If the Contract specifies that the Contractor shall design any part of the Permanent Works, then unless otherwise stated in the Particular Conditions:

(a) the Contractor shall submit to the Engineer the Contractor's Documents for this part in accordance with the procedures specified in the Contract;

(b) these Contractor's Documents shall be in accordance with the Specification and Drawings, shall be written in the language for communications defined in Sub-Clause 1.4 [Law and Language], and shall include additional information required by the Engineer to add to the Drawings for co-ordination of each Party's designs;

(c) the Contractor shall be responsible for this part and it shall, when the Works are completed, be fit for such purposes for which the part is intended as are specified in the Contract; and

(d) prior to the commencement of the Tests on Completion, the Contractor shall submit to the Engineer the "as-built" documents and, if applicable, operation and maintenance manuals in accordance with the Specification and in sufficient detail for the Employer to operate, maintain, dismantle, reassemble, adjust and repair this part of the Works. Such part shall not be considered to be completed for the purposes of taking-over under Sub-Clause 10.1 [Taking Over of the Works and Sections] until these documents and manuals have been submitted to the Engineer.

4.2 Performance Security

The Contractor shall obtain (at his cost) a Performance Security for proper performance, in the amount stated in the Contract Data and denominated in the currency(ies) of the Contract or in a freely convertible currency acceptable to the Employer. If an amount is not stated in the Contract Data, this Sub-Clause shall not apply.

The Contractor shall deliver the Performance Security to the Employer within 28 days after receiving the Letter of Acceptance, and shall send a copy to the Engineer. The Performance Security shall be issued by a reputable bank or financial institution selected by the Contractor, and shall be in the form annexed to the Particular Conditions, as stipulated by the Employer in the Contract Data, or in another form approved by the Employer.

The Contractor shall ensure that the Performance Security is valid and enforceable until the Contractor has executed and completed the Works and remedied any defects. If the terms of the Performance Security specify its expiry date, and the Contractor has not become entitled to receive the Performance Certificate by the date 28 days prior to the expiry date, the Contractor shall extend the validity of the Performance Security until the Works have been completed and any defects have been remedied.

The Employer shall not make a claim under the Performance Security, except for amounts to which the Employer is entitled under the Contract.

The Employer shall indemnify and hold the Contractor harmless against and from all damages, losses and expenses (including legal fees and expenses) resulting from a claim under the Performance Security to the extent to which the Employer was not entitled to make the claim.

The Employer shall return the Performance Security to the Contractor within 21 days after receiving a copy of the Performance Certificate.

Without limitation to the provisions of the rest of this Sub-Clause, whenever the Engineer determines an addition or a reduction to the Contract Price as a result of a change in cost and/or legislation, or as a result of a Variation, amounting to more than 25 percent of the portion of the Contract Price payable in a specific currency, the Contractor shall at the Engineer's request promptly increase, or may decrease, as the case may be, the value of the Performance Security in that currency by an equal percentage.

4.3 Contractor's Representative

The Contractor shall appoint the Contractor's Representative and shall give him all authority necessary to act on the Contractor's behalf under the Contract.

Unless the Contractor's Representative is named in the Contract, the Contractor shall, prior to the Commencement Date, submit to the Engineer for consent the name and particulars of the person the Contractor proposes to appoint as Contractor's Representative. If consent is withheld or subsequently revoked in terms of Sub-Clause 6.9 [Contractor's Personnel], or if the appointed person fails to act as Contractor's Representative, the Contractor shall similarly submit the name and particulars of another suitable person for such appointment.

The Contractor shall not, without the prior consent of the Engineer, revoke the appointment of the Contractor's Representative or appoint a replacement.

The whole time of the Contractor's Representative shall be given to directing the Contractor's performance of the Contract. If the Contractor's Representative is to be temporarily absent from the Site during the execution of the Works, a suitable replacement person shall be appointed, subject to the Engineer's prior consent, and the Engineer shall be notified accordingly.

The Contractor's Representative shall, on behalf of the Contractor, receive instructions under Sub-Clause 3.3 [Instructions of the Engineer].

The Contractor's Representative may delegate any powers, functions and authority to any competent person, and may at any time revoke the delegation. Any delegation or revocation shall not take effect until the Engineer has received prior notice signed by the Contractor's Representative, naming the person and specifying the powers, functions and authority being delegated or revoked.

The Contractor's Representative shall be fluent in the language for communications defined in Sub-Clause 1.4 [Law and Language]. If the Contractor's Representative's delegates are not fluent in the said language, the Contractor shall make competent interpreters available during all working hours in a number deemed sufficient by the Engineer.

4.4 Subcontractors

The Contractor shall not subcontract the whole of the Works.

The Contractor shall be responsible for the acts or defaults of any Subcontractor, his agents or employees, as if they were the acts or defaults of the Contractor. Unless otherwise stated in the Particular Conditions:

(a) the Contractor shall not be required to obtain consent to suppliers solely of Materials, or to a subcontract for which the Subcontractor is named in the Contract;

(b) the prior consent of the Engineer shall be obtained to other proposed Subcontractors;

(c) the Contractor shall give the Engineer not less than 28 days' notice of the intended date of the commencement of each Subcontractor's work, and of the commencement of such work on the Site; and

(d) each subcontract shall include provisions which would entitle the Employer to require the subcontract to be assigned to the Employer under Sub-Clause 4.5 [Assignment of Benefit of Subcontract] (if or when applicable) or in the event of termination under Sub-Clause 15.2 [Termination by Employer].

The Contractor shall ensure that the requirements imposed on the Contractor by Sub-Clause 1.12 [Confidential Details] apply equally to each Subcontractor.

Where practicable, the Contractor shall give fair and reasonable opportunity for contractors from the Country to be appointed as Subcontractors.

4.5 Assignment of Benefit of Subcontract

If a Subcontractor's obligations extend beyond the expiry date of the relevant Defects Notification Period and the Engineer, prior to this date, instructs the Contractor to assign the benefit of such obligations to the Employer, then the Contractor shall do so. Unless otherwise stated in the assignment, the Contractor shall have no liability to the Employer for the work carried out by the Subcontractor after the assignment takes effect.

4.6 Co-operation

The Contractor shall, as specified in the Contract or as instructed by the Engineer, allow appropriate opportunities for carrying out work to:

(a) the Employer's Personnel,

(b) any other contractors employed by the Employer, and

(c) the personnel of any legally constituted public authorities,

who may be employed in the execution on or near the Site of any work not included in the Contract.

Any such instruction shall constitute a Variation if and to the extent that it causes the Contractor to suffer delays and/or to incur Unforeseeable Cost. Services for these personnel and other contractors may include the use of Contractor's Equipment, Temporary Works or access arrangements which are the responsibility of the Contractor.

If, under the Contract, the Employer is required to give to the Contractor possession of any foundation, structure, plant or means of access in accordance with Contractor's Documents, the Contractor shall submit such documents to the Engineer in the time and manner stated in the Specification.

COPYRIGHT FIDIC JUNE 2010

4.7 Setting Out

The Contractor shall set out the Works in relation to original points, lines and levels of reference specified in the Contract or notified by the Engineer. The Contractor shall be responsible for the correct positioning of all parts of the Works, and shall rectify any error in the positions, levels, dimensions or alignment of the Works.

The Employer shall be responsible for any errors in these specified or notified items of reference, but the Contractor shall use reasonable efforts to verify their accuracy before they are used.

If the Contractor suffers delay and/or incurs Cost from executing work which was necessitated by an error in these items of reference, and an experienced contractor could not reasonably have discovered such error and avoided this delay and/or Cost, the Contractor shall give notice to the Engineer and shall be entitled subject to Sub-Clause 20.1 [Contractor's Claims] to:

(a) an extension of time for any such delay, if completion is or will be delayed, under Sub-Clause 8.4 [Extension of Time for Completion], and

(b) payment of any such Cost plus profit, which shall be included in the Contract Price.

After receiving this notice, the Engineer shall proceed in accordance with Sub-Clause 3.5 [Determinations] to agree or determine (i) whether and (if so) to what extent the error could not reasonably have been discovered, and (ii) the matters described in sub-paragraphs (a) and (b) above related to this extent.

4.8 Safety Procedures

The Contractor shall:

(a) comply with all applicable safety regulations,

(b) take care for the safety of all persons entitled to be on the Site,

(c) use reasonable efforts to keep the Site and Works clear of unnecessary obstruction so as to avoid danger to these persons,

(d) provide fencing, lighting, guarding and watching of the Works until completion and taking over under Clause 10 [Employer's Taking Over], and

(e) provide any Temporary Works (including roadways, footways, guards and fences) which may be necessary, because of the execution of the Works, for the use and protection of the public and of owners and occupiers of adjacent land.

4.9 Quality Assurance

The Contractor shall institute a quality assurance system to demonstrate compliance with the requirements of the Contract. The system shall be in accordance with the details stated in the Contract. The Engineer shall be entitled to audit any aspect of the system.

Details of all procedures and compliance documents shall be submitted to the Engineer for information before each design and execution stage is commenced. When any document of a technical nature is issued to the Engineer, evidence of the prior approval by the Contractor himself shall be apparent on the document itself.

Compliance with the quality assurance system shall not relieve the Contractor of any of his duties, obligations or responsibilities under the Contract.

COPYRIGHT FIDIC JUNE 2010

4.10 Site Data

The Employer shall have made available to the Contractor for his information, prior to the Base Date, all relevant data in the Employer's possession on sub-surface and hydrological conditions at the Site, including environmental aspects. The Employer shall similarly make available to the Contractor all such data which come into the Employer's possession after the Base Date. The Contractor shall be responsible for interpreting all such data.

To the extent which was practicable (taking account of cost and time), the Contractor shall be deemed to have obtained all necessary information as to risks, contingencies and other circumstances which may influence or affect the Tender or Works. To the same extent, the Contractor shall be deemed to have inspected and examined the Site, its surroundings, the above data and other available information, and to have been satisfied before submitting the Tender as to all relevant matters, including (without limitation):

(a) the form and nature of the Site, including sub-surface conditions,

(b) the hydrological and climatic conditions,

(c) the extent and nature of the work and Goods necessary for the execution and completion of the Works and the remedying of any defects,

(d) the Laws, procedures and labour practices of the Country, and

(e) the Contractor's requirements for access, accommodation, facilities, personnel, power, transport, water and other services.

4.11 Sufficiency of the Accepted Contract Amount

The Contractor shall be deemed to:

(a) have satisfied himself as to the correctness and sufficiency of the Accepted Contract Amount, and

(b) have based the Accepted Contract Amount on the data, interpretations, necessary information, inspections, examinations and satisfaction as to all relevant matters referred to in Sub-Clause 4.10 [Site Data].

Unless otherwise stated in the Contract, the Accepted Contract Amount covers all the Contractor's obligations under the Contract (including those under Provisional Sums, if any) and all things necessary for the proper execution and completion of the Works and the remedying of any defects.

4.12 Unforeseeable Physical Conditions

In this Sub-Clause, "physical conditions" means natural physical conditions and man-made and other physical obstructions and pollutants, which the Contractor encounters at the Site when executing the Works, including sub-surface and hydrological conditions but excluding climatic conditions.

If the Contractor encounters adverse physical conditions which he considers to have been Unforeseeable, the Contractor shall give notice to the Engineer as soon as practicable.

This notice shall describe the physical conditions, so that they can be inspected by the Engineer, and shall set out the reasons why the Contractor considers them to be Unforeseeable. The Contractor shall continue executing the Works, using such proper and reasonable measures as are appropriate for the physical conditions, and shall comply with any instructions which the Engineer may give. If an instruction constitutes a Variation, Clause 13 [Variations and Adjustments] shall apply.

If and to the extent that the Contractor encounters physical conditions which are Unforeseeable, gives such a notice, and suffers delay and/or incurs Cost due to these conditions, the Contractor shall be entitled subject to notice under Sub-Clause 20.1 [Contractor's Claims] to:

(a) an extension of time for any such delay, if completion is or will be delayed, under Sub-Clause 8.4 [Extension of Time for Completion], and

(b) payment of any such Cost, which shall be included in the Contract Price.

Upon receiving such notice and inspecting and/or investigating these physical conditions, the Engineer shall proceed in accordance with Sub-Clause 3.5 [Determinations] to agree or determine (i) whether and (if so) to what extent these physical conditions were Unforeseeable, and (ii) the matters described in sub-paragraphs (a) and (b) above related to this extent.

However, before additional Cost is finally agreed or determined under sub-paragraph (ii), the Engineer may also review whether other physical conditions in similar parts of the Works (if any) were more favourable than could reasonably have been foreseen when the Contractor submitted the Tender. If and to the extent that these more favourable conditions were encountered, the Engineer may proceed in accordance with Sub-Clause 3.5 [Determinations] to agree or determine the reductions in Cost which were due to these conditions, which may be included (as deductions) in the Contract Price and Payment Certificates. However, the net effect of all adjustments under sub-paragraph (b) and all these reductions, for all the physical conditions encountered in similar parts of the Works, shall not result in a net reduction in the Contract Price.

The Engineer shall take account of any evidence of the physical conditions foreseen by the Contractor when submitting the Tender, which shall be made available by the Contractor, but shall not be bound by the Contractor's interpretation of any such evidence.

4.13 Rights of Way and Facilities

Unless otherwise specified in the Contract the Employer shall provide effective access to and possession of the Site including special and/or temporary rights-of-way which are necessary for the Works. The Contractor shall obtain, at his risk and cost, any additional rights of way or facilities outside the Site which he may require for the purposes of the Works.

4.14 Avoidance of Interference

The Contractor shall not interfere unnecessarily or improperly with:

(a) the convenience of the public, or

(b) the access to and use and occupation of all roads and footpaths, irrespective of whether they are public or in the possession of the Employer or of others.

The Contractor shall indemnify and hold the Employer harmless against and from all damages, losses and expenses (including legal fees and expenses) resulting from any such unnecessary or improper interference.

4.15 Access Route

The Contractor shall be deemed to have been satisfied as to the suitability and availability of access routes to the Site at Base Date. The Contractor shall use reasonable efforts to prevent any road or bridge from being damaged by the Contractor's traffic or by the Contractor's Personnel. These efforts shall include the proper use of appropriate vehicles and routes.

Except as otherwise stated in these Conditions:

(a) the Contractor shall (as between the Parties) be responsible for any maintenance which may be required for his use of access routes;

(b) the Contractor shall provide all necessary signs or directions along access routes, and shall obtain any permission which may be required from the relevant authorities for his use of routes, signs and directions;

(c) the Employer shall not be responsible for any claims which may arise from the use or otherwise of any access route;

(d) the Employer does not guarantee the suitability or availability of particular access routes; and

(e) Costs due to non-suitability or non-availability, for the use required by the Contractor, of access routes shall be borne by the Contractor.

4.16 Transport of Goods

Unless otherwise stated in the Particular Conditions:

(a) the Contractor shall give the Engineer not less than 21 days' notice of the date on which any Plant or a major item of other Goods will be delivered to the Site;

(b) the Contractor shall be responsible for packing, loading, transporting, receiving, unloading, storing and protecting all Goods and other things required for the Works; and

(c) the Contractor shall indemnify and hold the Employer harmless against and from all damages, losses and expenses (including legal fees and expenses) resulting from the transport of Goods, and shall negotiate and pay all claims arising from their transport.

4.17 Contractor's Equipment

The Contractor shall be responsible for all Contractor's Equipment. When brought on to the Site, Contractor's Equipment shall be deemed to be exclusively intended for the execution of the Works. The Contractor shall not remove from the Site any major items of Contractor's Equipment without the consent of the Engineer. However, consent shall not be required for vehicles transporting Goods or Contractor's Personnel off Site.

4.18 Protection of the Environment

The Contractor shall take all reasonable steps to protect the environment (both on and off the Site) and to limit damage and nuisance to people and property resulting from pollution, noise and other results of his operations.

The Contractor shall ensure that emissions, surface discharges and effluent from the Contractor's activities shall not exceed the values stated in the Specification or prescribed by applicable Laws.

4.19 Electricity, Water and Gas

The Contractor shall, except as stated below, be responsible for the provision of all power, water and other services he may require for his construction activities and to the extent defined in the Specifications, for the tests.

The Contractor shall be entitled to use for the purposes of the Works such supplies of electricity, water, gas and other services as may be available on the Site and of which details and prices are given in the Specification. The Contractor shall, at his risk and cost, provide any apparatus necessary for his use of these services and for measuring the quantities consumed.

The quantities consumed and the amounts due (at these prices) for such services shall be agreed or determined by the Engineer in accordance with Sub-Clause 2.5 [Employer's Claims] and Sub-Clause 3.5 [Determinations]. The Contractor shall pay these amounts to the Employer.

COPYRIGHT FIDIC JUNE 2010

4.20 Employer's Equipment and Free-Issue Materials

The Employer shall make the Employer's Equipment (if any) available for the use of the Contractor in the execution of the Works in accordance with the details, arrangements and prices stated in the Specification. Unless otherwise stated in the Specification:

(a) the Employer shall be responsible for the Employer's Equipment, except that

(b) the Contractor shall be responsible for each item of Employer's Equipment whilst any of the Contractor's Personnel is operating it, driving it, directing it or in possession or control of it.

The appropriate quantities and the amounts due (at such stated prices) for the use of Employer's Equipment shall be agreed or determined by the Engineer in accordance with Sub-Clause 2.5 [Employer's Claims] and Sub-Clause 3.5 [Determinations]. The Contractor shall pay these amounts to the Employer.

The Employer shall supply, free of charge, the "free-issue materials" (if any) in accordance with the details stated in the Specification. The Employer shall, at his risk and cost, provide these materials at the time and place specified in the Contract. The Contractor shall then visually inspect them, and shall promptly give notice to the Engineer of any shortage, defect or default in these materials. Unless otherwise agreed by both Parties, the Employer shall immediately rectify the notified shortage, defect or default.

After this visual inspection, the free-issue materials shall come under the care, custody and control of the Contractor. The Contractor's obligations of inspection, care, custody and control shall not relieve the Employer of liability for any shortage, defect or default not apparent from a visual inspection.

4.21 Progress Reports

Unless otherwise stated in the Particular Conditions, monthly progress reports shall be prepared by the Contractor and submitted to the Engineer in six copies. The first report shall cover the period up to the end of the first calendar month following the Commencement Date. Reports shall be submitted monthly thereafter, each within 7 days after the last day of the period to which it relates.

Reporting shall continue until the Contractor has completed all work which is known to be outstanding at the completion date stated in the Taking-Over Certificate for the Works.

Each report shall include:

(a) charts and detailed descriptions of progress, including each stage of design (if any), Contractor's Documents, procurement, manufacture, delivery to Site, construction, erection and testing; and including these stages for work by each nominated Subcontractor (as defined in Clause 5 [Nominated Subcontractors]),

(b) photographs showing the status of manufacture and of progress on the Site;

(c) for the manufacture of each main item of Plant and Materials, the name of the manufacturer, manufacture location, percentage progress, and the actual or expected dates of:

  (i) commencement of manufacture,

  (ii) Contractor's inspections,

  (iii) tests, and

  (iv) shipment and arrival at the Site;

(d) the details described in Sub-Clause 6.10 [Records of Contractor's Personnel and Equipment];

(e) copies of quality assurance documents, test results and certificates of Materials;

(f) list of notices given under Sub-Clause 2.5 [Employer's Claims] and notices given under Sub-Clause 20.1 [Contractor's Claims];

(g) safety statistics, including details of any hazardous incidents and activities relating to environmental aspects and public relations; and

(h) comparisons of actual and planned progress, with details of any events or circumstances which may jeopardise the completion in accordance with the Contract, and the measures being (or to be) adopted to overcome delays.

4.22 Security of the Site

Unless otherwise stated in the Particular Conditions:

(a) the Contractor shall be responsible for keeping unauthorised persons off the Site, and

(b) authorised persons shall be limited to the Contractor's Personnel and the Employer's Personnel; and to any other personnel notified to the Contractor, by the Employer or the Engineer, as authorised personnel of the Employer's other contractors on the Site.

4.23 Contractor's Operations on Site

The Contractor shall confine his operations to the Site, and to any additional areas which may be obtained by the Contractor and agreed by the Engineer as additional working areas. The Contractor shall take all necessary precautions to keep Contractor's Equipment and Contractor's Personnel within the Site and these additional areas, and to keep them off adjacent land.

During the execution of the Works, the Contractor shall keep the Site free from all unnecessary obstruction, and shall store or dispose of any Contractor's Equipment or surplus materials. The Contractor shall clear away and remove from the Site any wreckage, rubbish and Temporary Works which are no longer required.

Upon the issue of a Taking-Over Certificate, the Contractor shall clear away and remove, from that part of the Site and Works to which the Taking-Over Certificate refers, all Contractor's Equipment, surplus material, wreckage, rubbish and Temporary Works. The Contractor shall leave that part of the Site and the Works in a clean and safe condition. However, the Contractor may retain on Site, during the Defects Notification Period, such Goods as are required for the Contractor to fulfil obligations under the Contract.

4.24 Fossils

All fossils, coins, articles of value or antiquity, and structures and other remains or items of geological or archaeological interest found on the Site shall be placed under the care and authority of the Employer. The Contractor shall take reasonable precautions to prevent Contractor's Personnel or other persons from removing or damaging any of these findings.

The Contractor shall, upon discovery of any such finding, promptly give notice to the Engineer, who shall issue instructions for dealing with it. If the Contractor suffers delay and/or incurs Cost from complying with the instructions, the Contractor shall give a further notice to the Engineer and shall be entitled subject to Sub-Clause 20.1 [Contractor's Claims] to:

(a) an extension of time for any such delay, if completion is or will be delayed, under Sub-Clause 8.4 [Extension of Time for Completion], and

(b) payment of any such Cost, which shall be included in the Contract Price.

After receiving this further notice, the Engineer shall proceed in accordance with Sub-Clause 3.5 [Determinations] to agree or determine these matters.

5 Nominated Subcontractors

5.1 Definition of "nominated Subcontractor"

In the Contract, "nominated Subcontractor" means a Subcontractor:

(a) who is stated in the Contract as being a nominated Subcontractor, or

(b) whom the Engineer, under Clause 13 [Variations and Adjustments], instructs the Contractor to employ as a Subcontractor subject to Sub-Clause 5.2 [Objection to Notification].

5.2 Objection to Nomination

The Contractor shall not be under any obligation to employ a nominated Subcontractor against whom the Contractor raises reasonable objection by notice to the Engineer as soon as practicable, with supporting particulars. An objection shall be deemed reasonable if it arises from (among other things) any of the following matters, unless the Employer agrees in writing to indemnify the Contractor against and from the consequences of the matter:

(a) there are reasons to believe that the Subcontractor does not have sufficient competence, resources or financial strength;

(b) the nominated Subcontractor does not accept to indemnify the Contractor against and from any negligence or misuse of Goods by the nominated Subcontractor, his agents and employees; or

(c) the nominated Subcontractor does not accept to enter into a subcontract which specifies that, for the subcontracted work (including design, if any), the nominated Subcontractor shall:

  (i) undertake to the Contractor such obligations and liabilities as will enable the Contractor to discharge his obligations and liabilities under the Contract,

  (ii) indemnify the Contractor against and from all obligations and liabilities arising under or in connection with the Contract and from the consequences of any failure by the Subcontractor to perform these obligations or to fulfil these liabilities, and

  (iii) be paid only if and when the Contractor has received from the Employer payments for sums due under the Subcontract referred to under Sub-Clause 5.3 [Payment to nominated Subcontractors].

5.3 Payments to nominated Subcontractors

The Contractor shall pay to the nominated Subcontractor the amounts shown on the nominated Subcontractor's invoices approved by the Contractor which the Engineer certifies to be due in accordance with the subcontract. These amounts plus other charges shall be included in the Contract Price in accordance with sub-paragraph (b) of Sub-Clause 13.5 [Provisional Sums], except as stated in Sub-Clause 5.4 [Evidence of Payments].

5.4 Evidence of Payments

Before issuing a Payment Certificate which includes an amount payable to a nominated Subcontractor, the Engineer may request the Contractor to supply reasonable evidence that the nominated Subcontractor has received all amounts due in accordance with previous Payment Certificates, less applicable deductions for retention or otherwise. Unless the Contractor:

(a) submits this reasonable evidence to the Engineer, or

COPYRIGHT FIDIC JUNE 2010

(b) (i) satisfies the Engineer in writing that the Contractor is reasonably entitled to withhold or refuse to pay these amounts, and

(ii) submits to the Engineer reasonable evidence that the nominated Subcontractor has been notified of the Contractor's entitlement,

then the Employer may (at his sole discretion) pay, direct to the nominated Subcontractor, part or all of such amounts previously certified (less applicable deductions) as are due to the nominated Subcontractor and for which the Contractor has failed to submit the evidence described in sub-paragraphs (a) or (b) above. The Contractor shall then repay, to the Employer, the amount which the nominated Subcontractor was directly paid by the Employer.

6 Staff and Labour

6.1 Engagement of Staff and Labour

Except as otherwise stated in the Specification, the Contractor shall make arrangements for the engagement of all staff and labour, local or otherwise, and for their payment, feeding, transport and, when appropriate, housing.

The Contractor is encouraged, to the extent practicable and reasonable, to employ staff and labour with appropriate qualifications and experience from sources within the Country.

6.2 Rates of Wages and Conditions of Labour

The Contractor shall pay rates of wages, and observe conditions of labour, which are not lower than those established for the trade or industry where the work is carried out. If no established rates or conditions are applicable, the Contractor shall pay rates of wages and observe conditions which are not lower than the general level of wages and conditions observed locally by employers whose trade or industry is similar to that of the Contractor.

The Contractor shall inform the Contractor's Personnel about their liability to pay personal income taxes in the Country in respect of such of their salaries, wages, allowances and any benefits as are subject to tax under the Laws of the Country for the time being in force, and the Contractor shall perform such duties in regard to such deductions thereof as may be imposed on him by such Laws.

6.3 Persons in the Service of Employer

The Contractor shall not recruit, or attempt to recruit, staff and labour from amongst the Employer's Personnel.

6.4 Labour Laws

The Contractor shall comply with all the relevant labour Laws applicable to the Contractor's Personnel, including Laws relating to their employment, health, safety, welfare, immigration and emigration, and shall allow them all their legal rights.

The Contractor shall require his employees to obey all applicable Laws, including those concerning safety at work.

6.5 Working Hours

No work shall be carried out on the Site on locally recognised days of rest, or outside the normal working hours stated in the Contract Data, unless:

(a) otherwise stated in the Contract,

(b) the Engineer gives consent, or

(c) the work is unavoidable, or necessary for the protection of life or property or for the safety of the Works, in which case the Contractor shall immediately advise the Engineer.

6.6 Facilities for Staff and Labour

Except as otherwise stated in the Specification, the Contractor shall provide and maintain all necessary accommodation and welfare facilities for the Contractor's Personnel. The Contractor shall also provide facilities for the Employer's Personnel as stated in the Specification.

The Contractor shall not permit any of the Contractor's Personnel to maintain any temporary or permanent living quarters within the structures forming part of the Permanent Works.

6.7 Health and Safety

The Contractor shall at all times take all reasonable precautions to maintain the health and safety of the Contractor's Personnel. In collaboration with local health authorities, the Contractor shall ensure that medical staff, first aid facilities, sick bay and ambulance service are available at all times at the Site and at any accommodation for Contractor's and Employer's Personnel, and that suitable arrangements are made for all necessary welfare and hygiene requirements and for the prevention of epidemics.

The Contractor shall appoint an accident prevention officer at the Site, responsible for maintaining safety and protection against accidents. This person shall be qualified for this responsibility, and shall have the authority to issue instructions and take protective measures to prevent accidents. Throughout the execution of the Works, the Contractor shall provide whatever is required by this person to exercise this responsibility and authority.

The Contractor shall send, to the Engineer, details of any accident as soon as practicable after its occurrence. The Contractor shall maintain records and make reports concerning health, safety and welfare of persons, and damage to property, as the Engineer may reasonably require.

HIV-AIDS Prevention. The Contractor shall conduct an HIV-AIDS awareness programme via an approved service provider, and shall undertake such other measures as are specified in this Contract to reduce the risk of the transfer of the HIV virus between and among the Contractor's Personnel and the local community, to promote early diagnosis and to assist affected individuals.

The Contractor shall throughout the contract (including the Defects Notification Period): (i) conduct Information, Education and Communication (IEC) campaigns, at least every other month, addressed to all the Site staff and labour (including all the Contractor's employees, all Subcontractors and any other Contractor's or Employer's personnel employees, and all truck drivers and crew making deliveries to Site for construction activities) and to the immediate local communities, concerning the risks, dangers and impact, and appropriate avoidance behaviour with respect to, of Sexually Transmitted Diseases (STD) - or Sexually Transmitted Infections (STI) in general and HIV/AIDS in particular; (ii) provide male or female condoms for all Site staff and labour as appropriate; and (iii) provide for STI and HIV/AIDS screening, diagnosis, counselling and referral to a dedicated national STI and HIV/AIDS programme, (unless otherwise agreed) of all Site staff and labour.

The Contractor shall include in the programme to be submitted for the execution of the Works under Sub-Clause 8.3 an alleviation programme for Site staff and labour and their families in respect of Sexually Transmitted Infections (STI) and Sexually Transmitted Diseases (STD) including HIV/AIDS. The STI, STD and HIV/AIDS alleviation programme shall indicate when, how and at what cost the Contractor plans to satisfy the requirements of this Sub-Clause and the related specification. For each component, the programme shall detail the resources to be provided or utilised and any related sub-contracting proposed. The programme shall also include provision of a detailed cost estimate with supporting documentation. Payment to the Contractor for preparation and implementation this programme shall not exceed the Provisional Sum dedicated for this purpose.

6.8 Contractor's Superintendence

Throughout the execution of the Works, and as long thereafter as is necessary to fulfil the Contractor's obligations, the Contractor shall provide all necessary superintendence to plan, arrange, direct, manage, inspect and test the work.

Superintendence shall be given by a sufficient number of persons having adequate knowledge of the language for communications (defined in Sub-Clause 1.4 [Law and Language]) and of the operations to be carried out (including the methods and techniques required, the hazards likely to be encountered and methods of preventing accidents), for the satisfactory and safe execution of the Works.

6.9 Contractor's Personnel

The Contractor's Personnel shall be appropriately qualified, skilled and experienced in their respective trades or occupations. The Engineer may require the Contractor to remove (or cause to be removed) any person employed on the Site or Works, including the Contractor's Representative if applicable, who:

(a) persists in any misconduct or lack of care,

(b) carries out duties incompetently or negligently,

(c) fails to conform with any provisions of the Contract, or

(d) persists in any conduct which is prejudicial to safety, health, or the protection of the environment.

If appropriate, the Contractor shall then appoint (or cause to be appointed) a suitable replacement person.

6.10 Records of Contractor's Personnel and Equipment

The Contractor shall submit, to the Engineer, details showing the number of each class of Contractor's Personnel and of each type of Contractor's Equipment on the Site. Details shall be submitted each calendar month, in a form approved by the Engineer, until the Contractor has completed all work which is known to be outstanding at the completion date stated in the Taking-Over Certificate for the Works.

6.11 Disorderly Conduct

The Contractor shall at all times take all reasonable precautions to prevent any unlawful, riotous or disorderly conduct by or amongst the Contractor's Personnel, and to preserve peace and protection of persons and property on and near the Site.

6.12 Foreign Personnel

The Contractor may bring in to the Country any foreign personnel who are necessary for the execution of the Works to the extent allowed by the applicable Laws. The Contractor shall ensure that these personnel are provided with the required residence visas and work permits. The Employer will, if requested by the Contractor, use his best endeavours in a timely and expeditious manner to assist the Contractor in obtaining any local, state, national or government permission required for bringing in the Contractor's personnel.

The Contractor shall be responsible for the return of these personnel to the place where they were recruited or to their domicile. In the event of the death in the Country of any of these personnel or members of their families, the Contractor shall similarly be responsible for making the appropriate arrangements for their return or burial.

COPYRIGHT FIDIC JUNE 2010

6.13 Supply of Foodstuffs

The Contractor shall arrange for the provision of a sufficient supply of suitable food as may be stated in the Specification at reasonable prices for the Contractor's Personnel for the purposes of or in connection with the Contract.

6.14 Supply of Water

The Contractor shall, having regard to local conditions, provide on the Site an adequate supply of drinking and other water for the use of the Contractor's Personnel.

6.15 Measures against Insect and Pest Nuisance

The Contractor shall at all times take the necessary precautions to protect the Contractor's Personnel employed on the Site from insect and pest nuisance, and to reduce the danger to their health. The Contractor shall comply with all the regulations of the local health authorities, including use of appropriate insecticide.

6.16 Alcoholic Liquor or Drugs

The Contractor shall not, otherwise than in accordance with the Laws of the Country, import, sell, give, barter or otherwise dispose of any alcoholic liquor or drugs, or permit or allow importation, sale, gift, barter or disposal thereof by Contractor's Personnel.

6.17 Arms and Ammunition

The Contractor shall not give, barter, or otherwise dispose of, to any person, any arms or ammunition of any kind, or allow Contractor's Personnel to do so.

6.18 Festivals and Religious Customs

The Contractor shall respect the Country's recognized festivals, days of rest and religious or other customs.

6.19 Funeral Arrangements

The Contractor shall be responsible, to the extent required by local regulations, for making any funeral arrangements for any of his local employees who may die while engaged upon the Works.

6.20 Forced Labour

The Contractor shall not employ forced labour, which consists of any work or service, not voluntarily performed, that is exacted from an individual under threat of force or penalty, and includes any kind of involuntary or compulsory labour, such as indentured labour, bonded labour or similar labour-contracting arrangements.

6.21 Child Labour

The Contractor shall not employ children in a manner that is economically exploitative, or is likely to be hazardous, or to interfere with, the child's education, or to be harmful to the child's health or physical, mental, spiritual, moral, or social development. Where the relevant labour laws of the Country have provisions for employment of minors, the Contractor shall follow those laws applicable to the Contractor. Children below the age of 18 years shall not be employed in dangerous work.

6.22 Employment Records of Workers

The Contractor shall keep complete and accurate records of the employment of labour at the Site. The records shall include the names, ages, genders, hours worked and wages paid to all workers. These records shall be summarized on a monthly basis and submitted to the Engineer. These records shall be included in the details to be submitted by the Contractor under Sub-Clause 6.10 [Records of Contractor's Personnel and Equipment].

6.23 Workers' Organisations

In countries where the relevant labour laws recognise workers' rights to form and to join workers' organisations of their choosing without interference and to bargain collectively, the Contractor shall comply with such laws. Where the relevant labour laws substantially restrict workers' organisations, the Contractor shall enable alternative means for the Contractor's Personnel to express their grievances and protect their rights regarding working conditions and terms of employment. In either case described above, and where the relevant labour laws are silent, the Contractor shall not discourage the Contractor's Personnel from forming or joining workers' organisations of their choosing or from bargaining collectively, and shall not discriminate or retaliate against the Contractor's Personnel who participate, or seek to participate, in such organisations and bargain collectively. The Contractor shall engage with such workers' representatives. Workers' organisations are expected to fairly represent the workers in the workforce.

6.24 Non-Discrimination and Equal Opportunity

The Contractor shall not make employment decisions on the basis of personal characteristics unrelated to inherent job requirements. The Contractor shall base the employment relationship on the principle of equal opportunity and fair treatment, and shall not discriminate with respect to aspects of the employment relationship, including recruitment and hiring, compensation (including wages and benefits), working conditions and terms of employment, access to training, promotion, termination of employment or retirement, and discipline. In countries where the relevant labour laws provide for non-discrimination in employment, the Contractor shall comply with such laws. When the relevant labour laws are silent on non-discrimination in employment, the Contractor shall meet this Sub-Clause's requirements. Special measures of protection or assistance to remedy past discrimination or selection for a particular job based on the inherent requirements of the job shall not be deemed discrimination.

7 Plant, Materials and Workmanship

7.1 Manner of Execution

The Contractor shall carry out the manufacture of Plant, the production and manufacture of Materials, and all other execution of the Works:

(a) in the manner (if any) specified in the Contract,

(b) in a proper workmanlike and careful manner, in accordance with recognised good practice, and

(c) with properly equipped facilities and non-hazardous Materials, except as otherwise specified in the Contract.

7.2 Samples

The Contractor shall submit the following samples of Materials, and relevant information, to the Engineer for consent prior to using the Materials in or for the Works:

(a) manufacturer's standard samples of Materials and samples specified in the Contract, all at the Contractor's cost, and

(b) additional samples instructed by the Engineer as a Variation.

Each sample shall be labelled as to origin and intended use in the Works.

7.3 Inspection

The Employer's Personnel shall at all reasonable times:

(a) have full access to all parts of the Site and to all places from which natural Materials are being obtained, and

(b) during production, manufacture and construction (at the Site and elsewhere), be entitled to examine, inspect, measure and test the materials and workmanship, and to check the progress of manufacture of Plant and production and manufacture of Materials.

The Contractor shall give the Employer's Personnel full opportunity to carry out these activities, including providing access, facilities, permissions and safety equipment. No such activity shall relieve the Contractor from any obligation or responsibility.

The Contractor shall give notice to the Engineer whenever any work is ready and before it is covered up, put out of sight, or packaged for storage or transport. The Engineer shall then either carry out the examination, inspection, measurement or testing without unreasonable delay, or promptly give notice to the Contractor that the Engineer does not require to do so. If the Contractor fails to give the notice, he shall, if and when required by the Engineer, uncover the work and thereafter reinstate and make good, all at the Contractor's cost.

7.4 Testing

This Sub-Clause shall apply to all tests specified in the Contract, other than the Tests after Completion (if any).

Except as otherwise specified in the Contract, the Contractor shall provide all apparatus, assistance, documents and other information, electricity, equipment, fuel, consumables, instruments, labour, materials, and suitably qualified and experienced staff, as are necessary to carry out the specified tests efficiently. The Contractor shall agree, with the Engineer, the time and place for the specified testing of any Plant, Materials and other parts of the Works.

The Engineer may, under Clause 13 [Variations and Adjustments], vary the location or details of specified tests, or instruct the Contractor to carry out additional tests. If these varied or additional tests show that the tested Plant, Materials or workmanship is not in accordance with the Contract, the cost of carrying out this Variation shall be borne by the Contractor, notwithstanding other provisions of the Contract.

The Engineer shall give the Contractor not less than 24 hours' notice of the Engineer's intention to attend the tests. If the Engineer does not attend at the time and place agreed, the Contractor may proceed with the tests, unless otherwise instructed by the Engineer, and the tests shall then be deemed to have been made in the Engineer's presence.

If the Contractor suffers delay and/or incurs Cost from complying with these instructions or as a result of a delay for which the Employer is responsible, the Contractor shall give notice to the Engineer and shall be entitled subject to Sub-Clause 20.1 [Contractor's Claims] to:

COPYRIGHT FIDIC JUNE 2010

(a) an extension of time for any such delay, if completion is or will be delayed, under Sub-Clause 8.4 [Extension of Time for Completion], and

(b) payment of any such Cost plus profit, which shall be included in the Contract Price.

After receiving this notice, the Engineer shall proceed in accordance with Sub-Clause 3.5 [Determinations] to agree or determine these matters.

The Contractor shall promptly forward to the Engineer duly certified reports of the tests. When the specified tests have been passed, the Engineer shall endorse the Contractor's test certificate, or issue a certificate to him, to that effect. If the Engineer has not attended the tests, he shall be deemed to have accepted the readings as accurate.

7.5 Rejection

If, as a result of an examination, inspection, measurement or testing, any Plant, Materials or workmanship is found to be defective or otherwise not in accordance with the Contract, the Engineer may reject the Plant, Materials or workmanship by giving notice to the Contractor, with reasons. The Contractor shall then promptly make good the defect and ensure that the rejected item complies with the Contract.

If the Engineer requires this Plant, Materials or workmanship to be retested, the tests shall be repeated under the same terms and conditions. If the rejection and retesting cause the Employer to incur additional costs, the Contractor shall subject to Sub-Clause 2.5 [Employer's Claims] pay these costs to the Employer.

7.6 Remedial Work

Notwithstanding any previous test or certification, the Engineer may instruct the Contractor to:

(a) remove from the Site and replace any Plant or Materials which is not in accordance with the Contract,

(b) remove and re-execute any other work which is not in accordance with the Contract, and

(c) execute any work which is urgently required for the safety of the Works, whether because of an accident, unforeseeable event or otherwise.

The Contractor shall comply with the instruction within a reasonable time, which shall be the time (if any) specified in the instruction, or immediately if urgency is specified under sub-paragraph (c).

If the Contractor fails to comply with the instruction, the Employer shall be entitled to employ and pay other persons to carry out the work. Except to the extent that the Contractor would have been entitled to payment for the work, the Contractor shall subject to Sub-Clause 2.5 [Employer's Claims] pay to the Employer all costs arising from this failure.

7.7 Ownership of Plant and Materials

Except as otherwise provided in the Contract, each item of Plant and Materials shall, to the extent consistent with the Laws of the Country, become the property of the Employer at whichever is the earlier of the following times, free from liens and other encumbrances:

(a) when it is incorporated in the Works;

(b) when the Contractor is paid the corresponding value of the Plant and Materials under Sub-Clause 8.10 [Payment for Plant and Materials in Event of Suspension].

7.8 Royalties

Unless otherwise stated in the Specification, the Contractor shall pay all royalties, rents and other payments for:

(a) natural Materials obtained from outside the Site, and

(b) the disposal of material from demolitions and excavations and of other surplus material (whether natural or man-made), except to the extent that disposal areas within the Site are specified in the Contract.

8 Commencement, Delays and Suspension

8.1 Commencement of Works

Except as otherwise specified in the Particular Conditions of Contract, the Commencement Date shall be the date at which the following precedent conditions have all been fulfilled and the Engineer's notification recording the agreement of both Parties on such fulfilment and instructing to commence the Work is received by the Contractor:

(a) signature of the Contract Agreement by both Parties, and if required, approval of the Contract by relevant authorities of the Country;

(b) delivery to the Contractor of reasonable evidence of the Employer's financial arrangements (under Sub-Clause 2.4 [Employer's Financial Arrangements]);

(c) except if otherwise specified in the Contract Data, effective access to and possession of the Site given to the Contractor together with such permission(s) under (a) of Sub-Clause 1.13 [Compliance with Laws] as required for the commencement of the Works;

(d) receipt by the Contractor of the Advance Payment under Sub-Clause 14.2 [Advance Payment] provided that the corresponding bank guarantee has been delivered by the Contractor.

If the said Engineer's instruction is not received by the Contractor within 180 days from his receipt of the Letter of Acceptance, the Contractor shall be entitled to terminate the Contract under Sub-Clause 16.2 [Termination by Contractor].

The Contractor shall commence the execution of the Works as soon as is reasonably practicable after the Commencement Date, and shall then proceed with the Works with due expedition and without delay.

8.2 Time for Completion

The Contractor shall complete the whole of the Works, and each Section (if any), within the Time for Completion for the Works or Section (as the case may be), including:

(a) achieving the passing of the Tests on Completion, and

(b) completing all work which is stated in the Contract as being required for the Works or Section to be considered to be completed for the purposes of taking-over under Sub-Clause 10.1 [Taking Over of the Works and Sections].

8.3 Programme

The Contractor shall submit a detailed time programme to the Engineer within 28 days after receiving the notice under Sub-Clause 8.1 [Commencement of Works]. The Contractor shall also submit a revised programme whenever the previous programme is inconsistent with actual progress or with the Contractor's obligations. Each programme shall include:

(a) the order in which the Contractor intends to carry out the Works, including the anticipated timing of each stage of design (if any), Contractor's Documents, procurement, manufacture of Plant, delivery to Site, construction, erection and testing,

(b) each of these stages for work by each nominated Subcontractor (as defined in Clause 5 [Nominated Subcontractors]),

(c) the sequence and timing of inspections and tests specified in the Contract, and

(d) a supporting report which includes:

(i) a general description of the methods which the Contractor intends to adopt, and of the major stages, in the execution of the Works, and

(ii) details showing the Contractor's reasonable estimate of the number of each class of Contractor's Personnel and of each type of Contractor's Equipment, required on the Site for each major stage.

Unless the Engineer, within 21 days after receiving a programme, gives notice to the Contractor stating the extent to which it does not comply with the Contract, the Contractor shall proceed in accordance with the programme, subject to his other obligations under the Contract. The Employer's Personnel shall be entitled to rely upon the programme when planning their activities.

The Contractor shall promptly give notice to the Engineer of specific probable future events or circumstances which may adversely affect the work, increase the Contract Price or delay the execution of the Works. The Engineer may require the Contractor to submit an estimate of the anticipated effect of the future event or circumstances, and/or a proposal under Sub-Clause 13.3 [Variation Procedure].

If, at any time, the Engineer gives notice to the Contractor that a programme fails (to the extent stated) to comply with the Contract or to be consistent with actual progress and the Contractor's stated intentions, the Contractor shall submit a revised programme to the Engineer in accordance with this Sub-Clause.

8.4 Extension of Time for Completion

The Contractor shall be entitled subject to Sub-Clause 20.1 [Contractor's Claims] to an extension of the Time for Completion if and to the extent that completion for the purposes of Sub-Clause 10.1 [Taking Over of the Works and Sections] is or will be delayed by any of the following causes:

(a) a Variation (unless an adjustment to the Time for Completion has been agreed under Sub-Clause 13.3 [Variation Procedure]) or other substantial change in the quantity of an item of work included in the Contract,

(b) a cause of delay giving an entitlement to extension of time under a Sub-Clause of these Conditions,

(c) exceptionally adverse climatic conditions,

(d) Unforeseeable shortages in the availability of personnel or Goods caused by epidemic or governmental actions, or

(e) any delay, impediment or prevention caused by or attributable to the Employer, the Employer's Personnel, or the Employer's other contractors.

If the Contractor considers himself to be entitled to an extension of the Time for Completion, the Contractor shall give notice to the Engineer in accordance with Sub-Clause 20.1 [Contractor's Claims]. When determining each extension of time under Sub-Clause 20.1, the Engineer shall review previous determinations and may increase, but shall not decrease, the total extension of time.

8.5 Delays Caused by Authorities

If the following conditions apply, namely:

(a) the Contractor has diligently followed the procedures laid down by the relevant legally constituted public authorities in the Country,

(b) these authorities delay or disrupt the Contractor's work, and

(c) the delay or disruption was Unforeseeable,

then this delay or disruption will be considered as a cause of delay under sub-paragraph (b) of Sub-Clause 8.4 [Extension of Time for Completion].

8.6 Rate of Progress

If, at any time:

(a) actual progress is too slow to complete within the Time for Completion, and/or

(b) progress has fallen (or will fall) behind the current programme under Sub-Clause 8.3 [Programme],

other than as a result of a cause listed in Sub-Clause 8.4 [Extension of Time for Completion], then the Engineer may instruct the Contractor to submit, under Sub-Clause 8.3 [Programme], a revised programme and supporting report describing the revised methods which the Contractor proposes to adopt in order to expedite progress and complete within the Time for Completion.

Unless the Engineer notifies otherwise, the Contractor shall adopt these revised methods, which may require increases in the working hours and/or in the numbers of Contractor's Personnel and/or Goods, at the risk and cost of the Contractor. If these revised methods cause the Employer to incur additional costs, the Contractor shall subject to notice under Sub-Clause 2.5 [Employer's Claims] pay these costs to the Employer, in addition to delay damages (if any) under Sub-Clause 8.7 below.

Additional costs of revised methods including acceleration measures, instructed by the Engineer to reduce delays resulting from causes listed under Sub-Clause 8.4 [Extension of Time for Completion] shall be paid by the Employer, without generating, however, any other additional payment benefit to the Contractor.

8.7 Delay Damages

If the Contractor fails to comply with Sub-Clause 8.2 [Time for Completion], the Contractor shall subject to notice under Sub-Clause 2.5 [Employer's Claims] pay delay damages to the Employer for this default. These delay damages shall be the sum stated in the Contract Data, which shall be paid for every day which shall elapse between the relevant Time for Completion and the date stated in the Taking-Over Certificate. However, the total amount due under this Sub-Clause shall not exceed the maximum amount of delay damages (if any) stated in the Contract Data.

These delay damages shall be the only damages due from the Contractor for such default, other than in the event of termination under Sub-Clause 15.2 [Termination by Employer] prior to completion of the Works. These damages shall not relieve the Contractor from his obligation to complete the Works, or from any other duties, obligations or responsibilities which he may have under the Contract.

8.8 Suspension of Work

The Engineer may at any time instruct the Contractor to suspend progress of part or all of the Works. During such suspension, the Contractor shall protect, store and secure such part or the Works against any deterioration, loss or damage.

The Engineer may also notify the cause for the suspension. If and to the extent that the cause is notified and is the responsibility of the Contractor, the following Sub-Clauses 8.9, 8.10 and 8.11 shall not apply.

8.9 Consequences of Suspension

If the Contractor suffers delay and/or incurs Cost from complying with the Engineer's instructions under Sub-Clause 8.8 [Suspension of Work] and/or from resuming the work, the Contractor shall give notice to the Engineer and shall be entitled subject to Sub-Clause 20.1 [Contractor's Claims] to:

(a) an extension of time for any such delay, if completion is or will be delayed, under Sub-Clause 8.4 [Extension of Time for Completion], and

(b) payment of any such Cost, which shall be included in the Contract Price.

After receiving this notice, the Engineer shall proceed in accordance with Sub-Clause 3.5 [Determinations] to agree or determine these matters.

The Contractor shall not be entitled to an extension of time for, or to payment of the Cost incurred in, making good the consequences of the Contractor's faulty design, workmanship or materials, or of the Contractor's failure to protect, store or secure in accordance with Sub-Clause 8.8 [Suspension of Work].

8.10 Payment for Plant and Materials in Event of Suspension

The Contractor shall be entitled to payment of the value (as at the date of suspension) of Plant and/or Materials which have not been delivered to Site, if:

(a) the work on Plant or delivery of Plant and/or Materials has been suspended for more than 28 days, and

(b) the Contractor has marked the Plant and/or Materials as the Employer's property in accordance with the Engineer's instructions.

8.11 Prolonged Suspension

If the suspension under Sub-Clause 8.8 [Suspension of Work] has continued for more than 84 days, the Contractor may request the Engineer's permission to proceed. If the Engineer does not give permission within 28 days after being requested to do so, the Contractor may, by giving notice to the Engineer, treat the suspension as an omission under Clause 13 [Variations and Adjustments] of the affected part of the Works. If the suspension affects the whole of the Works, the Contractor may give notice of termination under Sub-Clause 16.2 [Termination by Contractor].

8.12 Resumption of Work

After the permission or instruction to proceed is given, the Contractor and the Engineer shall jointly examine the Works and the Plant and Materials affected by the suspension. The Contractor shall make good any deterioration or defect in or loss of the Works or Plant or Materials, which has occurred during the suspension after receiving from the Engineer an instruction to this effect under Clause 13 [Variations and Adjustments].

9 Tests on Completion

9.1 Contractor's Obligations

The Contractor shall carry out the Tests on Completion in accordance with this Clause and Sub-Clause 7.4 [Testing], after providing the documents in accordance with sub-paragraph (d) of Sub-Clause 4.1 [Contractor's General Obligations].

The Contractor shall give to the Engineer not less than 21 days' notice of the date after which the Contractor will be ready to carry out each of the Tests on Completion. Unless otherwise agreed, Tests on Completion shall be carried out within 14 days after this date, on such day or days as the Engineer shall instruct.

In considering the results of the Tests on Completion, the Engineer shall make allowances for the effect of any use of the Works by the Employer on the performance or other characteristics of the Works. As soon as the Works, or a Section, have passed any Tests on Completion, the Contractor shall submit a certified report of the results of these Tests to the Engineer.

9.2 Delayed Tests

If the Tests on Completion are being unduly delayed by the Employer, Sub-Clause 7.4 [Testing] (fifth paragraph) and/or Sub-Clause 10.3 [Interference with Tests on Completion] shall be applicable.

If the Tests on Completion are being unduly delayed by the Contractor, the Engineer may by notice require the Contractor to carry out the Tests within 21 days after receiving the notice. The Contractor shall carry out the Tests on such day or days within that period as the Contractor may fix and of which he shall give notice to the Engineer.

If the Contractor fails to carry out the Tests on Completion within the period of 21 days, the Employer's Personnel may proceed with the Tests at the risk and cost of the Contractor. The Tests on Completion shall then be deemed to have been carried out in the presence of the Contractor and the results of the Tests shall be accepted as accurate.

9.3 Retesting

If the Works, or a Section, fail to pass the Tests on Completion, Sub-Clause 7.5 [Rejection] shall apply, and the Engineer or the Contractor may require the failed Tests, and Tests on Completion on any related work, to be repeated under the same terms and conditions.

9.4 Failure to Pass Tests on Completion

If the Works, or a Section, fail to pass the Tests on Completion repeated under Sub-Clause 9.3 [Retesting], the Engineer shall be entitled to:

(a) order further repetition of Tests on Completion under Sub-Clause 9.3;

(b) if the failure deprives the Employer of substantially the whole benefit of the Works or Section, reject the Works or Section (as the case may be), in which event the Employer shall have the same remedies as are provided in sub-paragraph (c) of Sub-Clause 11.4 [Failure to Remedy Defects]; or

(c) issue a Taking-Over Certificate, if the Employer so requests.

In the event of sub-paragraph (c), the Contractor shall proceed in accordance with all other obligations under the Contract, and the Contract Price shall be reduced by such amount as shall be appropriate to cover the reduced value to the Employer as a result of this failure. Unless the relevant reduction for this failure is stated (or its method of calculation is defined) in the Contract, the Employer may require the reduction to be (i) agreed by both Parties (in full satisfaction of this failure only) and paid before this Taking-Over Certificate is issued, or (ii) determined and paid under Sub-Clause 2.5 [Employer's Claims] and Sub-Clause 3.5 [Determinations].

10 Employer's Taking Over

10.1 Taking Over of the Works and Sections

Except as stated in Sub-Clause 9.4 [Failure to Pass Tests on Completion], the Works shall be taken over by the Employer when (i) the Works have been completed in accordance with the Contract, including the matters described in Sub-Clause 8.2 [Time for Completion] and except as allowed in sub-paragraph (a) below, and (ii) a Taking-Over Certificate for the Works has been issued, or is deemed to have been issued in accordance with this Sub-Clause.

The Contractor may apply by notice to the Engineer for a Taking-Over Certificate not earlier than 14 days before the Works will, in the Contractor's opinion, be complete and ready for taking over. If the Works are divided into Sections, the Contractor may similarly apply for a Taking-Over Certificate for each Section.

The Engineer shall, within 28 days after receiving the Contractor's application:

(a) issue the Taking-Over Certificate to the Contractor, stating the date on which the Works or Section were completed in accordance with the Contract, except for any minor outstanding work and defects which will not substantially affect the use of the Works or Section for their intended purpose (either until or whilst this work is completed and these defects are remedied); or

(b) reject the application, giving reasons and specifying the work required to be done by the Contractor to enable the Taking-Over Certificate to be issued. The Contractor shall then complete this work before issuing a further notice under this Sub-Clause.

If the Engineer fails either to issue the Taking-Over Certificate or to reject the Contractor's application within the period of 28 days, and if the Works or Section (as the case may be) are substantially in accordance with the Contract, the Taking-Over Certificate shall be deemed to have been issued on the last day of that period.

10.2 Taking Over of Parts of the Works

The Engineer may, at the sole discretion of the Employer, issue a Taking-Over Certificate for any part of the Permanent Works.

The Employer shall not use any part of the Works (other than as a temporary measure which is either specified in the Contract or agreed by both Parties) unless and until the Engineer has issued a Taking-Over Certificate for this part. However, if the Employer does use any part of the Works before the Taking-Over Certificate is issued:

(a) the part which is used shall be deemed to have been taken over as from the date on which it is used,

(b) the Contractor shall cease to be liable for the care of such part as from this date, when responsibility shall pass to the Employer, and

(c) if requested by the Contractor, the Engineer shall issue a Taking-Over Certificate for this part.

After the Engineer has issued a Taking-Over Certificate for a part of the Works, the Contractor shall be given the earliest opportunity to take such steps as may be necessary to carry out any outstanding Tests on Completion. The Contractor shall carry out these Tests on Completion as soon as practicable before the expiry date of the relevant Defects Notification Period.

If the Contractor incurs Cost as a result of the Employer taking over and/or using a part of the Works, other than such use as is specified in the Contract or agreed by the Contractor, the Contractor shall (i) give notice to the Engineer and (ii) be entitled subject to Sub-Clause 20.1 [Contractor's Claims] to payment of any such Cost plus profit, which shall be included in the Contract Price. After receiving this notice, the Engineer shall proceed in accordance with Sub-Clause 3.5 [Determinations] to agree or determine this Cost and profit.

If a Taking-Over Certificate has been issued for a part of the Works (other than a Section), the delay damages thereafter for completion of the remainder of the Works shall be reduced. Similarly, the delay damages for the remainder of the Section (if any) in which this part is included shall also be reduced. For any period of delay after the date stated in this Taking-Over Certificate, the proportional reduction in these delay damages shall be calculated as the proportion which the value of the part so certified bears to the value of the Works or Section (as the case may be) as a whole. The Engineer shall proceed in accordance with Sub-Clause 3.5 [Determinations] to agree or determine these proportions. The provisions of this paragraph shall only apply to the daily rate of delay damages under Sub-Clause 8.7 [Delay Damages], and shall not affect the maximum amount of these damages.

10.3 Interference with Tests on Completion

If the Contractor is prevented, for more than 14 days, from carrying out the Tests on Completion by a cause for which the Employer is responsible, the Employer shall be deemed to have taken over the Works or Section (as the case may be) on the date when the Tests on Completion would otherwise have been completed.

The Engineer shall then issue a Taking-Over Certificate accordingly, and the Contractor shall carry out the Tests on Completion as soon as practicable, before the expiry date of the Defects Notification Period. The Engineer shall require the Tests on Completion to be carried out by giving 14 days' notice and in accordance with the relevant provisions of the Contract.

If the Contractor suffers delay and/or incurs Cost as a result of this delay in carrying out the Tests on Completion, the Contractor shall give notice to the Engineer and shall be entitled subject to Sub-Clause 20.1 [Contractor's Claims] to:

(a) an extension of time for any such delay, if completion is or will be delayed, under Sub-Clause 8.4 [Extension of Time for Completion], and

(b) payment of any such Cost plus profit, which shall be included in the Contract Price.

After receiving this notice, the Engineer shall proceed in accordance with Sub-Clause 3.5 [Determinations] to agree or determine these matters.

10.4 Surfaces Requiring Reinstatement

Except as otherwise stated in a Taking-Over Certificate, a certificate for a Section or part of the Works shall not be deemed to certify completion of any ground or other surfaces requiring reinstatement.

11 Defects Liability

11.1 Completion of Outstanding Work and Remedying Defects

In order that the Works and Contractor's Documents, and each Section, shall be in the condition required by the Contract (fair wear and tear excepted) by the expiry date of the relevant Defects Notification Period or as soon as practicable thereafter, the Contractor shall:

(a) complete any work which is outstanding on the date stated in a Taking-Over Certificate, within such reasonable time as is instructed by the Engineer, and

(b) execute all work required to remedy defects or damage, as may be notified by (or on behalf of) the Employer on or before the expiry date of the Defects Notification Period for the Works or Section (as the case may be).

If a defect appears or damage occurs, the Contractor shall be notified accordingly, by (or on behalf of) the Employer.

11.2 Cost of Remedying Defects

All work referred to in sub-paragraph (b) of Sub-Clause 11.1 [Completion of Outstanding Work and Remedying Defects] shall be executed at the risk and cost of the Contractor, if and to the extent that the work is attributable to:

(a) any design for which the Contractor is responsible,

(b) Plant, Materials or workmanship not being in accordance with the Contract, or

(c) failure by the Contractor to comply with any other obligation.

If and to the extent that such work is attributable to any other cause, the Contractor shall be notified promptly by (or on behalf of) the Employer, and Sub-Clause 13.3 [Variation Procedure] shall apply.

11.3 Extension of Defects Notification Period

The Employer shall be entitled subject to Sub-Clause 2.5 [Employer's Claims] to an extension of the Defects Notification Period for the Works or a Section if and to the extent that the Works, Section or a major item of Plant (as the case may be, and after taking over) cannot be used for the purposes for which they are intended by reason of a defect or by reason of damage attributable to the Contractor. However, a Defects Notification Period shall not be extended by more than two years.

If delivery and/or erection of Plant and/or Materials was suspended under Sub-Clause 8.8 [Suspension of Work] or Sub-Clause 16.1 [Contractor's Entitlement to Suspend Work], the Contractor's obligations under this Clause shall not apply to any defects or damage occurring more than two years after the Defects Notification Period for the Plant and/or Materials would otherwise have expired.

11.4 Failure to Remedy Defects

If the Contractor fails to remedy any defect or damage within a reasonable time, a date may be fixed by (or on behalf of) the Employer, on or by which the defect or damage is to be remedied. The Contractor shall be given reasonable notice of this date.

If the Contractor fails to remedy the defect or damage by this notified date and this remedial work was to be executed at the cost of the Contractor under Sub-Clause 11.2 [Cost of Remedying Defects], the Employer may (at his option):

(a) carry out the work himself or by others, in a reasonable manner and at the Contractor's cost, but the Contractor shall have no responsibility for this work; and the Contractor shall subject to Sub-Clause 2.5 [Employer's Claims] pay to the Employer the costs reasonably incurred by the Employer in remedying the defect or damage;

(b) require the Engineer to agree or determine a reasonable reduction in the Contract Price in accordance with Sub-Clause 3.5 [Determinations]; or

(c) if the defect or damage deprives the Employer of substantially the whole benefit of the Works or any major part of the Works, terminate the Contract as a whole, or in respect of such major part which cannot be put to the intended use. Without prejudice to any other rights, under the Contract or otherwise, the Employer shall then be entitled to recover all sums paid for the Works or for such part (as the case may be), plus financing costs and the cost of dismantling the same, clearing the Site and returning Plant and Materials to the Contractor.

11.5 Removal of Defective Work

If the defect or damage cannot be remedied expeditiously on the Site and the Employer gives consent, the Contractor may remove from the Site for the purposes of repair such items of Plant as are defective or damaged. This consent may require the Contractor to increase the amount of the Performance Security by the full replacement cost of these items, or to provide other appropriate security.

11.6 Further Tests

If the work of remedying of any defect or damage may affect the performance of the Works, the Engineer may require the repetition of any of the tests described in the Contract. The requirement shall be made by notice within 28 days after the defect or damage is remedied.

These tests shall be carried out in accordance with the terms applicable to the previous tests, except that they shall be carried out at the risk and cost of the Party liable, under Sub-Clause 11.2 [Cost of Remedying Defects], for the cost of the remedial work.

11.7 Right of Access

Until the Performance Certificate has been issued, the Contractor shall have such right of access to the Works as is reasonably required in order to comply with this Clause, except as may be inconsistent with the Employer's reasonable security restrictions.

11.8 Contractor to Search

The Contractor shall, if required by the Engineer, search for the cause of any defect, under the direction of the Engineer. Unless the defect is to be remedied at the cost of the Contractor under Sub-Clause 11.2 [Cost of Remedying Defects], the Cost of the search plus profit shall be agreed or determined by the Engineer in accordance with Sub-Clause 3.5 [Determinations] and shall be included in the Contract Price.

11.9 Performance Certificate

Performance of the Contractor's obligations shall not be considered to have been completed until the Engineer has issued the Performance Certificate to the Contractor, stating the date on which the Contractor completed his obligations under the Contract.

The Engineer shall issue the Performance Certificate within 28 days after the latest of the expiry dates of the Defects Notification Periods, or as soon thereafter as the Contractor has supplied all the Contractor's Documents and completed and tested all the Works, including remedying any defects. A copy of the Performance Certificate shall be issued to the Employer.

Only the Performance Certificate shall be deemed to constitute acceptance of the Works.

11.10 Unfulfilled Obligations

After the Performance Certificate has been issued, each Party shall remain liable for the fulfilment of any obligation which remains unperformed at that time. For the purposes of determining the nature and extent of unperformed obligations, the Contract shall be deemed to remain in force.

11.11 Clearance of Site

Upon receiving the Performance Certificate, the Contractor shall remove any remaining Contractor's Equipment, surplus material, wreckage, rubbish and Temporary Works from the Site.

If all these items have not been removed within 28 days after receipt by the Contractor of the Performance Certificate, the Employer may sell or otherwise dispose of any remaining items. The Employer shall be entitled to be paid the costs incurred in connection with, or attributable to, such sale or disposal and restoring the Site.

Any balance of the moneys from the sale shall be paid to the Contractor. If these moneys are less than the Employer's costs, the Contractor shall pay the outstanding balance to the Employer.

12 Measurement and Evaluation

12.1 Works to be Measured

The Works shall be measured, and valued for payment, in accordance with this Clause. The Contractor shall show in each application under Sub-Clauses 14.3 [Application for Interim Payment Certificates], 14.10 [Statement on Completion] and 14.11 [Application for Final Payment Certificate] the quantities and other particulars detailing the amounts which he considers to be entitled under the Contract.

Whenever the Engineer requires any part of the Works to be measured, reasonable notice shall be given to the Contractor's Representative, who shall:

(a) promptly either attend or send another qualified representative to assist the Engineer in making the measurement, and

(b) supply any particulars requested by the Engineer.

If the Contractor fails to attend or send a representative, the measurement made by (or on behalf of) the Engineer shall be accepted as accurate.

Except as otherwise stated in the Contract, wherever any Permanent Works are to be measured from records, these shall be prepared by the Engineer. The Contractor shall, as and when requested, attend to examine and agree the records with the Engineer, and shall sign the same when agreed. If the Contractor does not attend, the records shall be accepted as accurate.

If the Contractor examines and disagrees the records, and/or does not sign them as agreed, then the Contractor shall give notice to the Engineer of the respects in which the records are asserted to be inaccurate. After receiving this notice, the Engineer shall review the records and either confirm or vary them and certify the payment of the undisputed part. If the Contractor does not so give notice to the Engineer within 14 days after being requested to examine the records, they shall be accepted as accurate.

12.2 Method of Measurement

Except as otherwise stated in the Contract and notwithstanding local practice:

(a) measurement shall be made of the net actual quantity of each item of the Permanent Works, and

(b) the method of measurement shall be in accordance with the Bill of Quantities or other applicable Schedules.

12.3 Evaluation

Except as otherwise stated in the Contract, the Engineer shall proceed in accordance with Sub-Clause 3.5 [Determinations] to agree or determine the Contract Price by evaluating each item of work, applying the measurement agreed or determined in accordance with the above Sub-Clauses 12.1 and 12.2 and the appropriate rate or price for the item.

For each item of work, the appropriate rate or price for the item shall be the rate or price specified for such item in the Contract or, if there is no such item, specified for similar work.

Any item of work included in the Bill of Quantities for which no rate or price was specified shall be considered as included in other rates and prices in the Bill of Quantities and will not be paid for separately.

However, a new rate or price shall be appropriate for an item of work if:

(a) (i) the measured quantity of the item is changed by more than 25% from the quantity of this item in the Bill of Quantities or other Schedule,

(ii) this change in quantity multiplied by such specified rate for this item exceeds 0.25% of the Accepted Contract Amount,

(iii) this change in quantity directly changes the Cost per unit quantity of this item by more than 1%, and

(iv) this item is not specified in the Contract as a "fixed rate item";

or

(b) (i) the work is instructed under Clause 13 [Variations and Adjustments],

(ii) no rate or price is specified in the Contract for this item, and

(iii) no specified rate or price is appropriate because the item of work is not of similar character, or is not executed under similar conditions, as any item in the Contract.

Each new rate or price shall be derived from any relevant rates or prices in the Contract, with reasonable adjustments to take account of the matters described in sub-paragraph (a) and/or (b), as applicable. If no rates or prices are relevant for the derivation of a new rate or price, it shall be derived from the reasonable Cost of executing the work, together with profit, taking account of any other relevant matters.

Until such time as an appropriate rate or price is agreed or determined, the Engineer shall determine a provisional rate or price for the purposes of Interim Payment Certificates as soon as the concerned work commences.

12.4 Omissions

Whenever the omission of any work forms part (or all) of a Variation, the value of which has not been agreed, if:

(a) the Contractor will incur (or has incurred) cost which, if the work had not been omitted, would have been deemed to be covered by a sum forming part of the Accepted Contract Amount;

(b) the omission of the work will result (or has resulted) in this sum not forming part of the Contract Price; and

(c) this cost is not deemed to be included in the evaluation of any substituted work;

then the Contractor shall give notice to the Engineer accordingly, with supporting particulars. Upon receiving this notice, the Engineer shall proceed in accordance with Sub-Clause 3.5 [Determinations] to agree or determine this cost, which shall be included in the Contract Price.

13 Variations and Adjustments

13.1 Right to Vary

Variations may be initiated by the Engineer at any time prior to issuing the Taking-Over Certificate for the Works, either by an instruction or by a request for the Contractor to submit a proposal.

The Contractor shall execute and be bound by each Variation, unless the Contractor promptly gives notice to the Engineer stating (with supporting particulars) that (i) the Contractor cannot readily obtain the Goods required for the Variation, or (ii) such Variation triggers a substantial change in the sequence or progress of the Works. Upon receiving this notice, the Engineer shall cancel, confirm or vary the instruction.

Each Variation may include:

(a) changes to the quantities of any item of work included in the Contract (however, such changes do not necessarily constitute a Variation),

(b) changes to the quality and other characteristics of any item of work,

(c) changes to the levels, positions and/or dimensions of any part of the Works,

(d) omission of any work unless it is to be carried out by others,

(e) any additional work, Plant, Materials or services necessary for the Permanent Works, including any associated Tests on Completion, boreholes and other testing and exploratory work, or

(f) changes to the sequence or timing of the execution of the Works.

The Contractor shall not make any alteration and/or modification of the Permanent Works, unless and until the Engineer instructs or approves a Variation.

13.2 Value Engineering

The Contractor may, at any time, submit to the Engineer a written proposal which (in the Contractor's opinion) will, if adopted, (i) accelerate completion, (ii) reduce the cost to the Employer of executing, maintaining or operating the Works, (iii) improve the efficiency or value to the Employer of the completed Works, or (iv) otherwise be of benefit to the Employer.

The proposal shall be prepared at the cost of the Contractor and shall include the items listed in Sub-Clause 13.3 [Variation Procedure].

If a proposal, which is approved by the Engineer, includes a change in the design of part of the Permanent Works, then unless otherwise agreed by both Parties:

(a) the Contractor shall design this part,

(b) sub-paragraphs (a) to (d) of Sub-Clause 4.1 [Contractor's General Obligations] shall apply, and

(c) if this change results in a reduction in the contract value of this part, the Engineer shall proceed in accordance with Sub-Clause 3.5 [Determinations] to agree or determine a fee, which shall be included in the Contract Price. This fee shall be half (50%) of the difference between the following amounts:

    (i) such reduction in contract value, resulting from the change, excluding adjustments under Sub-Clause 13.7 [Adjustments for Changes in Legislation] and Sub-Clause 13.8 [Adjustments for Changes in Cost], and

    (ii) the reduction (if any) in the value to the Employer of the varied works, taking account of any reductions in quality, anticipated life or operational efficiencies.

However, if amount (i) is less than amount (ii), there shall not be a fee.

13.3 Variation Procedure

If the Engineer requests a proposal, prior to instructing a Variation, the Contractor shall respond in writing as soon as practicable, either by giving reasons why he cannot comply (if this is the case) or by submitting:

(a) a description of the proposed work to be performed and a programme for its execution,

(b) the Contractor's proposal for any necessary modifications to the programme according to Sub-Clause 8.3 [Programme] and to the Time for Completion, and

(c) the Contractor's proposal for evaluation of the Variation.

The Engineer shall, as soon as practicable after receiving such proposal (under Sub-Clause 13.2 [Value Engineering] or otherwise), respond with approval, disapproval or comments. The Contractor shall not delay any work whilst awaiting a response.

Each instruction to execute a Variation, with any requirements for the recording of Costs, shall be issued by the Engineer to the Contractor, who shall acknowledge receipt.

Each Variation shall be evaluated in accordance with Clause 12 [Measurement and Evaluation], unless the Engineer instructs or approves otherwise in accordance with this Clause.

13.4 Payment in Applicable Currencies

If the Contract provides for payment of the Contract Price in more than one currency, then whenever an adjustment is agreed, approved or determined as stated above, the amount payable in each of the applicable currencies shall be specified. For this purpose, reference shall be made to the actual or expected currency proportions of the Cost of the varied work, and to the proportions of various currencies specified for payment of the Contract Price.

13.5 Provisional Sums

Each Provisional Sum shall only be used, in whole or in part, in accordance with the Engineer's instructions, and the Contract Price shall be adjusted accordingly. The total sum paid to the Contractor shall include only such amounts, for the work, supplies or services to which the Provisional Sum relates, as the Engineer shall have instructed. For each Provisional Sum, the Engineer may instruct:

(a) work to be executed (including Plant, Materials or services to be supplied) by the Contractor and valued under Sub-Clause 13.3 [Variation Procedure]; and/or

(b) Plant, Materials or services to be purchased by the Contractor, from a nominated Subcontractor (as defined in Clause 5 [Nominated Subcontractors]) or otherwise; and for which there shall be included in the Contract Price:

  (i) the actual amounts paid (or due to be paid) by the Contractor, and

  (ii) a sum for overhead charges and profit, calculated as a percentage of these actual amounts by applying the relevant percentage rate (if any) stated in the appropriate Schedule. If there is no such rate, the percentage rate stated in the Contract Data shall be applied.

The Contractor shall, when required by the Engineer, produce quotations, invoices, vouchers and accounts or receipts in substantiation.

13.6 Daywork

For work of a minor or incidental nature, the Engineer may instruct that a Variation shall be executed on a daywork basis. The work shall then be valued in accordance with the Daywork Schedule included in the Contract, and the following procedure shall apply. If a Daywork Schedule is not included in the Contract, this Sub-Clause shall not apply.

Before ordering Goods for the work, the Contractor shall submit quotations to the Engineer. When applying for payment, the Contractor shall submit invoices, vouchers and accounts or receipts for any Goods.

Except for any items for which the Daywork Schedule specifies that payment is not due, the Contractor shall deliver each day to the Engineer accurate statements in duplicate which shall include the following details of the resources used in executing the previous day's work:

(a) the names, occupations and time of Contractor's Personnel,

(b) the identification, type and time of Contractor's Equipment and Temporary Works, and

(c) the quantities and types of Plant and Materials used.

One copy of each statement will, if correct, or when agreed, be signed by the Engineer and returned to the Contractor. The Contractor shall then submit priced statements of these resources to the Engineer, prior to their inclusion in the next Statement under Sub-Clause 14.3 [Application for Interim Payment Certificates].

13.7 Adjustments for Changes in Legislation

The Contract Price shall be adjusted to take account of any increase or decrease in Cost resulting from a change in the Laws of the Country (including the introduction of new Laws and the repeal or modification of existing Laws) or in the judicial or official governmental interpretation of such Laws, made after the Base Date, which affect the Contractor in the performance of obligations under the Contract.

If the Contractor suffers (or will suffer) delay and/or incurs (or will incur) additional Cost as a result of these changes in the Laws or in such interpretations, made after the Base Date, the Contractor shall give notice to the Engineer and shall be entitled subject to Sub-Clause 20.1 [Contractor's Claims] to:

(a) an extension of time for any such delay, if completion is or will be delayed, under Sub-Clause 8.4 [Extension of Time for Completion], and

(b) payment of any such Cost, which shall be included in the Contract Price.

After receiving this notice, the Engineer shall proceed in accordance with Sub-Clause 3.5 [Determinations] to agree or determine these matters.

Notwithstanding the foregoing, the Contractor shall not be entitled to an extension of time if the relevant delay has already been taken into account in the determination of a previous extension of time and such Cost shall not be separately paid if the same shall already have been taken into account in the indexing of any inputs to the table of adjustment data in accordance with the provisions of Sub-Clause 13.8 [Adjustments for Changes in Cost].

13.8 Adjustments for Changes in Cost

In this Sub-Clause, "table of adjustment data" means the completed table of adjustment data for local and foreign currencies included in the Schedules. If there is no such table of adjustment data, this Sub-Clause shall not apply.

If this Sub-Clause applies, the amounts payable to the Contractor shall be adjusted for rises or falls in the cost of labour, Goods and other inputs to the Works, by the addition or deduction of the amounts determined by the formulae prescribed in this Sub-Clause. To the extent that full compensation for any rise or fall in Costs is not covered by the provisions of this or other Clauses, the Accepted Contract Amount shall be deemed to have included amounts to cover the contingency of other rises and falls in costs.

The adjustment to be applied to the amount otherwise payable to the Contractor, as valued in accordance with the appropriate Schedule and certified in Payment Certificates, shall be determined from formulae for each of the currencies in which the Contract Price is payable. No adjustment is to be applied to work valued on the basis of Cost or current prices. The formulae shall be of the following general type:

Pn = a + b Ln/ Lo + c En/Eo + d Mn/Mo + ...

where:

"Pn" is the adjustment multiplier to be applied to the estimated contract value in the relevant currency of the work carried out in period "n", this period being a month unless otherwise stated in the Contract Data;

"a" is a fixed coefficient, stated in the relevant table of adjustment data, representing the non-adjustable portion in contractual payments;

"b", "c", "d", … are coefficients representing the estimated proportion of each cost element related to the execution of the Works, as stated in the relevant table of adjustment data; such tabulated cost elements may be indicative of resources such as labour, equipment and materials;

"Ln", "En", "Mn", … are the current cost indices or reference prices for period "n", expressed in the relevant currency of payment, each of which is applicable to the relevant tabulated cost element on the date 49 days prior to the last day of the period (to which the particular Payment Certificate relates); and

"Lo", "Eo", "Mo", … are the base cost indices or reference prices, expressed in the relevant currency of payment, each of which is applicable to the relevant tabulated cost element on the Base Date.

The cost indices or reference prices stated in the table of adjustment data shall be used. If their source is in doubt, it shall be determined by the Engineer. For this purpose, reference shall be made to the values of the indices at stated dates for the purposes of clarification of the source; although these dates (and thus these values) may not correspond to the base cost indices.

In cases where the "currency of index" is not the relevant currency of payment, each index shall be converted into the relevant currency of payment at the selling rate, established by the central bank of the Country, of this relevant currency on the above date for which the index is required to be applicable

Until such time as each current cost index is available, the Engineer shall determine a provisional index for the issue of Interim Payment Certificates. When a current cost index is available, the adjustment shall be recalculated accordingly.

If the Contractor fails to complete the Works within the Time for Completion, adjustment of prices thereafter shall be made using either (i) each index or price applicable on the date 49 days prior to the expiry of the Time for Completion of the Works, or (ii) the current index or price, whichever is more favourable to the Employer.

The weightings (coefficients) for each of the factors of cost stated in the table(s) of adjustment data shall only be adjusted if they have been rendered unreasonable, unbalanced or inapplicable, as a result of Variations.

14 Contract Price and Payment

14.1 The Contract Price

Unless otherwise stated in the Particular Conditions:

(a) the Contract Price shall be agreed or determined under Sub-Clause 12.3 [Evaluation] and be subject to adjustments in accordance with the Contract;

(b) the Contractor shall pay all taxes, duties and fees required to be paid by him under the Contract, and the Contract Price shall not be adjusted for any of these costs except as stated in Sub-Clause 13.7 [Adjustments for Changes in Legislation];

(c) any quantities which may be set out in the Bill of Quantities or other Schedule are estimated quantities and are not to be taken as the actual and correct quantities:

(i) of the Works which the Contractor is required to execute, or

(ii) for the purposes of Clause 12 [Measurement and Evaluation]; and

(d) the Contractor shall submit to the Engineer, within 28 days after the Commencement Date, a proposed breakdown of each lump sum price in the Schedules. The Engineer may take account of the breakdown when preparing Payment Certificates, but shall not be bound by it.

Notwithstanding the provisions of sub-paragraph (b), Contractor's Equipment, including essential spare parts therefor, imported by the Contractor for the sole purpose of executing the Contract shall be exempt from the payment of import duties and taxes upon importation.

14.2 Advance Payment

The Employer shall make an advance payment, as an interest-free loan for mobilisation and cash flow support, when the Contractor submits a guarantee in accordance with this Sub-Clause. The total advance payment, the number and timing of instalments (if more than one), and the applicable currencies and proportions, shall be as stated in the Contract Data.

Unless and until the Employer receives this guarantee, or if the total advance payment is not stated in the Contract Data, this Sub-Clause shall not apply.

The Engineer shall deliver to the Employer and to the Contractor an Interim Payment Certificate for the advance payment or its first instalment after receiving a Statement (under Sub-Clause 14.3 [Application for Interim Payment Certificates]) and after the Employer receives (i) the Performance Security in accordance with Sub-Clause 4.2 [Performance Security] and (ii) a guarantee in amounts and currencies equal to the advance payment. This guarantee shall be issued by a reputable bank or financial institution selected by the Contractor and shall be in the form annexed to the Particular Conditions or in another form approved by the Employer.

The Contractor shall ensure that the guarantee is valid and enforceable until the advance payment has been repaid, but its amount shall be progressively reduced by the amount repaid by the Contractor as indicated in the Payment Certificates. If the terms of the guarantee specify its expiry date, and the advance payment has not been repaid by the date 28 days prior to the expiry date, the Contractor shall extend the validity of the guarantee until the advance payment has been repaid.

Unless stated otherwise in the Contract Data, the advance payment shall be repaid through percentage deductions from the interim payments determined by the Engineer in accordance with Sub-Clause 14.6 [Issue of Interim Payment Certificates], as follows:

(a) deductions shall commence in the next interim Payment Certificate following that in which the total of all certified interim payments (excluding the advance payment and deductions and repayments of retention) exceeds 30 percent (30%)of the Accepted Contract Amount less Provisional Sums; and

(b) deductions shall be made at the amortisation rate stated in the Contract Data of the amount of each Interim Payment Certificate (excluding the advance payment and deductions for its repayments as well as deductions for retention money) in the currencies and proportions of the advance payment until such time as the advance payment has been repaid; provided that the advance payment shall be completely repaid prior to the time when 90 percent (90%) of the Accepted Contract Amount less Provisional Sums has been certified for payment.

If the advance payment has not been repaid prior to the issue of the Taking-Over Certificate for the Works or prior to termination under Clause 15 [Termination by Employer], Clause 16 [Suspension and Termination by Contractor] or Clause 19 [Force Majeure] (as the case may be), the whole of the balance then outstanding shall immediately become due and in case of termination under Clause 15 [Termination by Employer], except for Sub-Clause 15.5 [Employer's Entitlement to Termination for Convenience], payable by the Contractor to the Employer.

14.3 Application for Interim Payment Certificates

The Contractor shall submit a Statement in six copies to the Engineer after the end of each month, in a form approved by the Engineer, showing in detail the amounts to which the Contractor considers himself to be entitled, together with supporting documents which shall include the report on the progress during this month in accordance with Sub-Clause 4.21 [Progress Reports].

The Statement shall include the following items, as applicable, which shall be expressed in the various currencies in which the Contract Price is payable, in the sequence listed:

(a) the estimated contract value of the Works executed and the Contractor's Documents produced up to the end of the month (including Variations but excluding items described in sub-paragraphs (b) to (g) below);

(b) any amounts to be added and deducted for changes in legislation and changes in cost, in accordance with Sub-Clause 13.7 [Adjustments for Changes in Legislation] and Sub-Clause 13.8 [Adjustments for Changes in Cost];

(c) any amount to be deducted for retention, calculated by applying the percentage of retention stated in the Contract Data to the total of the above amounts, until the amount so retained by the Employer reaches the limit of Retention Money (if any) stated in the Contract Data;

(d) any amounts to be added for the advance payment (if more than one instalment) and to be deducted for its repayments in accordance with Sub-Clause 14.2 [Advance Payment];

(e) any amounts to be added and deducted for Plant and Materials in accordance with Sub-Clause 14.5 [Plant and Materials intended for the Works];

(f) any other additions or deductions which may have become due under the Contract or otherwise, including those under Clause 20 [Claims, Disputes and Arbitration]; and

(g) the deduction of amounts certified in all previous Payment Certificates.

14.4 Schedule of Payments

If the Contract includes a schedule of payments specifying the instalments in which the Contract Price will be paid, then unless otherwise stated in this schedule:

(a) the instalments quoted in this schedule of payments shall be the estimated contract values for the purposes of sub-paragraph (a) of Sub-Clause 14.3 [Application for Interim Payment Certificates];

(b) Sub-Clause 14.5 [Plant and Materials intended for the Works] shall not apply; and

(c) if these instalments are not defined by reference to the actual progress achieved in executing the Works, and if actual progress is found to be less or more than that on which this schedule of payments was based, then the Engineer may proceed in accordance with Sub-Clause 3.5 [Determinations] to agree or determine revised instalments, which shall take account of the extent to which progress is less or more than that on which the instalments were previously based.

If the Contract does not include a schedule of payments, the Contractor shall submit non-binding estimates of the payments which he expects to become due during each quarterly period. The first estimate shall be submitted within 42 days after the Commencement Date. Revised estimates shall be submitted at quarterly intervals, until the Taking-Over Certificate has been issued for the Works.

14.5 Plant and Materials intended for the Works

If this Sub-Clause applies, Interim Payment Certificates shall include, under sub-paragraph (e) of Sub-Clause 14.3, (i) an amount for Plant and Materials which have been sent to the Site for incorporation in the Permanent Works, and (ii) a reduction when the contract value of such Plant and Materials is included as part of the Permanent Works under sub-paragraph (a) of Sub-Clause 14.3 [Application for Interim Payment Certificates].

If the lists referred to in sub-paragraphs (b)(i) or (c)(i) below are not included in the Schedules this Sub-Clause shall not apply.

The Engineer shall determine and certify each addition if the following conditions are satisfied:

(a) the Contractor has:

(i) kept satisfactory records (including the orders, receipts, Costs and use of Plant and Materials) which are available for inspection, and

(ii) submitted a statement of the Cost of acquiring and delivering the Plant and Materials to the Site, supported by satisfactory evidence;

and either:

(b) the relevant Plant and Materials:

(i) are those listed in the Schedules for payment when shipped,

(ii) have been shipped to the Country, en route to the Site, in accordance with the Contract; and

(iii) are described in a clean shipped bill of lading or other evidence of shipment, which has been submitted to the Engineer together with evidence of payment of freight and insurance, any other documents reasonably required, and a bank guarantee in a form and issued by an entity approved by the Employer in amounts and currencies equal to the amount due under this Sub-Clause: this guarantee may be in a similar form to the form referred to in Sub-Clause 14.2 [Advance Payment] and shall be valid until the Plant and Materials are properly stored on Site and protected against loss, damage or deterioration;

or

(c) the relevant Plant and Materials:

(i) are those listed in the Schedules for payment when delivered to the Site, and

(ii) have been delivered to and are properly stored on the Site, are protected against loss, damage or deterioration, and appear to be in accordance with the Contract.

The additional amount to be certified shall be the equivalent of eighty percent (80%) of the Engineer's determination of the cost of the Plant and Materials (including delivery to Site), taking account of the documents mentioned in this Sub-Clause and of the contract value of the Plant and Materials.

The currencies for this additional amount shall be the same as those in which payment will become due when the contract value is included under sub-paragraph (a) of Sub-Clause 14.3 [Application for Interim Payment Certificates]. At that time, the Payment Certificate shall include the applicable reduction which shall be equivalent to, and in the same currencies and proportions as, this additional amount for the relevant Plant and Materials

14.6 Issue of Interim Payment Certificates

No amount will be certified or paid until the Employer has received and approved the Performance Security. Thereafter, the Engineer shall, within 28 days after receiving a Statement and supporting documents, deliver to the Employer and to the Contractor an Interim Payment Certificate which shall state the amount which the Engineer fairly determines to be due, with all supporting particulars for any reduction or withholding made by the Engineer on the Statement if any.

However, prior to issuing the Taking-Over Certificate for the Works, the Engineer shall not be bound to issue an Interim Payment Certificate in an amount which would (after retention and other deductions) be less than the minimum amount of Interim Payment Certificates (if any) stated in the Contract Data. In this event, the Engineer shall give notice to the Contractor accordingly.

An Interim Payment Certificate shall not be withheld for any other reason, although:

(a) if any thing supplied or work done by the Contractor is not in accordance with the Contract, the cost of rectification or replacement may be withheld until rectification or replacement has been completed; and/or

(b) if the Contractor was or is failing to perform any work or obligation in accordance with the Contract, and had been so notified by the Engineer, the value of this work or obligation may be withheld until the work or obligation has been performed.

The Engineer may in any Payment Certificate make any correction or modification that should properly be made to any previous Payment Certificate. A Payment Certificate shall not be deemed to indicate the Engineer's acceptance, approval, consent or satisfaction.

14.7 Payment

The Employer shall pay to the Contractor:

(a) the first instalment of the advance payment within 42 days after issuing the Letter of Acceptance or within 21 days after receiving the documents in accordance with Sub-Clause 4.2 [Performance Security] and Sub-Clause 14.2 [Advance Payment], whichever is later;

(b) the amount certified in each Interim Payment Certificate within 56 days after the Engineer receives the Statement and supporting documents; or, at a time when the Bank's loan or credit (from which part of the payments to the Contractor is being made) is suspended, the amount shown on any statement submitted by the Contractor within 14 days after such statement is submitted, any discrepancy being rectified in the next payment to the Contractor; and

(c) the amount certified in the Final Payment Certificate within 56 days after the Employer receives this Payment Certificate; or, at a time when the Bank's loan or credit (from which part of the payments to the Contractor is being made) is suspended, the undisputed amount shown in the Final Statement within 56 days after the date of notification of the suspension in accordance with Sub-Clause 16.2 [Termination by Contractor].

Payment of the amount due in each currency shall be made into the bank account, nominated by the Contractor, in the payment country (for this currency) specified in the Contract.

14.8 Delayed Payment

If the Contractor does not receive payment in accordance with Sub-Clause 14.7 [Payment], the Contractor shall be entitled to receive financing charges compounded monthly on the amount unpaid during the period of delay. This period shall be deemed to commence on the date for payment specified in Sub-Clause 14.7 [Payment], irrespective (in the case of its sub-paragraph (b)) of the date on which any Interim Payment Certificate is issued.

COPYRIGHT FIDIC JUNE 2010

Unless otherwise stated in the Particular Conditions, these financing charges shall be calculated at the annual rate of three percentage points above the discount rate of the central bank in the country of the currency of payment, or if not available, the interbank offered rate, and shall be paid in such currency.

The Contractor shall be entitled to this payment without formal notice or certification, and without prejudice to any other right or remedy.

14.9 Payment of Retention Money

When the Taking-Over Certificate has been issued for the Works, the first half of the Retention Money shall be certified by the Engineer for payment to the Contractor. If a Taking-Over Certificate is issued for a Section or part of the Works, a proportion of the Retention Money shall be certified and paid. This proportion shall be half (50%) of the proportion calculated by dividing the estimated contract value of the Section or part, by the estimated final Contract Price.

Promptly after the latest of the expiry dates of the Defects Notification Periods, the outstanding balance of the Retention Money shall be certified by the Engineer for payment to the Contractor. If a Taking-Over Certificate was issued for a Section, a proportion of the second half of the Retention Money shall be certified and paid promptly after the expiry date of the Defects Notification Period for the Section. This proportion shall be half (50%) of the proportion calculated by dividing the estimated contract value of the Section by the estimated final Contract Price.

However, if any work remains to be executed under Clause 11 [Defects Liability], the Engineer shall be entitled to withhold certification of the estimated cost of this work until it has been executed.

When calculating these proportions, no account shall be taken of any adjustments under Sub-Clause 13.7 [Adjustments for Changes in Legislation] and Sub-Clause 13.8 [Adjustments for Changes in Cost].

Unless otherwise stated in the Particular Conditions, when the Taking-Over Certificate has been issued for the Works and the first half of the Retention Money has been certified for payment by the Engineer, the Contractor shall be entitled to substitute a guarantee, in the form annexed to the Particular Conditions or in another form approved by the Employer and issued by a reputable bank or financial institution selected by the Contractor, for the second half of the Retention Money. The Contractor shall ensure that the guarantee is in the amounts and currencies of the second half of the Retention Money and is valid and enforceable until the Contractor has executed and completed the Works and remedied any defects, as specified for the Performance Security in Sub-Clause 4.2. On receipt by the Employer of the required guarantee, the Engineer shall certify and the Employer shall pay the second half of the Retention Money. The release of the second half of the Retention Money against a guarantee shall then be in lieu of the release under the second paragraph of this Sub-Clause. The Employer shall return the guarantee to the Contractor within 21 days after receiving a copy of the Performance Certificate.

If the Performance Security required under Sub-Clause 4.2 is in the form of a demand guarantee, and the amount guaranteed under it when the Taking-Over Certificate is issued is more than half of the Retention Money, then the Retention Money guarantee will not be required. If the amount guaranteed under the Performance Security when the Taking-Over Certificate is issued is less than half of the Retention Money, the Retention Money guarantee will only be required for the difference between half of the Retention Money and the amount guaranteed under the Performance Security.

14.10 Statement at Completion

Within 84 days after receiving the Taking-Over Certificate for the Works, the Contractor shall submit to the Engineer six copies of a Statement at completion with supporting documents, in accordance with Sub-Clause 14.3 [Application for Interim Payment Certificates], showing:

(a) the value of all work done in accordance with the Contract up to the date stated in the Taking-Over Certificate for the Works,

(b) any further sums which the Contractor considers to be due, and

(c) an estimate of any other amounts which the Contractor considers will become due to him under the Contract. Estimated amounts shall be shown separately in this Statement at completion.

The Engineer shall then certify in accordance with Sub-Clause 14.6 [Issue of Interim Payment Certificates].

14.11 Application for Final Payment Certificate

Within 56 days after receiving the Performance Certificate, the Contractor shall submit, to the Engineer, six copies of a draft final statement with supporting documents showing in detail in a form approved by the Engineer:

(a) the value of all work done in accordance with the Contract, and

(b) any further sums which the Contractor considers to be due to him under the Contract or otherwise.

If the Engineer disagrees with or cannot verify any part of the draft final statement, the Contractor shall submit such further information as the Engineer may reasonably require within 28 days from receipt of said draft and shall make such changes in the draft as may be agreed between them. The Contractor shall then prepare and submit to the Engineer the final statement as agreed. This agreed statement is referred to in these Conditions as the "Final Statement".

However if, following discussions between the Engineer and the Contractor and any changes to the draft final statement which are agreed, it becomes evident that a dispute exists, the Engineer shall deliver to the Employer (with a copy to the Contractor) an Interim Payment Certificate for the agreed parts of the draft final statement. Thereafter, if the dispute is finally resolved under Sub-Clause 20.4 [Obtaining Dispute Board's Decision] or Sub-Clause 20.5 [Amicable Settlement], the Contractor shall then prepare and submit to the Employer (with a copy to the Engineer) a Final Statement.

14.12 Discharge

When submitting the Final Statement, the Contractor shall submit a discharge which confirms that the total of the Final Statement represents full and final settlement of all moneys due to the Contractor under or in connection with the Contract. This discharge may state that it becomes effective when the Contractor has received the Performance Security and the outstanding balance of this total, in which event the discharge shall be effective on such date.

14.13 Issue of Final Payment Certificate

Within 28 days after receiving the Final Statement and discharge in accordance with Sub-Clause 14.11 [Application for Final Payment Certificate] and Sub-Clause 14.12 [Discharge], the Engineer shall deliver, to the Employer and to the Contractor, the Final Payment Certificate which shall state:

(a) the amount which he fairly determines is finally due, and

(b) after giving credit to the Employer for all amounts previously paid by the Employer and for all sums to which the Employer is entitled, the balance (if any) due from the Employer to the Contractor or from the Contractor to the Employer, as the case may be.

If the Contractor has not applied for a Final Payment Certificate in accordance with Sub-Clause 14.11 [Application for Final Payment Certificate] and Sub-Clause 14.12 [Discharge], the Engineer shall request the Contractor to do so. If the Contractor fails to submit an application within a period of 28 days, the Engineer shall issue the Final Payment Certificate for such amount as he fairly determines to be due.

14.14 Cessation of Employer's Liability

The Employer shall not be liable to the Contractor for any matter or thing under or in connection with the Contract or execution of the Works, except to the extent that the Contractor shall have included an amount expressly for it:

(a) in the Final Statement and also

(b) (except for matters or things arising after the issue of the Taking-Over Certificate for the Works) in the Statement at completion described in Sub-Clause 14.10 [Statement at Completion].

However, this Sub-Clause shall not limit the Employer's liability under his indemnification obligations, or the Employer's liability in any case of fraud, deliberate default or reckless misconduct by the Employer.

14.15 Currencies of Payment

The Contract Price shall be paid in the currency or currencies named in the Schedule of Payment Currencies. If more than one currency is so named, payments shall be made as follows:

(a) if the Accepted Contract Amount was expressed in Local Currency only:

  (i) the proportions or amounts of the Local and Foreign Currencies, and the fixed rates of exchange to be used for calculating the payments, shall be as stated in the Schedule of Payment Currencies, except as otherwise agreed by both Parties;

  (ii) payments and deductions under Sub-Clause 13.5 [Provisional Sums] and Sub-Clause 13.7 [Adjustments for Changes in Legislation] shall be made in the applicable currencies and proportions; and

  (iii) other payments and deductions under sub-paragraphs (a) to (d) of Sub-Clause 14.3 [Application for Interim Payment Certificates] shall be made in the currencies and proportions specified in sub-paragraph (a)(i) above;

(b) payment of the damages specified in the Contract Data shall be made in the currencies and proportions specified in the Schedule of Payment Currencies;

(c) other payments to the Employer by the Contractor shall be made in the currency in which the sum was expended by the Employer, or in such currency as may be agreed by both Parties;

(d) if any amount payable by the Contractor to the Employer in a particular currency exceeds the sum payable by the Employer to the Contractor in that currency, the Employer may recover the balance of this amount from the sums otherwise payable to the Contractor in other currencies; and

(e) if no rates of exchange are stated in the Schedule of Payment Currencies, they shall be those prevailing on the Base Date and determined by the central bank of the Country.

15 Termination by Employer

15.1 Notice to Correct

If the Contractor fails to carry out any obligation under the Contract, the Engineer may by notice require the Contractor to make good the failure and to remedy it within a specified reasonable time.

15.2 Termination by Employer

The Employer shall be entitled to terminate the Contract if the Contractor:

(a) fails to comply with Sub-Clause 4.2 [Performance Security] or with a notice under Sub-Clause 15.1 [Notice to Correct],

(b) abandons the Works or otherwise plainly demonstrates the intention not to continue performance of his obligations under the Contract,

(c) without reasonable excuse fails:

(i) to proceed with the Works in accordance with Clause 8 [Commencement, Delays and Suspension], or

(ii) to comply with a notice issued under Sub-Clause 7.5 [Rejection] or Sub-Clause 7.6 [Remedial Work], within 28 days after receiving it,

(d) subcontracts the whole of the Works or assigns the Contract without the required agreement,

(e) becomes bankrupt or insolvent, goes into liquidation, has a receiving or administration order made against him, compounds with his creditors, or carries on business under a receiver, trustee or manager for the benefit of his creditors, or if any act is done or event occurs which (under applicable Laws) has a similar effect to any of these acts or events, or

(f) gives or offers to give (directly or indirectly) to any person any bribe, gift, gratuity, commission or other thing of value, as an inducement or reward:

(i) for doing or forbearing to do any action in relation to the Contract, or

(ii) for showing or forbearing to show favour or disfavour to any person in relation to the Contract,

or if any of the Contractor's Personnel, agents or Subcontractors gives or offers to give (directly or indirectly) to any person any such inducement or reward as is described in this sub-paragraph (f). However, lawful inducements and rewards to Contractor's Personnel shall not entitle termination.

In any of these events or circumstances, the Employer may, upon giving 14 days' notice to the Contractor, terminate the Contract and expel the Contractor from the Site. However, in the case of sub-paragraph (e) or (f), the Employer may by notice terminate the Contract immediately.

The Employer's election to terminate the Contract shall not prejudice any other rights of the Employer, under the Contract or otherwise.

The Contractor shall then leave the Site and deliver any required Goods, all Contractor's Documents, and other design documents made by or for him, to the Engineer. However, the Contractor shall use his best efforts to comply immediately with any reasonable instructions included in the notice (i) for the assignment of any subcontract, and (ii) for the protection of life or property or for the safety of the Works.

After termination, the Employer may complete the Works and/or arrange for any other entities to do so. The Employer and these entities may then use any Goods, Contractor's Documents and other design documents made by or on behalf of the Contractor.

The Employer shall then give notice that the Contractor's Equipment and Temporary Works will be released to the Contractor at or near the Site. The Contractor shall promptly arrange their removal, at the risk and cost of the Contractor. However, if by this time the Contractor has failed to make a payment due to the Employer, these items may be sold by the Employer in order to recover this payment. Any balance of the proceeds shall then be paid to the Contractor.

15.3 Valuation at Date of Termination

As soon as practicable after a notice of termination under Sub-Clause 15.2 [Termination by Employer] has taken effect, the Engineer shall proceed in accordance with Sub-Clause 3.5 [Determinations] to agree or determine the value of the Works, Goods and Contractor's Documents, and any other sums due to the Contractor for work executed in accordance with the Contract.

15.4 Payment after Termination

After a notice of termination under Sub-Clause 15.2 [Termination by Employer] has taken effect, the Employer may:

(a) proceed in accordance with Sub-Clause 2.5 [Employer's Claims],

(b) withhold further payments to the Contractor until the costs of execution, completion and remedying of any defects, damages for delay in completion (if any), and all other costs incurred by the Employer, have been established, and/or

(c) recover from the Contractor any losses and damages incurred by the Employer and any extra costs of completing the Works, after allowing for any sum due to the Contractor under Sub-Clause 15.3 [Valuation at Date of Termination]. After recovering any such losses, damages and extra costs, the Employer shall pay any balance to the Contractor.

15.5 Employer's Entitlement to Termination for Convenience

The Employer shall be entitled to terminate the Contract, at any time for the Employer's convenience, by giving notice of such termination to the Contractor. The termination shall take effect 28 days after the later of the dates on which the Contractor receives this notice or the Employer returns the Performance Security. The Employer shall not terminate the Contract under this Sub-Clause in order to execute the Works himself or to arrange for the Works to be executed by another contractor or to avoid a termination of the Contract by the Contractor under Clause 16.2 [Termination by Contractor].

After this termination, the Contractor shall proceed in accordance with Sub-Clause 16.3 [Cessation of Work and Removal of Contractor's Equipment] and shall be paid in accordance with Sub-Clause 16.4 [Payment on Termination].

15.6 Corrupt or Fraudulent Practices

If the Employer determines, based on reasonable evidence, that the Contractor has engaged in corrupt, fraudulent, collusive or coercive practices, in competing for or in executing the Contract, then the Employer may, after giving 14 days notice to the Contractor, terminate the Contract and expel him from the Site, and the provisions of Clause 15 shall apply as if such termination had been made under Sub-Clause 15.2 [Termination by Employer].

Should any employee of the Contractor be determined, based on reasonable evidence, to have engaged in corrupt, fraudulent or coercive practice during the execution of the work then that employee shall be removed in accordance with Sub-Clause 6.9 [Contractor's Personnel].

[For contracts financed by the African Development Bank]

For the purposes of this Sub-Clause:

(a) "corrupt practice" means the offering, giving, receiving or soliciting of any thing of value to influence the action of a public official in the procurement process or in the Contract execution; and

(b) "fraudulent practice" means a misrepresentation of facts in order to influence a procurement process or the execution of the Contract to the detriment of the Borrower, and includes collusive practice among Bidders (prior to or after bid submission) designed to establish bid prices at artificial non-competitive levels and to deprive the Borrower of the benefits of free and open competition.

[For contracts financed by the Asian Development Bank]

For the purposes of this Sub-Clause:

(a) "corrupt practice" means the offering, giving, receiving, or soliciting, directly or indirectly, anything of value to influence improperly the actions of another party;

(b) "fraudulent practice" means any act or omission, including a misrepresentation, that knowingly or recklessly misleads, or attempts to mislead, a party to obtain a financial or other benefit or to avoid an obligation;

(c) “coercive practice" means impairing or harming, or threatening to impair or harm, directly or indirectly, any party or the property of the party to influence improperly the actions of a party;

(d) “collusive practice" means an arrangement between two or more parties designed to achieve an improper purpose, including influencing improperly the actions of another party.

[For contracts financed by the Black Sea Trade and Development Bank and by the European Bank for Reconstruction and Development]

For the purposes of this Sub-Clause, the Bank defines, for the purposes of this provision, the terms set forth below as follows:

(a) “corrupt practice” means the offering, giving, receiving, or soliciting of any thing of value to influence a person, or the threatening of injury to person, property or reputation, in connection with the procurement process or in contract execution in order to obtain or retain business or other improper advantage in the conduct of international business;

(b) “fraudulent practice” means a misrepresentation of facts in order to influence a procurement process or the execution of a contract to the detriment of the client, and includes collusive practices among tenderers (prior to or after tender submission) designed to establish tender prices at artificial, non-competitive levels and to deprive the client of the benefits of free and open competition.

[For contracts financed by the Caribbean Development Bank:]

For the purposes of this Sub-Clause:

(a) “corrupt practice” means the offering, giving, receiving or soliciting, directly or indirectly, of any thing of value to influence the action of a public official in the procurement process or in the Contract execution;

(b) “fraudulent practice” means a misrepresentation or omission of facts in order to influence a procurement process or the execution of the Contract;

(c) “collusive practice” means a scheme or arrangement between two or more bidders, with or without the knowledge of the Borrower, designed to establish bid prices at artificial, non-competitive levels;

(d) “coercive practice” means harming or threatening to harm, directly or indirectly, persons or their property to influence their participation in the procurement process or affect the execution of a contract.

[For contracts financed by the Inter-American Development Bank]

For the purposes of this Sub-Clause:

The Bank requires that all Contractors adhere to the Bank’s Policies for the Procurement of Works and Goods financed by the Bank. In particular, the Bank requires that all Borrowers (including grant beneficiaries), the executing agencies and contracting agencies, as well as all firms, entities and individuals bidding for or participating in a Bank-financed project, including, inter alia, applicants, bidders, contractors, consulting firms and individual consultants (including their respective officers, employees and agents) adhere to the highest ethical standards, and report to the Bank all suspected acts of fraud or corruption of which it has knowledge or becomes aware, during the Bidding Process and throughout the negotiation or execution of a Contract. Fraud and corruption are prohibited.

Fraud and corruption include acts of:

(a) bribery,

(b) extortion or coercion,

(c) fraud, and

(d) collusion.

The definitions of actions set forth below cover the most common types of corrupt practices, but are not exhaustive. For this reason, the Bank shall also take action in the event of any similar deed or complaint involving alleged acts of corruption, even when these are not specified in the following list. The Bank shall in all cases proceed in accordance with Sub-Clause 15.6.

In pursuance of this policy:

(a) the Bank defines the terms set forth below as follows:

(i) "bribery" meaning the offering or giving of anything of value to influence the actions or decisions of third parties or the receiving or soliciting of any benefit in exchange for actions or omissions related to the performance of duties;

(ii) "extortion" or "coercion" meaning the act of obtaining something, compelling an action or influencing a decision through intimidation, threat or the use of force, where potential or actual injury may befall upon a person, his/her reputation or property;

(ii) "fraud" meaning any action or omission intended to misrepresent the truth so as to induce others to act in reliance thereof, with the purpose of obtaining some unjust advantage or causing damage to others; and

(iv) "collusion" meaning a secret agreement between two or more parties to defraud or cause damage to a person or entity or to obtain an unlawful purpose;

(b) if the Bank, in accordance with its administrative procedures, demonstrates that any firm, entity or individual bidding for or participating in a Bank-financed project including, inter alia, applicants, bidders, contractors, consulting firms, individual consultants, borrowers (including grant beneficiaries), purchasers, executing agencies and contracting agency (including their respective officers, employees and agents) engaged in an act of fraud or corruption in connection with Bank-financed projects, the Bank may:

(i) decide not to finance any proposal to award a contract or a contract awarded financed by the Bank;

(ii) suspend disbursement of the operation if it is determined at any stage that evidence is sufficient to support a finding that an employee, agent or representative of the Borrower, Executing Agency or Contracting Agency has engaged in an act of fraud or corruption;

(iii) cancel and/or accelerate the payment of, the portion of a loan or grant earmarked for a contract, when there is evidence that the representative of the Borrower, or Beneficiary of a grant, has not taken the adequate remedial measures within a time period which the Bank considers reasonable, and in accordance with the due process guarantees of the Borrowing country's legislation;

(iv) issue a reprimand in the form of a formal letter of censure of the firm, entity or individual's behaviour;

(v) issue a declaration that an individual, entity or firm is ineligible, either permanently or for a stated period of time, to be awarded contracts under Bank-financed projects except under such conditions as the Bank deems to be appropriate;

(v) refer the matter to appropriate law enforcement authorities; and/or;

(vii) may impose other sanctions that it deems to be appropriate under the circumstances, including the imposition of fines representing reimbursement of the Bank for costs associated with investigations and proceedings. Such other sanctions may be imposed in addition to or in lieu of other sanctions;

(c) the Bank has established administrative procedures for cases of allegations of fraud and corruption within the procurement process or the execution of a contract financed by the Bank which are available at the Bank's website (www.iadb.org), as updated from time to time. To that effect any complaint shall be submitted to the Bank's Office of Institutional Integrity (OII) for the appropriate investigation. Allegations may be presented confidentially or anonymously;

(d) payments are expressly conditional upon the claimant's participation in the procurement process conformed with all applicable Bank policies on Fraud and Corruption described in this Sub-Clause 15.5; and

(e) the imposition of any sanction referred to paragraph (b) of this Sub-Clause will be public;

The Bank will have the right to require that a Contractor permit the Bank to inspect their accounts and records and other documents relating to the submission of bids and contract performance and to have them audited by auditors appointed by the Bank. The Bank will have the right to require that Contractors to:

(a) maintain all documents and records related to the Bank-financed project for five (5) years after completion of the work; and

(b) require the delivery of any document necessary for the investigation of allegations of fraud or corruption and the availability of employees or agents of the contractor with knowledge of the Bank-financed project to respond to questions from the Bank.

If the Contractor refuses to comply with the Bank's request, the Bank, in its sole discretion, may take appropriate action against the Contractor.

The Contractor represents and warrants:

(a) that they have read and understood the Bank's prohibition against fraud and corruption and agrees to abide by the applicable rules;

(b) that they have not engaged in any violation of policies on fraud and corruption described herein;

(c) that they have not misrepresented or concealed any material facts during the procurement or contract negotiation processes or performance of the contract;

(d) that neither they nor any of their directors, officers or principal shareholders have been declared ineligible to be awarded Bank-financed contracts or have been convicted of a crime involving fraud or corruption;

(e) that none of their directors, officers or principal shareholders has been a director, officer or principal shareholder of any other company or entity that has been declared ineligible to be awarded a Bank-financed contract or has been convicted of a crime involving fraud or corruption;

(f) that all commissions, agents' fees, facilitating payments or revenue-sharing agreements related to the Bank-financed contract or consulting agreement have been disclosed;

(g) that they acknowledge that the breach of any of these warranties constitute a basis for the imposition of any or a combination of the measures described in this Sub-Clause.

[For contracts financed by the World Bank]

In pursuance of this policy, the Bank:

(a) defines, for the purposes of this provision, the terms set forth below as follows:

(i) "corrupt practice" is the offering, giving, receiving or soliciting, directly or indirectly, of anything of value to influence improperly the actions of another party;

In this context, "another party" refers to a public official acting in relation to the procurement process or contract execution]. In this context, "public official" includes World Bank staff and employees of other organisations taking or reviewing procurement decisions.

(ii) *"fraudulent practice" is any act or omission, including a misrepresentation, that knowingly or recklessly misleads, or attempts to mislead, a party to obtain a financial or other benefit or to avoid an obligation;*

In this context, "party" refers to a public official; the terms "benefit" and "obligation" relate to the procurement process or contract execution; and the "act or omission" is intended to influence the procurement process or contract execution.

(iii) *"collusive practice" is an arrangement between two or more parties designed to achieve an improper purpose, including to influence improperly the actions of another party;*

In this context, "parties" refers to participants in the procurement process (including public officials) attempting to establish bid prices at artificial, non competitive levels.

(iv) *"coercive practice" is impairing or harming, or threatening to impair or harm, directly or indirectly, any party or the property of the party to influence improperly the actions of a party;*

In this context, "parties" refers to participants in the procurement process (including public officials) attempting to establish bid prices at artificial, non competitive levels.

(v) "obstructive practice" is

(A) deliberately destroying, falsifying, altering or concealing of evidence material to the investigation or making false statements to investigators in order to materially impede a Bank investigation into allegations of a corrupt, fraudulent, coercive or collusive practice; and/or threatening, harassing or intimidating any party to prevent it from disclosing its knowledge of matters relevant to the investigation or from pursuing the investigation, or

(B) acts intended to materially impede the exercise of the Bank's inspection and audit rights.

In this context, "party" refers to a participant in the procurement process or contract execution.

16 Suspension and Termination by Contractor

16.1 Contractor's Entitlement to Suspend Work

If the Engineer fails to certify in accordance with Sub-Clause 14.6 [Issue of Interim Payment Certificates] or the Employer fails to comply with Sub-Clause 2.4 [Employer's Financial Arrangements] or Sub-Clause 14.7 [Payment], the Contractor may, after giving not less than 21 days' notice to the Employer, suspend work (or reduce the rate of work) unless and until the Contractor has received the Payment Certificate, reasonable evidence or payment, as the case may be and as described in the notice.

Notwithstanding the above, if the Bank has suspended disbursements under the loan or credit from which payments to the Contractor are being made, in whole or in part, for the execution of the Works, and no alternative funds are available as provided for in Sub-Clause 2.4 [Employer's Financial Arrangements], the Contractor may by notice suspend work or reduce the rate of work at any time, but not less than 7 days after the Borrower having received the suspension notification from the Bank.

The Contractor's action shall not prejudice his entitlements to financing charges under Sub-Clause 14.8 [Delayed Payment] and to termination under Sub-Clause 16.2 [Termination by Contractor].

If the Contractor subsequently receives such Payment Certificate, evidence or payment (as described in the relevant Sub-Clause and in the above notice) before giving a notice of termination, the Contractor shall resume normal working as soon as is reasonably practicable.

If the Contractor suffers delay and/or incurs Cost as a result of suspending work (or reducing the rate of work) in accordance with this Sub-Clause, the Contractor shall give notice to the Engineer and shall be entitled subject to Sub-Clause 20.1 [Contractor's Claims] to:

(a) an extension of time for any such delay, if completion is or will be delayed, under Sub-Clause 8.4 [Extension of Time for Completion], and

(b) payment of any such Cost plus profit, which shall be included in the Contract Price.

After receiving this notice, the Engineer shall proceed in accordance with Sub-Clause 3.5 [Determinations] to agree or determine these matters.

16.2 Termination by Contractor

The Contractor shall be entitled to terminate the Contract if:

(a) the Contractor does not receive the reasonable evidence within 42 days after giving notice under Sub-Clause 16.1 [Contractor's Entitlement to Suspend Work] in respect of a failure to comply with Sub-Clause 2.4 [Employer's Financial Arrangements],

(b) the Engineer fails, within 56 days after receiving a Statement and supporting documents, to issue the relevant Payment Certificate,

(c) the Contractor does not receive the amount due under an Interim Payment Certificate within 42 days after the expiry of the time stated in Sub-Clause 14.7 [Payment] within which payment is to be made (except for deductions in accordance with Sub-Clause 2.5 [Employer's Claims]),

(d) the Employer substantially fails to perform his obligations under the Contract in such manner as to materially and adversely affect the economic balance of the Contract and/or the ability of the Contractor to perform the Contract,

(e) the Employer fails to comply with Sub-Clause 1.6 [Contract Agreement] or Sub-Clause 1.7 [Assignment],

(f) a prolonged suspension affects the whole of the Works as described in Sub-Clause 8.11 [Prolonged Suspension],

(g) the Employer becomes bankrupt or insolvent, goes into liquidation, has a receiving or administration order made against him, compounds with his creditors, or carries on business under a receiver, trustee or manager for the benefit of his creditors, or if any act is done or event occurs which (under applicable Laws) has a similar effect to any of these acts or events,

(h) the Contractor does not receive the Engineer's instruction recording the agreement of both Parties on the fulfilment of the conditions for the Commencement of Works under Sub-Clause 8.1 [Commencement of Works].

In any of these events or circumstances, the Contractor may, upon giving 14 days' notice to the Employer, terminate the Contract. However, in the case of sub-paragraph (f) or (g), the Contractor may by notice terminate the Contract immediately.

In the event the Bank suspends the loan or credit from which part or whole of the payments to the Contractor are being made, if the Contractor has not received the sums due to him upon expiration of the 14 days referred to in Sub-Clause 14.7 [Payment] for payments under Interim Payment Certificates, the Contractor may, without prejudice to the Contractor's entitlement to financing charges under Sub-Clause 14.8 [Delayed Payment], take one of the following actions, namely (i) suspend work or reduce the rate of work under Sub-Clause 16.1 above, or (ii) terminate the Contract by giving notice to the Employer, with a copy to the Engineer, such termination to take effect 14 days after the giving of the notice.

The Contractor's election to terminate the Contract shall not prejudice any other rights of the Contractor, under the Contract or otherwise.

16.3 Cessation of Work and Removal of Contractor's Equipment

After a notice of termination under Sub-Clause 15.5 [Employer's Entitlement to Termination for Convenience], Sub-Clause 16.2 [Termination by Contractor] or Sub-Clause 19.6 [Optional Termination, Payment and Release] has taken effect, the Contractor shall promptly:

(a) cease all further work, except for such work as may have been instructed by the Engineer for the protection of life or property or for the safety of the Works,

(b) hand over Contractor's Documents, Plant, Materials and other work, for which the Contractor has received payment, and

(c) remove all other Goods from the Site, except as necessary for safety, and leave the Site.

16.4 Payment on Termination

After a notice of termination under Sub-Clause 16.2 [Termination by Contractor] has taken effect, the Employer shall promptly:

(a) return the Performance Security to the Contractor,

(b) pay the Contractor in accordance with Sub-Clause 19.6 [Optional Termination, Payment and Release], and

(c) pay to the Contractor the amount of any loss or damage sustained by the Contractor as a result of this termination.

17 Risk and Responsibility

17.1 Indemnities

The Contractor shall indemnify and hold harmless the Employer, the Employer's Personnel, and their respective agents, against and from all claims, damages, losses and expenses (including legal fees and expenses) in respect of:

(a) bodily injury, sickness, disease or death, of any person whatsoever arising out of or in the course of or by reason of the Contractor's design (if any), the execution and completion of the Works and the remedying of any defects, unless attributable to any negligence, wilful act or breach of the Contract by the Employer, the Employer's Personnel, or any of their respective agents, and

(b) damage to or loss of any property, real or personal (other than the Works), to the extent that such damage or loss arises out of or in the course of or by reason of the Contractor's design (if any), the execution and completion of the Works and the remedying of any defects, unless and to the extent that any such damage or loss is attributable to any negligence, wilful act or breach of the Contract by the Employer, the Employer's Personnel, their respective agents, or anyone directly or indirectly employed by any of them.

The Employer shall indemnify and hold harmless the Contractor, the Contractor's Personnel, and their respective agents, against and from all claims, damages, losses and expenses (including legal fees and expenses) in respect of (1) bodily injury, sickness, disease or death, which is attributable to any negligence, wilful act or breach of the Contract by the Employer, the Employer's Personnel, or any of their respective agents, and (2) the matters for which liability may be excluded from insurance cover, as described in sub-paragraphs (d)(i), (ii) and (iii) of Sub-Clause 18.3 [Insurance Against Injury to Persons and Damage to Property].

17.2 Contractor's Care of the Works

The Contractor shall take full responsibility for the care of the Works and Goods from the Commencement Date until the Taking-Over Certificate is issued (or is deemed to be issued under Sub-Clause 10.1 [Taking Over of the Works and Sections]) for the Works, when responsibility for the care of the Works shall pass to the Employer. If a Taking-Over Certificate is issued (or is so deemed to be issued) for any Section or part of the Works, responsibility for the care of the Section or part shall then pass to the Employer.

After responsibility has accordingly passed to the Employer, the Contractor shall take responsibility for the care of any work which is outstanding on the date stated in a Taking-Over Certificate, until this outstanding work has been completed.

If any loss or damage happens to the Works, Goods or Contractor's Documents during the period when the Contractor is responsible for their care, from any cause not listed in Sub-Clause 17.3 [Employer's Risks], the Contractor shall rectify the loss or damage at the Contractor's risk and cost, so that the Works, Goods and Contractor's Documents conform with the Contract.

The Contractor shall be liable for any loss or damage caused by any actions performed by the Contractor after a Taking-Over Certificate has been issued. The Contractor shall also be liable for any loss or damage which occurs after a Taking-Over Certificate has been issued and which arose from a previous event for which the Contractor was liable.

17.3 Employer's Risks

The risks referred to in Sub-Clause 17.4 [Consequences of Employer's Risks] below, insofar as they directly affect the execution of the Works in the Country, are:

(a) war, hostilities (whether war be declared or not), invasion, act of foreign enemies,

(b) rebellion, terrorism, sabotage by persons other than the Contractor's Personnel, revolution, insurrection, military or usurped power, or civil war, within the Country,

(c) riot, commotion or disorder within the Country by persons other than the Contractor's Personnel,

(d) munitions of war, explosive materials, ionising radiation or contamination by radio-activity, within the Country, except as may be attributable to the Contractor's use of such munitions, explosives, radiation or radio-activity,

(e) pressure waves caused by aircraft or other aerial devices travelling at sonic or supersonic speeds,

(f) use or occupation by the Employer of any part of the Permanent Works, except as may be specified in the Contract,

(g) design of any part of the Works by the Employer's Personnel or by others for whom the Employer is responsible, and

(h) any operation of the forces of nature which is Unforeseeable or against which an experienced contractor could not reasonably have been expected to have taken adequate preventive precautions.

17.4 Consequences of Employer's Risks

If and to the extent that any of the risks listed in Sub-Clause 17.3 above results in loss or damage to the Works, Goods or Contractor's Documents, the Contractor shall promptly give notice to the Engineer and shall rectify this loss or damage to the extent required by the Engineer.

If the Contractor suffers delay and/or incurs Cost from rectifying this loss or damage, the Contractor shall give a further notice to the Engineer and shall be entitled subject to Sub-Clause 20.1 [Contractor's Claims] to:

(a) an extension of time for any such delay, if completion is or will be delayed, under Sub-Clause 8.4 [Extension of Time for Completion], and

(b) payment of any such Cost, which shall be included in the Contract Price. In the case of sub-paragraphs (f) and (g) of Sub-Clause 17.3 [Employer's Risks], Cost plus profit shall be payable.

After receiving this further notice, the Engineer shall proceed in accordance with Sub-Clause 3.5 [Determinations] to agree or determine these matters.

17.5 Intellectual and Industrial Property Rights

In this Sub-Clause, "infringement" means an infringement (or alleged infringement) of any patent, registered design, copyright, trade mark, trade name, trade secret or other intellectual or industrial property right relating to the Works; and "claim" means a claim (or proceedings pursuing a claim) alleging an infringement.

Whenever a Party does not give notice to the other Party of any claim within 28 days of receiving the claim, the first Party shall be deemed to have waived any right to indemnity under this Sub-Clause.

The Employer shall indemnify and hold the Contractor harmless against and from any claim alleging an infringement which is or was:

(a) an unavoidable result of the Contractor's compliance with the Contract, or

(b) a result of any Works being used by the Employer:

(i) for a purpose other than that indicated by, or reasonably to be inferred from, the Contract, or

(ii) in conjunction with any thing not supplied by the Contractor, unless such use was disclosed to the Contractor prior to the Base Date or is stated in the Contract.

The Contractor shall indemnify and hold the Employer harmless against and from any other claim which arises out of or in relation to (i) the manufacture, use, sale or import of any Goods, or (ii) any design for which the Contractor is responsible.

If a Party is entitled to be indemnified under this Sub-Clause, the indemnifying Party may (at its cost) conduct negotiations for the settlement of the claim, and any litigation or arbitration which may arise from it. The other Party shall, at the request and cost of the indemnifying Party, assist in contesting the claim. This other Party (and its Personnel) shall not make any admission which might be prejudicial to the indemnifying Party, unless the indemnifying Party failed to take over the conduct of any negotiations, litigation or arbitration upon being requested to do so by such other Party.

17.6 Limitation of Liability

Neither Party shall be liable to the other Party for loss of use of any Works, loss of profit, loss of any contract or for any indirect or consequential loss or damage which may be suffered by the other Party in connection with the Contract, other than as specifically provided in Sub-Clause 8.7 [Delay Damages]; Sub-Clause 11.2 [Cost of Remedying Defects]; Sub-Clause 15.4 [Payment after Termination]; Sub-Clause 16.4 [Payment on Termination]; Sub-Clause 17.1 [Indemnities]; Sub-Clause 17.4(b) [Consequences of Employer's Risks] and Sub-Clause 17.5 [Intellectual and Industrial Property Rights].

The total liability of the Contractor to the Employer, under or in connection with the Contract other than under Sub-Clause 4.19 [Electricity, Water and Gas], Sub-Clause 4.20 [Employer's Equipment and Free-Issue Materials], Sub-Clause 17.1 [Indemnities] and Sub-Clause 17.5 [Intellectual and Industrial Property Rights], shall not exceed the sum resulting from the application of a multiplier (less or greater than one) to the Accepted Contract Amount, as stated in the Contract Data, or (if such multiplier or other sum is not so stated) the Accepted Contract Amount.

This Sub-Clause shall not limit liability in any case of fraud, deliberate default or reckless misconduct by the defaulting Party.

17.7 Use of Employer's Accommodation/Facilities

The Contractor shall take full responsibility for the care of the Employer provided accommodation and facilities, if any, as detailed in the Specification, from the respective dates of hand-over to the Contractor until cessation of occupation (where hand-over or cessation of occupation may take place after the date stated in the Taking-Over Certificate for the Works).

If any loss or damage happens to any of the above items while the Contractor is responsible for their care arising from any cause whatsoever other than those for which the Employer is liable, the Contractor shall, at his own cost, rectify the loss or damage to the satisfaction of the Engineer.

18 Insurance

18.1 General Requirements for Insurances

In this Clause, "insuring Party" means, for each type of insurance, the Party responsible for effecting and maintaining the insurance specified in the relevant Sub-Clause.

Wherever the Contractor is the insuring Party, each insurance shall be effected with insurers and in terms approved by the Employer. These terms shall be consistent with any terms agreed by both Parties before the date of the Letter of Acceptance. This agreement of terms shall take precedence over the provisions of this Clause

Wherever the Employer is the insuring Party, each insurance shall be effected with insurers and in terms acceptable to the Contractor. These terms shall be consistent with any terms agreed by both Parties before the date of the Letter of Acceptance. This agreement of terms shall take precedence over the provisions of this Clause.

If a policy is required to indemnify joint insured, the cover shall apply separately to each insured as though a separate policy had been issued for each of the joint insured. If a policy indemnifies additional joint insured, namely in addition to the insured specified in this Clause, (i) the Contractor shall act under the policy on behalf of these additional joint insured except that the Employer shall act for Employer's Personnel, (ii) additional joint insured shall not be entitled to receive payments directly from the insurer or to have any other direct dealings with the insurer, and (iii) the insuring Party shall require all additional joint insured to comply with the conditions stipulated in the policy.

Each policy insuring against loss or damage shall provide for payments to be made in the currencies required to rectify the loss or damage. Payments received from insurers shall be used for the rectification of the loss or damage.

The relevant insuring Party shall, within the respective periods stated in the Contract Data (calculated from the Commencement Date), submit to the other Party:

(a) evidence that the insurances described in this Clause have been effected, and

(b) copies of the policies for the insurances described in Sub-Clause 18.2 [Insurance for Works and Contractor's Equipment] and Sub-Clause 18.3 [Insurance against Injury to Persons and Damage to Property].

When each premium is paid, the insuring Party shall submit evidence of payment to the other Party. Whenever evidence or policies are submitted, the insuring Party shall also give notice to the Engineer.

Each Party shall comply with the conditions stipulated in each of the insurance policies. The insuring Party shall keep the insurers informed of any relevant changes to the execution of the Works and ensure that insurance is maintained in accordance with this Clause.

Neither Party shall make any material alteration to the terms of any insurance without the prior approval of the other Party. If an insurer makes (or attempts to make) any alteration, the Party first notified by the insurer shall promptly give notice to the other Party.

If the insuring Party fails to effect and keep in force any of the insurances it is required to effect and maintain under the Contract, or fails to provide satisfactory evidence and copies of policies in accordance with this Sub-Clause, the other Party may (at its option and without prejudice to any other right or remedy) effect insurance for the relevant coverage and pay the premiums due. The insuring Party shall pay the amount of these premiums to the other Party, and the Contract Price shall be adjusted accordingly.

Nothing in this Clause limits the obligations, liabilities or responsibilities of the Contractor or the Employer, under the other terms of the Contract or otherwise. Any amounts not insured or not recovered from the insurers shall be borne by the Contractor and/or the Employer in accordance with these obligations, liabilities or responsibilities. However, if the insuring Party fails to effect and keep in force an insurance which is available and which it is required to effect and maintain under the Contract, and the other Party neither approves the omission nor effects insurance for the coverage relevant to this default, any moneys which should have been recoverable under this insurance shall be paid by the insuring Party.

Payments by one Party to the other Party shall be subject to Sub-Clause 2.5 [Employer's Claims] or Sub-Clause 20.1 [Contractor's Claims], as applicable.

The Contractor shall be entitled to place all insurance relating to the Contract (including, but not limited to the insurance referred to Clause 18) with insurers from any eligible source country.

18.2 Insurance for Works and Contractor's Equipment

The insuring Party shall insure the Works, Plant, Materials and Contractor's Documents for not less than the full reinstatement cost including the costs of demolition, removal of debris and professional fees and profit. This insurance shall be effective from the date by which the evidence is to be submitted under sub-paragraph (a) of Sub-Clause 18.1 [General Requirements for Insurances], until the date of issue of the Taking-Over Certificate for the Works.

The insuring Party shall maintain this insurance to provide cover until the date of issue of the Performance Certificate, for loss or damage for which the Contractor is liable arising from a cause occurring prior to the issue of the Taking-Over Certificate, and for loss or damage caused by the Contractor in the course of any other operations (including those under Clause 11 [Defects Liability]).

The insuring Party shall insure the Contractor's Equipment for not less than the full replacement value, including delivery to Site. For each item of Contractor's Equipment, the insurance shall be effective while it is being transported to the Site and until it is no longer required as Contractor's Equipment.

Unless otherwise stated in the Particular Conditions, insurances under this Sub-Clause:

(a) shall be effected and maintained by the Contractor as insuring Party,

(b) shall be in the joint names of the Parties, who shall be jointly entitled to receive payments from the insurers, payments being held or allocated to the Party actually bearing the costs of rectifying the loss or damage,

(c) shall cover all loss and damage from any cause not listed in Sub-Clause 17.3 [Employer's Risks],

(d) shall also cover, to the extent specifically required in the bidding documents of the Contract, loss or damage to a part of the Works which is attributable to the use or occupation by the Employer of another part of the Works, and loss or damage from the risks listed in sub-paragraphs (c), (g) and (h) of Sub-Clause 17.3 [Employer's Risks], excluding (in each case) risks which are not insurable at commercially reasonable terms, with deductibles per occurrence of not more than the amount stated in the Contract Data (if an amount is not so stated, this sub-paragraph (d) shall not apply), and

(e) may however exclude loss of, damage to, and reinstatement of:

(i) a part of the Works which is in a defective condition due to a defect in its design, materials or workmanship (but cover shall include any other parts which are lost or damaged as a direct result of this defective condition and not as described in sub-paragraph (ii) below),

(ii) a part of the Works which is lost or damaged in order to reinstate any other part of the Works if this other part is in a defective condition due to a defect in its design, materials or workmanship,

(iii) a part of the Works which has been taken over by the Employer, except to the extent that the Contractor is liable for the loss or damage, and

(iv) Goods while they are not in the Country, subject to Sub-Clause 14.5 [Plant and Materials intended for the Works].

If, more than one year after the Base Date, the cover described in sub-paragraph (d) above ceases to be available at commercially reasonable terms, the Contractor shall (as insuring Party) give notice to the Employer, with supporting particulars. The Employer shall then (i) be entitled subject to Sub-Clause 2.5 [Employer's Claims] to payment of an amount equivalent to such commercially reasonable terms as the Contractor should have expected to have paid for such cover, and (ii) be deemed, unless he obtains the cover at commercially reasonable terms, to have approved the omission under Sub-Clause 18.1 [General Requirements for Insurances].

18.3 Insurance against Injury to Persons and Damage to Property

The insuring Party shall insure against each Party's liability for any loss, damage, death or bodily injury which may occur to any physical property (except things insured under Sub-Clause 18.2 [Insurance for Works and Contractor's Equipment]) or to any person (except persons insured under Sub-Clause 18.4 [Insurance for Contractor's Personnel]), which may arise out of the Contractor's performance of the Contract and occurring before the issue of the Performance Certificate.

This insurance shall be for a limit per occurrence of not less than the amount stated in the Contract Data, with no limit on the number of occurrences. If an amount is not stated in the Contract Data, this Sub-Clause shall not apply.

Unless otherwise stated in the Particular Conditions, the insurances specified in this Sub-Clause:

(a) shall be effected and maintained by the Contractor as insuring Party,

(b) shall be in the joint names of the Parties,

(c) shall be extended to cover liability for all loss and damage to the Employer's property (except things insured under Sub-Clause 18.2) arising out of the Contractor's performance of the Contract, and

(d) may however exclude liability to the extent that it arises from:

(i) the Employer's right to have the Permanent Works executed on, over, under, in or through any land, and to occupy this land for the Permanent Works,

(ii) damage which is an unavoidable result of the Contractor's obligations to execute the Works and remedy any defects, and

(iii) a cause listed in Sub-Clause 17.3 [Employer's Risks], except to the extent that cover is available at commercially reasonable terms.

18.4 Insurance for Contractor's Personnel

The Contractor shall effect and maintain insurance against liability for claims, damages, losses and expenses (including legal fees and expenses) arising from injury, sickness, disease or death of any person employed by the Contractor or any other of the Contractor's Personnel.

The insurance shall cover the Employer and the Engineer against liability for claims, damages, losses and expenses (including legal fees and expenses) arising from injury, sickness, disease or death of any person employed by the Contractor or any other of the Contractor's Personnel, except that this insurance may exclude losses and claims to the extent that they arise from any act or neglect of the Employer or of the Employer's Personnel.

The insurance shall be maintained in full force and effect during the whole time that these personnel are assisting in the execution of the Works. For a Subcontractor's employees, the insurance may be effected by the Subcontractor, but the Contractor shall be responsible for compliance with this Clause.

19 Force Majeure

19.1 Definition of Force Majeure

In this Clause, "Force Majeure" means an exceptional event or circumstance:

(a) which is beyond a Party's control,

(b) which such Party could not reasonably have provided against before entering into the Contract,

(c) which, having arisen, such Party could not reasonably have avoided or overcome, and

(d) which is not substantially attributable to the other Party.

Force Majeure may include, but is not limited to, exceptional events or circumstances of the kind listed below, so long as conditions (a) to (d) above are satisfied:

(i) war, hostilities (whether war be declared or not), invasion, act of foreign enemies,

(ii) rebellion, terrorism, sabotage by persons other than the Contractor's Personnel, revolution, insurrection, military or usurped power, or civil war,

(iii) riot, commotion, disorder, strike or lockout by persons other than the Contractor's Personnel,

(iv) munitions of war, explosive materials, ionising radiation or contamination by radio-activity, except as may be attributable to the Contractor's use of such munitions, explosives, radiation or radio-activity, and

(v) natural catastrophes such as earthquake, hurricane, typhoon or volcanic activity.

19.2 Notice of Force Majeure

If a Party is or will be prevented from performing its substantial obligations under the Contract by Force Majeure, then it shall give notice to the other Party of the event or circumstances constituting the Force Majeure and shall specify the obligations, the performance of which is or will be prevented. The notice shall be given within 14 days after the Party became aware, or should have become aware, of the relevant event or circumstance constituting Force Majeure.

The Party shall, having given notice, be excused performance of its obligations for so long as such Force Majeure prevents it from performing them.

Notwithstanding any other provision of this Clause, Force Majeure shall not apply to obligations of either Party to make payments to the other Party under the Contract

19.3 Duty to Minimise Delay

Each Party shall at all times use all reasonable endeavours to minimise any delay in the performance of the Contract as a result of Force Majeure.

A Party shall give notice to the other Party when it ceases to be affected by the Force Majeure.

19.4 Consequences of Force Majeure

If the Contractor is prevented from performing his substantial obligations under the Contract by Force Majeure of which notice has been given under Sub-Clause 19.2 [Notice of Force Majeure], and suffers delay and/or incurs Cost by reason of such Force Majeure, the Contractor shall be entitled subject to Sub-Clause 20.1 [Contractor's Claims] to:

(a) an extension of time for any such delay, if completion is or will be delayed, under Sub-Clause 8.4 [Extension of Time for Completion], and

(b) if the event or circumstance is of the kind described in sub-paragraphs (i) to (iv) of Sub-Clause 19.1 [Definition of Force Majeure] and, in sub-paragraphs (ii) to (iv), occurs in the Country, payment of any such Cost, including the costs of rectifying or replacing the Works and/or Goods damaged or destroyed by Force Majeure, to the extent they are not indemnified through the insurance policy referred to in Sub-Clause 18.2 [Insurance for Works and Contractor's Equipment].

After receiving this notice, the Engineer shall proceed in accordance with Sub-Clause 3.5 [Determinations] to agree or determine these matters.

19.5 Force Majeure Affecting Subcontractor

If any Subcontractor is entitled under any contract or agreement relating to the Works to relief from force majeure on terms additional to or broader than those specified in this Clause, such additional or broader force majeure events or circumstances shall not excuse the Contractor's non-performance or entitle him to relief under this Clause.

19.6 Optional Termination, Payment and Release

If the execution of substantially all the Works in progress is prevented for a continuous period of 84 days by reason of Force Majeure of which notice has been given under Sub-Clause 19.2 [Notice of Force Majeure], or for multiple periods which total more than 140 days due to the same notified Force Majeure, then either Party may give to the other Party a notice of termination of the Contract. In this event, the termination shall take effect 7 days after the notice is given, and the Contractor shall proceed in accordance with Sub-Clause 16.3 [Cessation of Work and Removal of Contractor's Equipment].

Upon such termination, the Engineer shall determine the value of the work done and issue a Payment Certificate which shall include:

(a) the amounts payable for any work carried out for which a price is stated in the Contract;

(b) the Cost of Plant and Materials ordered for the Works which have been delivered to the Contractor, or of which the Contractor is liable to accept delivery: this Plant and Materials shall become the property of (and be at the risk of) the Employer when paid for by the Employer, and the Contractor shall place the same at the Employer's disposal;

(c) other Cost or liabilities which in the circumstances were reasonably and necessarily incurred by the Contractor in the expectation of completing the Works;

(d) the Cost of removal of Temporary Works and Contractor's Equipment from the Site and the return of these items to the Contractor's works in his country (or to any other destination at no greater cost); and

(e) the Cost of repatriation of the Contractor's staff and labour employed wholly in connection with the Works at the date of termination.

19.7 Release from Performance

Notwithstanding any other provision of this Clause, if any event or circumstance outside the control of the Parties (including, but not limited to, Force Majeure) arises which makes it impossible or unlawful for either or both Parties to fulfil its or their contractual obligations or which, under the law governing the Contract, entitles the Parties to be released from further performance of the Contract, then upon notice by either Party to the other Party of such event or circumstance:

(a) the Parties shall be discharged from further performance, without prejudice to the rights of either Party in respect of any previous breach of the Contract, and

(b) the sum payable by the Employer to the Contractor shall be the same as would have been payable under Sub-Clause 19.6 [Optional Termination, Payment and Release] if the Contract had been terminated under Sub-Clause 19.6.

20 Claims, Disputes and Arbitration

20.1 Contractor's Claims

If the Contractor considers himself to be entitled to any extension of the Time for Completion and/or any additional payment, under any Clause of these Conditions or otherwise in connection with the Contract, the Contractor shall give notice to the Engineer, describing the event or circumstance giving rise to the claim. The notice shall be given as soon as practicable, and not later than 28 days after the Contractor became aware, or should have become aware, of the event or circumstance.

If the Contractor fails to give notice of a claim within such period of 28 days, the Time for Completion shall not be extended, the Contractor shall not be entitled to additional payment, and the Employer shall be discharged from all liability in connection with the claim. Otherwise, the following provisions of this Sub-Clause shall apply.

The Contractor shall also submit any other notices which are required by the Contract, and supporting particulars for the claim, all as relevant to such event or circumstance.

The Contractor shall keep such contemporary records as may be necessary to substantiate any claim, either on the Site or at another location acceptable to the Engineer. Without admitting the Employer's liability, the Engineer may, after receiving any notice under this Sub-Clause, monitor the record-keeping and/or instruct the Contractor to keep further contemporary records. The Contractor shall permit the Engineer to inspect all these records, and shall (if instructed) submit copies to the Engineer.

Within 42 days after the Contractor became aware (or should have become aware) of the event or circumstance giving rise to the claim, or within such other period as may be proposed by the Contractor and approved by the Engineer, the Contractor shall send to the Engineer a fully detailed claim which includes full supporting particulars of the basis of the claim and of the extension of time and/or additional payment claimed. If the event or circumstance giving rise to the claim has a continuing effect:

(a) this fully detailed claim shall be considered as interim;

(b) the Contractor shall send further interim claims at monthly intervals, giving the accumulated delay and/or amount claimed, and such further particulars as the Engineer may reasonably require; and

(c) the Contractor shall send a final claim within 28 days after the end of the effects resulting from the event or circumstance, or within such other period as may be proposed by the Contractor and approved by the Engineer.

COPYRIGHT FIDIC JUNE 2010

Within 42 days after receiving a claim or any further particulars supporting a previous claim, or within such other period as may be proposed by the Engineer and approved by the Contractor, the Engineer shall respond with approval, or with disapproval and detailed comments. He may also request any necessary further particulars, but shall nevertheless give his response on the principles of the claim within the above defined time period.

Within the above defined period of 42 days, the Engineer shall proceed in accordance with Sub-Clause 3.5 [Determinations] to agree or determine (i) the extension (if any) of the Time for Completion (before or after its expiry) in accordance with Sub-Clause 8.4 [Extension of Time for Completion], and/or (ii) the additional payment (if any) to which the Contractor is entitled under the Contract.

Each Payment Certificate shall include such additional payment for any claim as has been reasonably substantiated as due under the relevant provision of the Contract. Unless and until the particulars supplied are sufficient to substantiate the whole of the claim, the Contractor shall only be entitled to payment for such part of the claim as he has been able to substantiate.

If the Engineer does not respond within the timeframe defined in this Clause, either Party may consider that the claim is rejected by the Engineer and any of the Parties may refer to the Dispute Board in accordance with Sub-Clause 20.4 [Obtaining Dispute Board's Decision].

The requirements of this Sub-Clause are in addition to those of any other Sub-Clause which may apply to a claim. If the Contractor fails to comply with this or another Sub-Clause in relation to any claim, any extension of time and/or additional payment shall take account of the extent (if any) to which the failure has prevented or prejudiced proper investigation of the claim, unless the claim is excluded under the second paragraph of this Sub-Clause.

20.2 Appointment of the Dispute Board

Disputes shall be referred to a DB for decision in accordance with Sub-Clause 20.4 [Obtaining Dispute Board's Decision]. The Parties shall appoint a DB by the date stated in the Contract Data.

The DB shall comprise, as stated in the Contract Data, either one or three suitably qualified persons ("the members"), each of whom shall be fluent in the language for communication defined in the Contract and shall be a professional experienced in the type of construction involved in the Works and with the interpretation of contractual documents. If the number is not so stated and the Parties do not agree otherwise, the DB shall comprise three persons.

If the Parties have not jointly appointed the DB 21 days before the date stated in the Contract Data and the DB is to comprise three persons, each Party shall nominate one member for the approval of the other Party. The first two members shall recommend and the Parties shall agree upon the third member, who shall act as chairman.

However, if a list of potential members has been agreed by the Parties and is included in the Contract, the members shall be selected from those on the list, other than anyone who is unable or unwilling to accept appointment to the DB.

The agreement between the Parties and either the sole member or each of the three members shall incorporate by reference the General Conditions of Dispute Board Agreement contained in the Appendix to these General Conditions, with such amendments as are agreed between them.

The terms of the remuneration of either the sole member or each of the three members, including the remuneration of any expert whom the DB consults, shall be mutually agreed upon by the Parties when agreeing the terms of appointment. Each Party shall be responsible for paying one-half of this remuneration.

If at any time the Parties so agree, they may jointly refer a matter to the DB for it to give its opinion. Neither Party shall consult the DB on any matter without the agreement of the other Party.

If a member declines to act or is unable to act as a result of death, disability, resignation or termination of appointment, a replacement shall be appointed in the same manner as the replaced person was required to have been nominated or agreed upon, as described in this Sub-Clause.

The appointment of any member may be terminated by mutual agreement of both Parties, but not by the Employer or the Contractor acting alone. Unless otherwise agreed by both Parties, the appointment of the DB (including each member) shall expire when the discharge referred to in Sub-Clause 14.12 [Discharge] shall have become effective.

20.3 Failure to Agree on the Composition of the Dispute Board

If any of the following conditions apply, namely:

(a) the Parties fail to agree upon the appointment of the sole member of the DB by the date stated in the first paragraph of Sub-Clause 20.2, [Appointment of the Dispute Board]

(b) either Party fails to nominate a member (for approval by the other Party), or fails to approve a member nominated by the other Party, of a DB of three persons by such date,

(c) the Parties fail to agree upon the appointment of the third member (to act as chairman) of the DB by such date, or

(d) the Parties fail to agree upon the appointment of a replacement person within 42 days after the date on which the sole member or one of the three members declines to act or is unable to act as a result of death, disability, resignation or termination of appointment,

then the appointing entity or official named in the Contract Data shall, upon the request of either or both of the Parties and after due consultation with both Parties, appoint this member of the DB. This appointment shall be final and conclusive. Each Party shall be responsible for paying one-half of the remuneration of the appointing entity or official.

20.4 Obtaining Dispute Board's Decision

If a dispute (of any kind whatsoever) arises between the Parties in connection with, or arising out of, the Contract or the execution of the Works, including any dispute as to any certificate, determination, instruction, opinion or valuation of the Engineer, either Party may refer the dispute in writing to the DB for its decision, with copies to the other Party and the Engineer. Such reference shall state that it is given under this Sub-Clause.

For a DB of three persons, the DB shall be deemed to have received such reference on the date when it is received by the chairman of the DB.

Both Parties shall promptly make available to the DB all such additional information, further access to the Site, and appropriate facilities, as the DB may require for the purposes of making a decision on such dispute. The DB shall be deemed to be not acting as arbitrator(s).

Within 84 days after receiving such reference, or within such other period as may be proposed by the DB and approved by both Parties, the DB shall give its decision, which shall be reasoned and shall state that it is given under this Sub-Clause. The decision shall be binding on both Parties, who shall promptly give effect to it unless and until it shall be revised in an amicable settlement or an arbitral award as described below. Unless the Contract has already been abandoned, repudiated or terminated, the Contractor shall continue to proceed with the Works in accordance with the Contract.

If either Party is dissatisfied with the DB's decision, then either Party may, within 28 days after receiving the decision, give a Notice of Dissatisfaction to the other Party indicating its dissatisfaction and intention to commence arbitration. If the DB fails to give its decision within the period of 84 days (or as otherwise approved) after receiving such reference, then either Party may, within 28 days after this period has expired, give a Notice of Dissatisfaction to the other Party.

In either event, this Notice of Dissatisfaction shall state that it is given under this Sub-Clause, and shall set out the matter in dispute and the reason(s) for dissatisfaction. Except as stated in Sub-Clause 20.7 [Failure to Comply with Dispute Board's Decision] and Sub-Clause 20.8 [Expiry of Dispute Board's Appointment], neither Party shall be entitled to commence arbitration of a dispute unless a Notice of Dissatisfaction has been given in accordance with this Sub-Clause.

If the DB has given its decision as to a matter in dispute to both Parties, and no Notice of Dissatisfaction has been given by either Party within 28 days after it received the DB's decision, then the decision shall become final and binding upon both Parties.

20.5 Amicable Settlement

Where a Notice of Dissatisfaction has been given under Sub-Clause 20.4 above, both Parties shall attempt to settle the dispute amicably before the commencement of arbitration. However, unless both Parties agree otherwise, the Party giving a Notice of Dissatisfaction in accordance with Sub-Clause 20.4 above should move to commence arbitration after the fifty-sixth day from the day on which a Notice of Dissatisfaction was given, even if no attempt at an amicable settlement has been made.

20.6 Arbitration

Any dispute between the Parties arising out of or in connection with the Contract not settled amicably in accordance with Sub-Clause 20.5 above and in respect of which the DB's decision (if any) has not become final and binding shall be finally settled by arbitration. Arbitration shall be conducted as follows:

(a) if the contract is with foreign contractors,

(i) for contracts financed by all participating Banks except under sub-paragraph (a) (2) below:

international arbitration (1) with proceedings administered by the arbitration institution designated in the Contract Data, and conducted under the rules of arbitration of such institution; or, if so specified in the Contract Data, (2) international arbitration in accordance with the arbitration rules of the United Nations Commission on International Trade Law (UNCITRAL); or (3) if neither an arbitration institution nor UNCITRAL arbitration rules are specified in the Contract Data, with proceedings administered by the International Chamber of Commerce (ICC) and conducted under the ICC Rules of Arbitration; by one or more arbitrators appointed in accordance with said arbitration rules.

(ii) for contracts financed by the Asian Development Bank:

international arbitration (1) with proceedings administered by the arbitration institution specified in the Contract Data and conducted under the rules of arbitration of such institution unless it is specified in the Contract Data that the arbitration shall be conducted under the rules of the United Nations Commission on International Trade Law (UNCITRAL) and if UNCITRAL Rules are so specified then the named arbitration institution shall be the appointing authority and shall administer the arbitration); or (2) if an arbitration institution is not specified in the Contract Data, with proceedings administered by the Singapore International Arbitration Centre (SIAC) and conducted under the SIAC Rules, by one or more arbitrators appointed in accordance with the said arbitration rules.

(b) if the Contract is with domestic contractors, arbitration with proceedings conducted in accordance with the laws of the Employer's country.

The place of arbitration shall be the neutral location specified in the Contract Data; and the arbitration shall be conducted in the language for communications defined in Sub-Clause 1.4 [Law and Language].

The arbitrators shall have full power to open up, review and revise any certificate, determination, instruction, opinion or valuation of the Engineer, and any decision of the DB, relevant to the dispute. Nothing shall disqualify representatives of the Parties and the Engineer from being called as a witness and giving evidence before the arbitrators on any matter whatsoever relevant to the dispute.

Neither Party shall be limited in the proceedings before the arbitrators to the evidence or arguments previously put before the DB to obtain its decision, or to the reasons for dissatisfaction given in its Notice of Dissatisfaction. Any decision of the DB shall be admissible in evidence in the arbitration.

Arbitration may be commenced prior to or after completion of the Works. The obligations of the Parties, the Engineer and the DB shall not be altered by reason of any arbitration being conducted during the progress of the Works.

20.7 Failure to Comply with Dispute Board's Decision

In the event that a Party fails to comply with a final and binding DB decision, then the other Party may, without prejudice to any other rights it may have, refer the failure itself to arbitration under Sub-Clause 20.6 [Arbitration]. Sub-Clause 20.4 [Obtaining Dispute Board's Decision] and Sub-Clause 20.5 [Amicable Settlement] shall not apply to this reference.

20.8 Expiry of Dispute Board's Appointment

If a dispute arises between the Parties in connection with, or arising out of, the Contract or the execution of the Works and there is no DB in place, whether by reason of the expiry of the DB's appointment or otherwise:

(a) Sub-Clause 20.4 [Obtaining Dispute Board's Decision] and Sub-Clause 20.5 [Amicable Settlement] shall not apply, and

(b) the dispute may be referred directly to arbitration under Sub-Clause 20.6 [Arbitration].

APPENDIX

A General Conditions of Dispute Board Agreement

1 Definitions

Each "Dispute Board Agreement" is a tripartite agreement by and between:

(a) the "Employer";

(b) the "Contractor"; and

(c) the "Member" who is defined in the Dispute Board Agreement as being:

(i) the sole member of the "DB" and, where this is the case, all references to the "Other Members" do not apply, or

(ii) one of the three persons who are jointly called the "DB" (or "Dispute Board") and, where this is the case, the other two persons are called the "Other Members".

The Employer and the Contractor have entered (or intend to enter) into a contract, which is called the "Contract" and is defined in the Dispute Board Agreement, which incorporates this Appendix. In the Dispute Board Agreement, words and expressions which are not otherwise defined shall have the meanings assigned to them in the Contract.

2 General Provisions

Unless otherwise stated in the Dispute Board Agreement, it shall take effect on the latest of the following dates:

(a) the Commencement Date defined in the Contract,

(b) when the Employer, the Contractor and the Member have each signed the Dispute Board Agreement, or

(c) when the Employer, the Contractor and each of the Other Members (if any) have respectively each signed a dispute board agreement.

This employment of the Member is a personal appointment. At any time, the Member may give not less than 70 days' notice of resignation to the Employer and to the Contractor, and the Dispute Board Agreement shall terminate upon the expiry of this period.

3 Warranties

The Member warrants and agrees that he/she is and shall be impartial and independent of the Employer, the Contractor and the Engineer. The Member shall promptly disclose, to each of them and to the Other Members (if any), any fact or circumstance which might appear inconsistent with his/her warranty and agreement of impartiality and independence.

When appointing the Member, the Employer and the Contractor relied upon the Member's representations that he/she is:

(a) experienced in the work which the Contractor is to carry out under the Contract,

(b) experienced in the interpretation of contract documentation, and

(c) fluent in the language for communications defined in the Contract.

4 General Obligations of the Member

The Member shall:

(a) have no interest financial or otherwise in the Employer, the Contractor or Engineer, nor any financial interest in the Contract except for payment under the Dispute Board Agreement;

(b) not previously have been employed as a consultant or otherwise by the Employer, the Contractor or the Engineer, except in such circumstances as were disclosed in writing to the Employer and the Contractor before they signed the Dispute Board Agreement;

(c) have disclosed in writing to the Employer, the Contractor and the Other Members (if any), before entering into the Dispute Board Agreement and to his/her best knowledge and recollection, any professional or personal relationships with any director, officer or employee of the Employer, the Contractor or the Engineer, and any previous involvement in the overall project of which the Contract forms part;

(d) not, for the duration of the Dispute Board Agreement, be employed as a consultant or otherwise by the Employer, the Contractor or the Engineer, except as may be agreed in writing by the Employer, the Contractor and the Other Members (if any);

(e) comply with the annexed procedural rules and with Sub-Clause 20.4 of the Conditions of Contract;

(f) not give advice to the Employer, the Contractor, the Employer's Personnel or the Contractor's Personnel concerning the conduct of the Contract, other than in accordance with the annexed procedural rules;

(g) not while a Member enter into discussions or make any agreement with the Employer, the Contractor or the Engineer regarding employment by any of them, whether as a consultant or otherwise, after ceasing to act under the Dispute Board Agreement;

(h) ensure his/her availability for all site visits and hearings as are necessary;

(i) become conversant with the Contract and with the progress of the Works (and of any other parts of the project of which the Contract forms part) by studying all documents received which shall be maintained in a current working file;

(j) treat the details of the Contract and all the DB's activities and hearings as private and confidential, and not publish or disclose them without the prior written consent of the Employer, the Contractor and the Other Members (if any); and

(k) be available to give advice and opinions, on any matter relevant to the Contract when requested by both the Employer and the Contractor, subject to the agreement of the Other Members (if any).

5 General Obligations of the Employer and the Contractor

The Employer, the Contractor, the Employer's Personnel and the Contractor's Personnel shall not request advice from or consultation with the Member regarding the Contract, otherwise than in the normal course of the DB's activities under the Contract and the Dispute Board Agreement. The Employer and the Contractor shall be responsible for compliance with this provision, by the Employer's Personnel and the Contractor's Personnel respectively.

The Employer and the Contractor undertake to each other and to the Member that the Member shall not, except as otherwise agreed in writing by the Employer, the Contractor, the Member and the Other Members (if any):

(a) be appointed as an arbitrator in any arbitration under the Contract;

(b) be called as a witness to give evidence concerning any dispute before arbitrator(s) appointed for any arbitration under the Contract; or

(c) be liable for any claims for anything done or omitted in the discharge or purported discharge of the Member's functions, unless the act or omission is shown to have been in bad faith.

The Employer and the Contractor hereby jointly and severally indemnify and hold the Member harmless against and from claims from which he is relieved from liability under the preceding paragraph.

Whenever the Employer or the Contractor refers a dispute to the DB under Sub-Clause 20.4 of the Conditions of Contract, which will require the Member to make a site visit and attend a hearing, the Employer or the Contractor shall provide appropriate security for a sum equivalent to the reasonable expenses to be incurred by the Member. No account shall be taken of any other payments due or paid to the Member.

6 Payment

The Member shall be paid as follows, in the currency named in the Dispute Board Agreement:

(a) a retainer fee per calendar month, which shall be considered as payment in full for:

(i) being available on 28 days' notice for all Site visits and hearings;

(ii) becoming and remaining conversant with all project developments and maintaining relevant files;

(iii) all office and overhead expenses including secretarial services, photocopying and office supplies incurred in connection with his duties; and

(iv) all services performed hereunder except those referred to in sub-paragraphs (b) and (c) of this Clause.

The retainer fee shall be paid with effect from the last day of the calendar month in which the Dispute Board Agreement becomes effective; until the last day of the calendar month in which the Taking-Over Certificate is issued for the whole of the Works.

With effect from the first day of the calendar month following the month in which the Taking-Over Certificate is issued for the whole of the Works, the retainer fee shall be reduced by one third .This reduced fee shall be paid until the first day of the calendar month in which the Member resigns or the Dispute Board Agreement is otherwise terminated.

(b) a daily fee which shall be considered as payment in full for:

(i) each day or part of a day up to a maximum of two days' travel time in each direction for the journey between the Member's home and the Site, or another location of a meeting with the Other Members (if any);

(ii) each working day on Site visits, hearings or preparing decisions; and

(iii) each day spent reading submissions in preparation for a hearing.

(c) all reasonable expenses including necessary travel expenses (air fare in less than first class, hotel and subsistence and other direct travel expenses) incurred in connection with the Member's duties, as well as the cost of telephone calls, courier charges, faxes and telexes: a receipt shall be required for each item in excess of five percent of the daily fee referred to in sub-paragraph (b) of this Clause;

(d) any taxes properly levied in the Country on payments made to the Member (unless a national or permanent resident of the Country) under this Clause 6.

The retainer and daily fees shall be as specified in the Dispute Board Agreement. Unless it specifies otherwise, these fees shall remain fixed for the first 24 calendar months, and shall thereafter be adjusted by agreement between the Employer, the Contractor and the Member, at each anniversary of the date on which the Dispute Board Agreement became effective.

If the parties fail to agree on the retainer fee or the daily fee, the appointing entity or official named in the Contract Data shall determine the amount of the fees to be used.

The Member shall submit invoices for payment of the monthly retainer and air fares quarterly in advance. Invoices for other expenses and for daily fees shall be submitted following the conclusion of a Site visit or hearing. All invoices shall be accompanied by a brief description of activities performed during the relevant period and shall be addressed to the Contractor.

The Contractor shall pay each of the Member's invoices in full within 56 calendar days after receiving each invoice and shall apply to the Employer (in the Statements under the Contract) for reimbursement of one-half of the amounts of these invoices. The Employer shall then pay the Contractor in accordance with the Contract.

If the Contractor fails to pay to the Member the amount to which he/she is entitled under the Dispute Board Agreement, the Employer shall pay the amount due to the Member and any other amount which may be required to maintain the operation of the DB; and without prejudice to the Employer's rights or remedies. In addition to all other rights arising from this default, the Employer shall be entitled to reimbursement of all sums paid in excess of one-half of these payments, plus all costs of recovering these sums and financing charges calculated at the rate specified in Sub-Clause 14.8 of the Conditions of Contract.

If the Member does not receive payment of the amount due within 70 days after submitting a valid invoice, the Member may (i) suspend his/her services (without notice) until the payment is received, and/or (ii) resign his/her appointment by giving notice under Clause 7.

7 Termination

At any time: (i) the Employer and the Contractor may jointly terminate the Dispute Board Agreement by giving 42 days' notice to the Member; or (ii) the Member may resign as provided for in Clause 2.

If the Member fails to comply with the Dispute Board Agreement, the Employer and the Contractor may, without prejudice to their other rights, terminate it by notice to the Member. The notice shall take effect when received by the Member.

If the Employer or the Contractor fails to comply with the Dispute Board Agreement, the Member may, without prejudice to his other rights, terminate it by notice to the Employer and the Contractor. The notice shall take effect when received by them both.

Any such notice, resignation and termination shall be final and binding on the Employer, the Contractor and the Member. However, a notice by the Employer or the Contractor, but not by both, shall be of no effect.

8 Default of the Member

If the Member fails to comply with any of his obligations under Clause 4 (a) - (d) above, he shall not be entitled to any fees or expenses hereunder and shall, without prejudice to their other rights, reimburse each of the Employer and the Contractor for any fees and expenses received by the Member and the Other Members (if any), for proceedings or decisions (if any) of the DB which are rendered void or ineffective by the said failure to comply.

If the Member fails to comply with any of his obligations under Clause 4 (e) - (k) above, he shall not be entitled to any fees or expenses hereunder from the date and to the extent of the non-compliance and shall, without prejudice to their other rights, reimburse each of the Employer and the Contractor for any fees and expenses already received by the Member, for proceedings or decisions (if any) of the DB which are rendered void or ineffective by the said failure to comply.

9 Disputes

Any dispute or claim arising out of or in connection with this Dispute Board Agreement, or the breach, termination or invalidity thereof, shall be finally settled by institutional arbitration. If no other arbitration institute is agreed, the arbitration shall be conducted under the Rules of Arbitration of the International Chamber of Commerce by one arbitrator appointed in accordance with these Rules of Arbitration.

PROCEDURAL RULES

1 Unless otherwise agreed by the Employer and the Contractor, the DB shall visit the Site at intervals of not more than 140 days, including times of critical construction events, at the request of either the Employer or the Contractor. Unless otherwise agreed by the Employer, the Contractor and the DB, the period between consecutive visits shall not be less than 70 days, except as required to convene a hearing as described below.

2 The timing of and agenda for each Site visit shall be as agreed jointly by the DB, the Employer and the Contractor, or in the absence of agreement, shall be decided by the DB. The purpose of Site visits is to enable the DB to become and remain acquainted with the progress of the Works and of any actual or potential problems or claims, and, as far as reasonable, to endeavour to prevent potential problems or claims from becoming disputes.

3 Site visits shall be attended by the Employer, the Contractor and the Engineer and shall be co-ordinated by the Employer in co-operation with the Contractor. The Employer shall ensure the provision of appropriate conference facilities and secretarial and copying services. At the conclusion of each Site visit and before leaving the site, the DB shall prepare a report on its activities during the visit and shall send copies to the Employer and the Contractor.

4 The Employer and the Contractor shall furnish to the DB one copy of all documents which the DB may request, including Contract documents, progress reports, variation instructions, certificates and other documents pertinent to the performance of the Contract. All communications between the DB and the Employer or the Contractor shall be copied to the other Party. If the DB comprises three persons, the Employer and the Contractor shall send copies of these requested documents and these communications to each of these persons.

COPYRIGHT FIDIC JUNE 2010

5 If any dispute is referred to the DB in accordance with Sub-Clause 20.4 of the Conditions of Contract, the DB shall proceed in accordance with Sub-Clause 20.4 and these Rules. Subject to the time allowed to give notice of a decision and other relevant factors, the DB shall:

(a) act fairly and impartially as between the Employer and the Contractor, giving each of them a reasonable opportunity of putting his case and responding to the other's case, and

(b) adopt procedures suitable to the dispute, avoiding unnecessary delay or expense.

6 The DB may conduct a hearing on the dispute, in which event it will decide on the date and place for the hearing and may request that written documentation and arguments from the Employer and the Contractor be presented to it prior to or at the hearing.

7 Except as otherwise agreed in writing by the Employer and the Contractor, the DB shall have power to adopt an inquisitorial procedure, to refuse admission to hearings or audience at hearings to any persons other than representatives of the Employer, the Contractor and the Engineer, and to proceed in the absence of any party who the DB is satisfied received notice of the hearing; but shall have discretion to decide whether and to what extent this power may be exercised.

8 The Employer and the Contractor empower the DB, among other things, to:

(a) establish the procedure to be applied in deciding a dispute,

(b) decide upon the DB's own jurisdiction, and as to the scope of any dispute referred to it,

(c) conduct any hearing as it thinks fit, not being bound by any rules or procedures other than those contained in the Contract and these Rules.

(d) take the initiative in ascertaining the facts and matters required for a decision,

(e) make use of its own specialist knowledge, if any,

(f) decide upon the payment of financing charges in accordance with the Contract,

(g) decide upon any provisional relief such as interim or conservatory measures, and

(h) open up, review and revise any certificate, decision, determination, instruction, opinion or valuation of the Engineer, relevant to the dispute.

9 The DB shall not express any opinions during any hearing concerning the merits of any arguments advanced by the Parties. Thereafter, the DB shall make and give its decision in accordance with Sub-Clause 20.4, or as otherwise agreed by the Employer and the Contractor in writing. If the DB comprises three persons:

(a) it shall convene in private after a hearing, in order to have discussions and prepare its decision;

(b) it shall endeavour to reach a unanimous decision: if this proves impossible the applicable decision shall be made by a majority of the Members, who may require the minority Member to prepare a written report for submission to the Employer and the Contractor; and

(c) if a Member fails to attend a meeting or hearing, or to fulfil any required function, the other two Members may nevertheless proceed to make a decision, unless:

(i) either the Employer or the Contractor does not agree that they do so, or

(ii) the absent Member is the chairman and he/she instructs the other Members to not make a decision.

Section 8

Particular Conditions of Contract (PCC)

Blank Page

Section 8 - Particular Conditions of Contract (PCC)

The following Particular Conditions of Contract (PCC) shall supplement the General Conditions of Contract (GCC). Whenever there is a conflict, the provisions herein shall prevail over those in the GCC.

Part A - Contract Data

Conditions	Ref. GCC	Data
Employer's name and address	1.1.2.2 & 1.3	The Employer is: Himachal Pradesh Tourism Development Board (HPTDB), represented by the Mission Director, Infrastructure Development Investment Program for Tourism, State of Himachal Pradesh, (IDIPT-HP). The Address is: Himachal Pradesh Tourism Development Board (HPTDB) Department of Tourism and Civil Aviation First Floor, U S Club Shimla – 171 001 HP, India. Tel: +91-177-2659962, 2659926, Fax: +91-177- 2659925 Email: projectdirector.adbhp@gmail.com
Engineer's name and address	1.1.2.4 & 1.3	Project Director, IDIPT-HP First Floor, U S Club Shimla – 171 001 HP, India. Tel: +91-177-2659962, 2659926, Fax: +91-177- 2659925 Email: projectdirector.adbhp@gmail.com
Parties and Persons	1.1.2.6	The Project Management Unit, IDIPT-HP based at Shimla; The Project Implementation Unit (Kullu) based at Sundernagar; The Project Management Consultant (PMC) for IDIPT-HP based at Shimla, as appointed by the Employer to assist in management of project works under IDIPT-HP and the Design and Supervision Consultant (DSC) for IDIPT-HP (Kullu) based at Sundernagar, as appointed by the Employer to assist in Design /Supervision /Contract Administration of Works under IDIPT-HP. Any communication given by the Employer's persons, so notified shall have the same effect as though it had been given by the Employer.
Bank's name	1.1.2.11	Asian Development Bank (ADB)
Borrower's name	1.1.2.12	India
Time for Completion	1.1.3.3	18 calendar months
Defects Notification Period	1.1.3.7	365 days
Sections	1.1.5.6	Not applicable
Electronic transmission systems	1.3	Facsimile/electronic mail
Governing Law	1.4	The law of the State of Himachal Pradesh
Ruling language	1.4	English
Language for communications	1.4	English
Priority of Documents	1.5	The following documents also form part of the Contract: • Environmental Management Plan (Abstract of the Initial Environmental Examination) attached as **Appendix 6-1** • Due Diligence Report (DDR) / Resettlement Plan (RP) attached as **Appendix 6-2**

<table>
<tr><th>Conditions</th><th>Ref. GCC</th><th>Data</th></tr>
<tr><td>Right of access to the Site - Time</td><td>2.1</td><td>7 days from the Commencement Date.</td></tr>
<tr><td>Engineer's Duties and Authority</td><td>3.1 (B) (ii)</td><td>Engineer will approve the contract variation for the quantities limited to 20% of Bill of quantities and within BOQ rates only subject to maximum of 10 % of the Accepted Contract Amount. Further increase beyond above limit shall require prior approval of the Employer.</td></tr>
<tr><td>Contractor's General Obligations</td><td>4.1</td><td>The following items shall be designed and executed by the Contractor after approval of the Engineer:
• Temporary works
• Lighting
• Paneling for Acoustics System</td></tr>
<tr><td>Performance Security</td><td>4.2</td><td>The performance security will be in the form of an unconditional bank guarantee in the amount(s) of Ten (10) percent of the Contract Price. If the Bank issuing the Security is located outside India, it shall have a correspondent Bank located in the territory of India to make it enforceable.</td></tr>
<tr><td>Sub-Contracting</td><td>4.4</td><td>The maximum contract value that can be subcontracted is limited to 25% and the major items of works shall not be subcontracted without approval of the Employer.</td></tr>
<tr><td>Normal working hours</td><td>6.5</td><td>8:00 am to 6:00 pm (with one hour Break). Late workings with prior approval of the Engineer</td></tr>
<tr><td>Commencement Date</td><td>8.1</td><td>The commencement shall be 10 days from the date of NTP (Notice to Proceed) or from the date of issue of working drawings whichever is later.</td></tr>
<tr><td>Time for completion</td><td>8.2</td><td>The work shall be completed as per the following mile stones (MS) :
<table>
<tr><th>Work</th><th>MS - 1
1 to 5 months</th><th>MS - 2
6 to 9 months</th><th>MS - 3
10 to 14 months</th><th>MS - 4
15 to 18 months</th></tr>
<tr><td>Financial Progress</td><td>25 %</td><td>45 %</td><td>70 %</td><td>100 %</td></tr>
</table></td></tr>
<tr><td>Work programme</td><td>8.3</td><td>The Contractor shall submit the Work Program within 21 (twenty one) days of issuance of the Letter of Acceptance. The work should progress accordingly to the milestone fixed as per contractor's approved work programme and the Contractor is responsible to attain the approved milestone. The progress will be reviewed monthly.</td></tr>
<tr><td>Delay damages for the Works</td><td>8.7 & 14.15(b)</td><td>0.05 % of the Contract Price per day, in the currencies and proportions in which the Contract Price is payable. If the previous mile stone is not achieved during the subsequent mile stones, the penalty will continue along with the penalty for the non-achieved milestones till it is achieved. The maximum penalty shall not exceed 10% of final Contract Price</td></tr>
<tr><td>Maximum amount of delay damages</td><td>8.7</td><td>10 % of the Contract Price.</td></tr>
<tr><td>Provisional Sum</td><td>13.5</td><td>Rs 12,00,000/- for environmental testing.
A handling fee of 5% (Five percent) shall be payable to the Contractor on the actual cost of any approved expenditures under as Provisional Sum items.</td></tr>
<tr><td>Adjustments for Changes in Cost; Table of Adjustment Data</td><td>13.8</td><td>The Contract Price shall not be adjustable during Contract Execution.
Period "n" applicable to the adjustment multiplier "Pn": 3 months. The indices will be average of 3 months.</td></tr>
</table>

Conditions	Ref. GCC	Data
The Contract Price	14.1	The following sentence under Clause 14.1 shall not apply: "*Notwithstanding the provisions of sub-paragraph (b), Contractor's Equipment, including essential spare parts there for, imported by the Contractor for the sole purpose of executing the Contract shall be exempt from the payment of import duties and taxes upon importation."*
Total advance payment	14.2	10% of the Accepted Contract Amount payable in two installments in the currencies and proportions in which the Accepted Contract Amount is payable. First installment of 5% will be given immediately after signing the agreement and on submission of advance payment security. Second installment of 5% will be given after establishing the contractors and Engineers site office; submission of work program and mobilization of equipment as detailed in Section 3 and Section 6.
Repayment amortization of advance payment	14.2(b)	12.5 %
Percentage of Retention	14.3 (c)	5 % from each claim bill
Limit of Retention Money	14.3 (c)	5 % of the Accepted Contract Amount
Minimum Amount of Interim Payment Certificates	14.6	2 % of the Accepted Contract Amount. However, this limit will not apply to the last two claims.
Currencies of Payment	14.15	Not applicable
Corrupt and Fraudulent Practices	15.6	The following sentence shall apply: [For contracts financed by the Asian Development Bank] For the purposes of this Sub-Clause: ADB's Anticorruption Policy requires that Borrowers (including beneficiaries of ADB-financed activity), as well as Contractors, Subcontractors, manufacturers, and Consultants under ADB-financed contracts, observe the highest standard of ethics during the procurement and execution of such contracts. In pursuance of this policy, ADB: (a) defines, for the purposes of this provision, the terms set forth below as follows: (i) "corrupt practice" means the offering, giving, receiving, or soliciting, directly or indirectly, anything of value to influence improperly the actions of another party; (ii) "fraudulent practice" means any act or omission, including a misrepresentation, that knowingly or recklessly misleads, or attempts to mislead, a party to obtain a financial or other benefit or to avoid an obligation; (iii) "coercive practice" means impairing or harming, or threatening to impair or harm, directly or indirectly, any party or the property of the party to influence improperly the actions of a party; (iv) "collusive practice" means an arrangement between two or more parties designed to achieve an improper purpose, including influencing improperly the actions of another party; (v) "integrity violation" means any act, as defined under ADB's Integrity Principles and Guidelines, which violates ADB's Anticorruption Policy including corrupt, fraudulent, coercive, or collusive practice, abuse, and obstructive practice;

Conditions	Ref. GCC	Data
		(vi) "obstructive practice" means (a) deliberately destroying, falsifying, altering or concealing of evidence material to an ADB investigation; (b) making false statements to investigators in order to materially impede an ADB investigation; (c) failing to comply with requests to provide information, documents or records in connection with an OAI investigation; (d) threatening, harassing, or intimidating any party to prevent it from disclosing its knowledge of matters relevant to the investigation or from pursuing the investigation, or (e) materially impeding ADB's contractual rights of audit or access to information.
		(b) will reject a proposal for award if it determines that the Bidder recommended for award has, directly or through an agent, engaged in corrupt, fraudulent, collusive, coercive, or obstructive practices or other integrity violations in competing for the Contract; (c) will cancel the portion of the financing allocated to a contract if it determines at any time that representatives of the borrower or of a beneficiary of ADB-financing engaged in corrupt, fraudulent, collusive, coercive, or obstructive practices or other integrity violations during the procurement or the execution of that contract, without the borrower having taken timely and appropriate action satisfactory to ADB to remedy the situation; and (d) will sanction impose remedial actions on a firm or an individual, at any time, in accordance with ADB's Anticorruption Policy and Integrity Principles and Guidelines (both as amended from time to time), including declaring ineligible, either indefinitely or for a stated period of time, to participate in ADB-financed, or administered or supported activities or to benefit from an ADB-financed, administered or supported contract, financially or otherwise, if it at any time determines that the firm or individual has, directly or through an agent, engaged in corrupt, fraudulent, collusive, coercive, or obstructive practices or other integrity violations.
Maximum total liability of the Contractor to the Employer	17.6	The product of **one** times the Accepted Contract Amount.
Periods for submission of insurance: **a) evidence of insurance** **b) relevant policies**	18.1	14 days from the date of commencement 28 days from the date of commencement
Maximum amount of deductibles for insurance of the Employer's risks	18.2(d)	(a) for the Works, Plant and Materials - INR 10 lacs (b) for loss or damages to equipment - INR 10 lacs (c) for loss or damage to property (except the Works, Plant, Materials & Equipment) for Contract works - INR 10 lacs (d) for personal injury of death-(i) of the Contractor's employees (ii) of other people - INR 10 lacs
Minimum amount of third party insurance	18.3	Indian Rupees two million with no limit on the number of occurrence.
Date by which the DB shall be appointed	20.2	Within 28 days of commencement of work
The DB shall be comprised of	20.2	One Member
List of potential DB sole members	20.2	Mr. Satish Sagar (Ex Chief Engineer, HP PWD)

Conditions	Ref. GCC	Data
Appointment (if not agreed) to be made by	20.3	Appointing Authority: Chairperson of Institute of Engineers India, HP State Centre.
Place of arbitration	20.6	Shimla; Arbitration will be administered by Institution of Engineers (India)

Blank Page

Particular Conditions of Contract

Part B -Specific Provisions

Part B - Specific provisions, is to amend or for additions to the General Conditions of Contract (GCC-Section 7). Whenever there is a conflict, the provisions herein shall prevail over those in the GCC.

1. General Provisions

1.5 Priority of Documents

Replace the sub-clause with following:
The documents forming the Contract are to be taken as mutually explanatory of one another. For the purposes of interpretation, the priority of the documents shall be in accordance with the following sequence:

(a) the Contract Agreement,
(b) the Letter of Acceptance,
(c) the letter of price bid
(d) the letter of technical bid,
(e) the addendums if any
(f) the Particular Conditions of Contract – Part B,
(g) the Particular Conditions of Contract– Part A,
(h) the General Conditions of Contract,
(i) the Specifications,
(j) the Drawings, and
(k) the Schedules and any other documents forming part of the Contract.

If an ambiguity or discrepancy is found in the documents, the Engineer shall issue the necessary clarification or instruction with the approval of Employer"

1.6 Contract Agreement

Replace the phrase "The Contract Agreement shall be based upon the form annexed to the Particular Conditions" by the following;

"The Contract Agreement shall be based upon the form as given in Section 9, Contract Forms"

3. The Engineer

3.4 Replacement of the Engineer

Replace the duration of 21 days with 7 days in first line of the sub clause.

3.6 Management meetings

Insert this Sub-Clause at the end of Clause 3:

The Engineer or the Contractor's Representative may require the other to attend a management meeting in order to review the progress with reference to the agreed program and arrangements for future work. The Engineer shall record the business of management meetings and supply copies of the record to those attending the meeting and to the Employer. In the record, responsibilities for any actions to be taken shall be in accordance with the Contract.

4. The Contractor

4.2 Performance Security

Delete third paragraph and substitute:

The Contractor shall ensure that the Performance Security is valid and enforceable until the expiry of defect notification period. If the terms of the Performance Security specify its expiry date, and the Contractor has not become entitled to receive the Performance Certificate by 28 days prior to the expiry date, the Contractor shall extend the validity of the Performance Security.

4.7 Setting Out

The following sub-paragraphs are added to GCC Clause:

The Contract shall comply with (i) the measures and requirements set forth in the [resettlement plan] [indigenous people plan], to the extend it concerns impacts on affected people during constructions; and (ii) any corrective or preventive actions set out in safeguards monitoring reports that the Employer will prepare from time to time to monitor implementation of the [resettlement plan] [indigenous people plan].

4.12 Unforeseeable Physical Conditions

The following sub-paragraphs is added to the GCC Clause:

In addition to notice of any unforeseeable physical conditions, the Contractor shall provide the Engineer with a written notice of any unanticipated environmental, resettlement or indigenous peoples risks or impacts that arise during construction, implementation or operation of the Plant or Permanent Works, which were not considered in the environmental management plan [resettlement plan] [indigenous people plan].

4.16 Transport of Goods

The following sub-paragraph is added to GCC Clause:

The Contractor shall adequately record the conditions of roads, agriculture land and other infrastructure prior to the start of transporting materials, goods and equipment, and construction.

4.18 Protection of the Environment

Insert the following at the end of Sub-Clause 4.18:

The Contractor shall comply with all applicable National, provincial and local environmental laws and regulations. The Contractor shall:

(a) establish all operational system for managing environmental impacts,
(b) carry out all of the monitoring and mitigation measures set forth in the Environmental Management Plan (EMP) of the bidding document and
(c) allocate the budget required to ensure that such measures are carried out.

The Contractor shall submit [quarterly][semi-annual] reports on the carrying out of such measures to the Employer.

More particularly, the Contractor shall comply with (i) the measures and requirements set forth in the environmental management plan; and (ii) any corrective or preventive actions set out in safeguards monitoring reports that the Employer will prepare from time to time to monitor implementation of the environmental management plan.

4.21 Progress Reports

The following sub-paragraph is added to GCC Clause:

(i) monitoring of the obligations in sub-clauses 4.13, 4.18, 6.4, 6.7, 6.20 and 6.21.

6. Staff and Labour

6.4 Labour Laws

Insert the following para at the end of Sub-Clause 6.4:

The Contractor shall not make employment decisions based upon personal characteristics unrelated to job requirements. The Contractor shall base the employment relationship upon equal opportunity and fair treatment, and shall not discriminate with respect to aspects of the employment relationship, including recruitment and hiring, compensation (including wages and benefits), working conditions and terms of employment or retirement, and discipline.

The Contractor shall provide equal wages and benefits to men and women for work for equal value or type.

If any numerical employment targets for women are set for this project, add the following to the existing draft PCC clause:

The Contractor shall encourage the employment of women in construction.

6.7 Health and Safety

Insert the following para at the end of Sub-Clause 6.7:

The Contractor shall conduct health and safety programs for workers employed under the project, and shall include information on the risk of sexually transmitted diseases, including HIV/AIDS in such programs.

6.20 Prohibition of Forced or Compulsory Labour

The Contractor shall not employ “forced or compulsory labour” in any form. “Forced or compulsory labour” consists of all work or service, not voluntary performed that is extracted from an individual under threat or force or penalty.

6.21 Prohibition of Harmful Child Labour

Replace it with following para in Sub-Clause 6.21:

The Contractor shall not employ any child to perform any work, including work that is economically exploitative, or is likely to be hazardous to, or to interfere with, the child's education, or to be harmful to the child's health or physical, mental, spiritual, moral or social development. "Child" means a child below the statutory minimum age specified under applicable national, provincial or local law of India.

6.25 Social and Gender Safeguard Measures

Mandatory Social and Gender Safeguard Measures to be followed by the Contractor

The Contractor shall have the following provisions for all the staff working at site:

- Safe drinking water
- Separate toilet facilities for men and women with proper sewage disposal mechanism as applicable
- Crèche facility / and weaning facility to lactating mothers as mentioned in the standard labor law.
- Where the number of children is below the standard that of providing a crèche at site even then some alternative measures must be undertaken to provide a safe space to house the children under supervision.
- Provision for rest shelters/camps for the workers especially for women.
- Work place/temporary stay environment must be hygienic to prevent breeding of disease causing organisms/insects etc.
- Establishment of first aid medicine and equipment as per the nature and conditions of work.
- In case the employee's injury or death was due to the failure of the employer to comply with any law or to install and maintain safety devices or to take other precautions for the prevention of injury, said employer shall pay the State Insurance Fund a penalty of twenty-five percent (25%) of the lump sum equivalent of the income benefit payable by the System to the employee.

The contractor shall ensure at least 30% of women laborers are employed at project site.

11. Defects Liability

11.2 Cost of Remedying Defects

The following sub-paragraph is added to GCC Clause:

Upon the completion of construction, the Contractor, shall fully reinstate pathways, other local infrastructure, and agricultural land to at least their pre-protect condition as recorded by the Contractor in consonance with its obligations in Cluase 4.16.

12. Measurement and Evaluation

12.3 Evaluation

Replace the para 4 with following:

However, a new rate or price shall be appropriate for an item of work if following conditions are satisfied:

(a) (i) the measured quantity of the item is changed by more than 25% from the quantity of this item in the Bill of Quantities or other Schedule, and

(ii) this change in quantity multiplied by such specified rate for this item exceeds 1% of the Accepted Contract Amount,

(iii) this item is not specified in the Contract as a "fixed rate item";

or

(b) (i) the work is instructed under Clause 13 [Variations and Adjustments],

(ii) no rate or price is specified in the Contract for this item, and

(iii) no specified rate or price is appropriate because the item of work is not of similar character, or is not executed under similar conditions, as any item in the Contract.

13. Variations and Adiustments

13.8 Adjustment for changes in Cost

Replace the entire Sub-clause by:

In this Sub-Clause, "table of adjustment data" means the completed table of adjustment data for local currency included in Bidding Forms in Section 4. Adjustment data and source indices for local currency are provided by the Employer in schedules of section 4.

If this Sub-Clause applies, the amount payable to the Contractor shall be adjusted for rises or falls in the cost of Labour, Goods and other inputs to the Works. As a result of such adjustment the amount payable to the Contractor in the currency of payment for a particular period, shall be determined by the multiplication of the "Pn" determined by the formulae prescribed in this Sub-Clause with the estimated value of the works carried out in the period "n" in the relevant currency. To the extent that full compensation for any rise or fall in costs is not covered by the provision of this or other Clauses, the accepted Contract Amount shall be determined to have included amounts to cover the contingency of other rises and falls in costs.

No adjustment is to be applied to work valued on the basis of Cost or current prices. The formulae shall be of the following general type:

Pn = a + b (Ln/Lo) + c (Wn/Wo) + d (En/Eo) + e (Cn/Co) + f (Sn/So) + g (On/Oo)
where,

"Pn" is the adjustment multiplier to be applied to the estimated contract value in the currency of payment of the work carried out in period "n", this period shall be in month;

"a" is a fixed coefficient stated in the table of adjustment data, representing a non-adjustable contractual payments;

"b", "c", "d", "e", "f" and "g" are the fixed coefficients, stated in the table of adjustment data, representing the estimated proportion of "Labour", "Wood", "Electrical", "Cement", "Steel" and Other Materials" respectively for amounts to be paid in Domestic currency.

"Ln", "Wn", "En", "Cn", "Sn" and "On" are the current cost indices or reference price for period "n" expressed in the currency of payment, each of which is applicable to the tabulated cost element on 49 days prior to the last day of the period (to which the particular Payment Certificate relates); and

"Lo", "Wo", "Eo:, "Co", "So" and "Oo" are the base cost indices or reference price, expressed in the currency of payment, each of which is applicable to the tabulated cost element on the Base Date.

The cost indices or reference prices stated in the table of adjustment data shall be used.

Until such time as each current cost index is available, the Engineer shall determine a provisional index for the issue of Interim Payment Certificate. When a current cost index is available, the adjustment shall be recalculated accordingly.

If the Contractor fails to complete the Works within the Time for Completion, adjustment for prices thereafter shall be made using either (i) each index or price applicable on the date 49 days prior to the expiry of the Time for Completion of the Works, or (ii) the current index or price: whichever is more favorable to the Employer.

While making running payment for the work carried out by the contractor, cost of

work will be calculated based on BOQ unit rates as approved by the Employer. The adjustment in cost of work will be calculated separately. The difference in adjustment costs and costs of work already paid shall be paid once the adjustment in cost is calculated.

14. Contract Price and Payment

14.1 The Contract Price

Replace last sub-paragraph of clause with the following paragraph and add sub clause (e) as under:

"Contractor's Equipment including essential spare parts therefore, imported by the Contractor for the purpose of executing the Contract, which is not the part of permanent works, shall not be exempted from payments of import duties as applicable in the Country.

14.2 (a)

Replace the paragraph with the following:

The advance payment shall be repaid from each Interim payment starting from first payment @ 12.5% of the claim so that 100% amount is recovered by the time 80% payment for the works (excluding provisional sum) is made to the contractor. The advance payment security may be reduced in proportion to the value of the payment made and amount of advance recovered.

Section 9

Contract Forms (COF)

Blank Page

Section 9 - Contract Forms

This Section contains forms which, once completed, will form part of the Contract. The forms for Performance Security and Advance Payment Security, when required, shall only be completed by the successful Bidder after contract award.

Table of Forms

Letter of Acceptance **9-2**

Contract Agreement **9-3**

Performance Security **9-4**

Advance Payment Security **9-5**

Draft format for Excise/Custom duty exemption **9-6**

Letter of Acceptance

[on letterhead paper of the Employer]

. . . . . date. . . . . .

To: . . . . . *name and address of the Contractor* . . . . . .

Subject: . . . . . *Notification of Award Contract No.* . . . . . .

This is to notify you that your Bid dated . . . . *date.* . . . consisting of the Technical and Price Bids for execution of the . . . . . *.name of the contract and identification number, as given in the Bid Data Sheet* . . . . . for the Accepted Contract Amount of the equivalent of . . . . . *.amount in numbers and words and name of currency* . . . . . ., as corrected and modified in accordance with the Instructions to Bidders is hereby accepted by our Agency.

You are requested to furnish the Performance Security within 28 days in accordance with the Conditions of Contract, using for that purpose the Performance Security Form included in Section 9 (Contract Forms) of the Bidding Document.

[Choose one of the following statements:]

We accept that _____*[insert the name of Adjudicator proposed by the Bidder]* be appointed as the Adjudicator.

[or]

We do not accept that _____*[insert the name of the Adjudicator proposed by the Bidder]* be appointed as the Adjudicator, and by sending a copy of this Letter of Acceptance to _____*[insert name of the Appointing Authority]*, the Appointing Authority, we are hereby requesting such Authority to appoint the Adjudicator in accordance with GCC 29.1.

Authorized Signature: .....

Name and Title of Signatory: .....

Name of Agency: .....

Attachment: Contract Agreement

Contract Agreement

THIS AGREEMENT made the . . . . .day of . . . . . ., ..., between . . . . . *name of the Employer. . . . .* (hereinafter "the Employer"), of the one part, and . . . . . *name of the Contractor. . . .*(hereinafter "the Contractor"), of the other part:

WHEREAS the Employer desires that the Works known as . . . . . *name of the Contract. . . .* .should be executed by the Contractor, and has accepted a Bid by the Contractor for the execution and completion of these Works and the remedying of any defects therein,

The Employer and the Contractor agree as follows:

1. In this Agreement words and expressions shall have the same meanings as are respectively assigned to them in the Contract documents referred to.

2. The following documents shall be deemed to form and be read and construed as part of this Agreement. This Agreement shall prevail over all other Contract documents.

   (a) the Contract Agreement,

   (b) the Letter of Acceptance,

   (c) the Letters of Technical Bid and Price Bid,

   (d) the Particular Conditions of Contract,

   (e) the List of Eligible Countries that was specified in Section 5 of the bidding document,

   (f) the General Conditions of Contract,

   (g) the Specifications,

   (h) the Drawings,

   (i) the Completed Activity Schedules or Bill of Quantities, and

   (j) any other document listed in the **PCC** as forming part of the Contract.

3. In consideration of the payments to be made by the Employer to the Contractor as indicated in this Agreement, the Contractor hereby covenants with the Employer to execute the Works and to remedy defects therein in conformity in all respects with the provisions of the Contract.

4. The Employer hereby covenants to pay the Contractor in consideration of the execution and completion of the Works and the remedying of defects therein, the Contract Price or such other sum as may become payable under the provisions of the Contract at the times and in the manner prescribed by the Contract.

IN WITNESS whereof the parties hereto have caused this Agreement to be executed in accordance with the laws of . . . . . *name of the borrowing country. . . . .*on the day, month and year indicated above.

Signed by	Signed by .....
for and on behalf of the Employer in the presence of	for and on behalf the Contractor in the presence of
Witness, Name, Signature, Address, Date	Witness, Name, Signature, Address, Date

Performance Security

Bank's Name, and Address of Issuing Branch or Office

Beneficiary: .....*Name and Address of Employer*.....

Date: .....

Performance Guarantee No.: .....

We have been informed that . . . . . *name of the Contractor. . . . .* (hereinafter called "the Contractor") has entered into Contract No. . . . . *reference number of the Contract. . . . .* dated . . . . . .with you, for the execution of . . . . . *name of contract and brief description of Works. . . . .* (hereinafter called "the Contract").

Furthermore, we understand that, according to the conditions of the Contract, a performance guarantee is required.

At the request of the Contractor, we . . . . . *name of the Bank. . . . .* hereby irrevocably undertake to pay you any sum or sums not exceeding in total an amount of . . . . . *name of the currency and amount in figures*[1] *. . . . . .* (. . . . . *amount in words. . . . .*) such sum being payable in the types and proportions of currencies in which the Contract Price is payable, upon receipt by us of your first demand in writing accompanied by a written statement stating that the Contractor is in breach of its obligation(s) under the Contract, without your needing to prove or to show grounds for your demand or the sum specified therein.

This guarantee shall expire, no later than the . . . . . Day of . . . . . , ... [2], and any demand for payment under it must be received by us at this office on or before that date.

This guarantee is subject to the Uniform Rules for Demand Guarantees, ICC Publication No. 458[3], except that subparagraph (ii) of Sub-article 20(a) is hereby excluded.

. . . . . .
Seal of Bank and Signature(s)

- Note -

All italicized text is for guidance on how to prepare this demand guarantee and shall be deleted from the final document.

[1] The Guarantor shall insert an amount representing the percentage of the Contract Price specified in the Contract and denominated either in the currency(ies) of the Contract or a freely convertible currency acceptable to the Employer. If the bank issuing the performance security is located outside the country of the Employer, it shall have a correspondent financial institution located in the country of the Employer.

[2] Insert the date twenty-eight days after the expected completion date. The Employer should note that in the event of an extension of the time for completion of the Contract, the Employer would need to request an extension of this guarantee from the Guarantor. Such request must be in writing and must be made prior to the expiration date established in the guarantee. In preparing this guarantee, the Employer might consider adding the following text to the form, at the end of the penultimate paragraph: "The Guarantor agrees to a one-time extension of this guarantee for a period not to exceed [six months][one year], in response to the Employer's written request for such extension, such request to be presented to the Guarantor before the expiry of the guarantee."

[3] Or 758 as applicable

-- Note to Bidder --

If the institution issuing the performance security is located outside the country of the Employer, it shall have a correspondent financial institution located in the country of the Employer to make it enforceable.

Advance Payment Security

Bank's Name, and Address of Issuing Branch or Office

Beneficiary: ..... *Name and Address of Employer* .....

Date:.....

Advance Payment Guarantee No.:.....

We have been informed that . . . . . *name of the Contractor*. . . . . (hereinafter called "the Contractor") has entered into Contract No. . . . . *reference number of the Contract*. . . . . dated . . . . . .with you, for the execution of . . . . . *name of contract and brief description of Works*. . . . . (hereinafter called "the Contract").

Furthermore, we understand that, according to the Conditions of the Contract, an advance payment in the sum . . . . . *name of the currency and amount in figures*[1]. . . . . (. . . . . *amount in words*. . . . .) is to be made against an advance payment guarantee.

At the request of the Contractor, we . . . . . *name of the Bank*. . . . . hereby irrevocably undertake to pay you any sum or sums not exceeding in total an amount of . . . . . *name of the currency and amount in figures*[1]. . . . . (. . . . . *amount in words*. . . . .) upon receipt by us of your first demand in writing accompanied by a written statement stating that the Contractor is in breach of its obligation under the Contract because the Contractor used the advance payment for purposes other than the costs of mobilization in respect of the Works.

It is a condition for any claim and payment under this guarantee to be made that the advance payment referred to above must have been received by the Contractor on its account number . . . . . *Contractor's account number*. . . . . at . . . . . *name and address of the Bank*. . . . . .

The maximum amount of this guarantee shall be progressively reduced by the amount of the advance payment repaid by the Contractor as indicated in copies of interim statements or payment certificates which shall be presented to us. This guarantee shall expire, at the latest, upon our receipt of a copy of the interim payment certificate indicating that eighty percent (80%) of the Contract Price has been certified for payment, or on the . . day of . . . . . ., . . .[2], whichever is earlier. Consequently, any demand for payment under this guarantee must be received by us at this office on or before that date.

This guarantee is subject to the Uniform Rules for Demand Guarantees, ICC Publication No. 458[3].

. . . . . .

Seal of Bank and Signature(s)

- Note -

All italicized text is for guidance on how to prepare this demand guarantee and shall be deleted from the final document.

[1] The Guarantor shall insert an amount representing the amount of the advance payment denominated either in the currency(ies) of the advance payment as specified in the Contract, or in a freely convertible currency acceptable to the Employer.

[2] Insert the expected expiration date of the Time for Completion. The Employer should note that in the event of an extension of the time for completion of the Contract, the Employer would need to request an extension of this guarantee from the Guarantor. Such request must be in writing and must be made prior to the expiration date established in the guarantee. In preparing this guarantee, the Employer might consider adding the following text to the form, at the end of the penultimate paragraph: "The Guarantor agrees to a one-time extension of this guarantee for a period not to exceed [six months][one year], in response to the Employer's written request for such extension, such request to be presented to the Guarantor before the expiry of the guarantee.

[3] Or 758 as applicable.

-- Note to Bidder --

If the institution issuing the advance payment security is located outside the country of the Employer, it shall have a correspondent financial institution located in the country of the Employer to make it enforceable.

Draft format for Excise/Custom duty exemption

TO WHOMSOEVER IT MAY CONCERN

ESSENTIALITY CERTIFICATE

This is to certify that the work for _____ (Package No. & Name of work) _____ has been awarded to M/s _____ (Name of Contractor) _____amounting to Rs._____(Amount of Contract Agreement) _____only by the Employer [*Name of Employer*] and that this project has duly been approved by Government of India.

The Project is funded by Asian Development Bank under loan agreement No.------IND between India and Asian Development and being implemented by the Himachal Pradesh Tourism Development Board, State of Himachal Pradesh.

It is certified that M/S_____ (Name of Contractor) _____ for the above project requires to purchase _____ (Quantity of Material and name of material) _____under work _____ (Package No. & Name of work) _____.

It is further certified that the aforesaid material is required for the execution of the said project.

The validity of this certificate is from _____ to _____.

The Project Director,
Himachal Pradesh Tourism Development Board.
Himachal Pradesh

Countersigned

Secretary, Tourism
Government of Himachal Pradesh

Countersigned

Secretary, Finance
Government of Himachal Pradesh

Himachal Pradesh Tourism Development Board

Department of Tourism and Civil Aviation, Government of Himachal Pradesh

Infrastructure Development Investment Program for Tourism (Project 3)

ADB Loan No. 3223–IND

BIDDING DOCUMENT
for

Procurement of

the Work of

Creation of Tourist Cultural Centre, Janjehli, District Mandi

(Following ADB's Single Stage - Two Envelope Bidding Procedure)

Volume 2-Price Bid

Issued on : **16/04/2018**
Invitation for Bids No. : IDIPT-HP/P3/NCB/2018-19/01
Package No. : **HPTDB/15/2**

Employer : **Himachal Pradesh Tourism Development Board (HPTDB)**
Represented by:
The Project Director
Infrastructure Development Investment Program for Tourism
State of Himachal Pradesh
Himachal Pradesh Tourism Development Board (HPTDB)

Country : **INDIA**

Blank Page

Section 4B - Bidding Forms

- Post qualification -

Table of Forms

Letter of Price Bid **4B-3**

Bill of Quantities **4B-5**

Blank Page

Letter of Price Bid

Date: dd-mm-yyyy

Invitation for Bid No.: IDIPT-HP/P3/NCB/2018-19/01

NCB No.: HPTDB/15/2

To:
The Project Director,
Infrastructure Development Investment Program for Tourism, Himachal Pradesh (IDIPT-HP)
Himachal Pradesh Tourism Development Board (HPTDB),
First Floor, U.S. Club
Shimla – 171 001, HP, India

We, the undersigned, declare that:

(a) We have examined and have no reservations to the Bidding Documents, including Addenda issued in accordance with Instructions to Bidders (ITB) 8;

(b) We offer to execute in conformity with the Bidding Documents the following Works:
……

(c) The total price of our Bid, excluding any discounts offered in item (d) below is:

(d) The discounts offered and the methodology for their application are:

(e) Our Bid shall be valid for a period of . . . . . days from the date fixed for the bid submission deadline in accordance with the Bidding Documents, and it shall remain binding upon us and may be accepted at any time before the expiration of that period;

(f) If our Bid is accepted, we commit to obtain a performance security in accordance with the Bidding Documents;

(g) We have paid, or will pay the following commissions, gratuities, or fees with respect to the bidding process or execution of the Contract: **

Name of Recipient	Address	Reason	Amount
.....	.....	.....	.....
.....	.....	.....	.....

(h) We understand that this bid, together with your written acceptance thereof included in your notification of award, shall constitute a binding contract between us, until a formal contract is prepared and executed; and

(i) We understand that you are not bound to accept the lowest evaluated bid or any other bid that you may receive.

(j) We agree to permit ADB or its representative to inspect our accounts and records and other documents relating to the bid submission and to have them audited by auditors appointed by the Bank.

Name .....

In the capacity of .....

Signed .....

.....

Duly authorized to sign the Bid for and on behalf of .....

Date .....

.....

***** If none has been paid or is to be paid, indicate "none"***

Bill of Quantities

Preamble to Bill of Quantities

1. The Bill of Quantities shall be read in conjunction with the Instructions to Bidders, General and Particular Conditions of Contract, Technical Specifications, and Drawings.
2. The quantities given in the Bill of Quantities are estimated and provisional, and are given to provide a common basis for bidding. The basis of payment will be the actual quantities of work ordered and carried out, as measured and verified by the Engineer and valued at the rates and prices bid in the priced Bill of Quantities, where applicable, and otherwise at such rates and prices as the Engineer may fix within the terms of the Contract.
3. The rates and prices bid in the priced Bill of Quantities shall, except as otherwise provided under the Contract, include all required construction equipment, labor, supervision, materials, erection, maintenance, insurance, profit, taxes, and duties, together with all general risks, liabilities, and obligations set out or implied in the Contract.
4. A rate or price shall be entered against each item in the priced Bill of Quantities. The cost of Items against which the Contractor has failed to enter a rate or price shall be deemed to be covered by other rates and prices entered in the Bill of Quantities.
5. The whole cost of complying with the provisions of the Contract shall be included in the Items provided in the priced Bill of Quantities, and where no Items are provided, the cost shall be deemed to be distributed among the rates and prices entered for the related Items of Work.
6. General directions and descriptions of work and materials are not necessarily repeated nor summarized in the Bill of Quantities. References to the relevant sections of the Contract documentation shall be made before entering prices against each item in the priced Bill of Quantities.
7. Provisional Sums included and so designated in the Bill of Quantities shall be expended in whole or in part at the direction and discretion of the Engineer in accordance with the Conditions of Contract. It will be used by the Engineer for nominated sub-contractors, line agencies, third party inspecting agencies, charges levied by statutory electrical, telephone, or other authorities, or for other miscellaneous works. The use of provisional sum will also be for relocation of utilities above or under the ground that conflict with the existing or permanent line or level or the works; Independent sampling and laboratory testing, as directed by the Engineer; Replacement or compensation for plants and trees removed due to the works; Permanent reinstatement of asphalt roads etc. as directed by the Engineer.
8. The method of measurement of completed work for payment shall be in accordance with the relevant codes.
9. Rock is defined as all materials that, in the opinion of the Engineer, require blasting, or the use of metal wedges and sledgehammers, or the use of compressed air drilling for their removal etc.
10. The Bill of Quantities for the Works is to be read for the purpose of pricing, in conjunction with all other sections of the bid document. The prices quoted for various items in the Bill of Quantities shall be the all inclusive values of works described therein, including all costs, taxes, expenses and royalties, lift and lead charges which may be required in and for the execution of Works and remedying of any defects, together with all risks, liabilities and obligations set forth or implied in this bid document. The unit prices quoted shall apply only to the quantities actually executed.
11. Cost of temporary works like, Construction and maintenance of temporary dewatering and drainage arrangements, establishment and maintenance of contractor's office, store, establishment and maintenance of workshops, plant and equipment, maintenance of Engineers site Implementation of EMP including Project sign boards etc will be part of work and shall not be paid extra.
12. The Contractor's price shall be deemed to be inclusive of all costs of supply, delivery, off loading, erection completion installation, testing and commissioning.
13. Arithmetic errors will be corrected by the Employer as follows:
    a) if there is a discrepancy between the unit price and the total price that is obtained by multiplying the unit price and quantity, the unit price shall prevail and the total price shall be corrected, unless in the opinion of the Employer there is an obvious misplacement of

the decimal point in the unit price, in which case the total price as quoted shall govern and the unit price shall be corrected;

b) if there is an error in a total corresponding to the addition or subtraction of subtotals, the subtotals shall prevail and the total shall be corrected;

c) if there is a discrepancy between the bid price in the Summary of Bill of Quantities and the bid amount in item (c) of the Letter of Bid, the bid price in the Summary of Bill of Quantities will prevail and the bid amount in item (c) of the Letter of Bid will be corrected; and

d) If there is a discrepancy between words and figures, the amount in words shall prevail, unless the amount expressed in words is related to an arithmetic error, in which case the amount in figures shall prevail subject to (a), (b) and (c) above.

GENERAL ABSTRACT OF COST

Name of Work:- **Creation of Tourist Cultural Centre, Janjehli, District Mandi**

Annexure	Sub-Head of Works	Amount (INR)	
		In Figures	In Words
A	Civil Works		
B	Water Supply and Saitary Installation		
C	Electrical Installation		
D	Total (A+B+C)		
E	Provisional Sum	12,00,000.00	Rupees Twelve Lakhs only
F	Grand Total (D+E)		

Blank Page

Bill of Quantities

Name of the work: - Creation of Tourist Cultural Centre, Janjehli, District Mandi

Annexure - A

Sl. No.	Description of Item	Unit	Quantity	Unit Rate (INR)		Amount (INR)
				In Figures	In Words	
A	**Civil Works**					
A1	**Janjehli Tourist Cultural Centre**					
1	Cutting work in earth work in all kind of soils i.e. spade work, pick work, jumper work , soft rock, Hard rock work upto all heights and depth and disoposal of excavated earth upto all leads and lifts and designated dumping site or as directed by the Engineer incharge (No extra will be paid)	Cum	2,274.91			
2	Excavation in foundation trenches etc. in earth work up to all lift, bailing out water through pump (if required), stacking the excavated soil not more than 3.00 meter clear from edge of the excavation as directed by the Engineer in Charge, then returning the stacked soil in 15cm layers when required into the plinth sides of foundation etc., including all kind of soil, consolidating each deposited layer by ramming and watering and then disposing off all surplus excavated earth at designated dumping site by manual /mechanical means, in all lead and lift.	Cum	5,496.12			
3	Excavation in earth work and filling in 15 cm. layers in foundation and plinths including ramming, watering and consolidating up to all lead and lift including carriage of materials up to all lead and lift and as per direction of Engineer in charge.	Cum	637.40			
4	Felling trees of the girth (measured at a height of 1 metre above ground level) including cuttng of trunks and branches removing the roots and stacking of serviceable material and disposal of unserviceable materials including all leads and lifts. Above 240cm girth	Each	10.00			
5	Filling in plinth with sand under floors including watering, ramming, consolidating and dressing complete including carriage of material in all lead and lift as per direction of Engineer-in-charge.	Cum	120.47			

Annexure - A

Sl. No.	Description of Item	Unit	Quantity	Unit Rate (INR)		Amount (INR)
				In Figures	In Words	
A	**Civil Works**					
6	Providing form work with steel plates 3.15mm.thick welded with angle iron in frame 30x30x5mm. so as to give a fair finish including centering, shuttering, strutting and propping etc. with wooden battens and ballies, height of propping and centering in all heights floor to ceiling and removal of the same for in situ-reinforced in all lead and lift.					
a)	Foundations, footings, bases of columns and mass concrete.	Sqm	1,705.72			
b)	Flat Surfaces such as soffit of suspended floor , roofs landings and the like floor etc. up to 200 mm in thickness.	Sqm	3,101.39			
c)	Vertical Surfaces such as walls (any thickness) parrtitions and the like including atached pilasters butteressplinth and string cources and the like.	Sqm	1,070.34			
d)	Columns / pillars, posts and struts square, rectangular or polygonal in plan	Sqm	1,480.79			
e)	Beams, cantilevers, gurders / lintels sides and soffits of beams beam hounchings cantilivers, bressumers and lintels not exceeding 1.00 m in depth in all height in floor.	Sqm	6,070.40			
f)	Edges of slab and breaks in floor etc.under 20 cm wide.	Rmt	1,121.45			
g)	Stair cases with sloping or stepped soffits excluding landing.	Sqm	307.45			
7	Providing and laying cement concrete 1:4:8 (1 cement:4 sand:8 graded stone aggregate 40mm nominal size) in foundation and plinth and curing complete, excluding cost of form work and including carriage of material in all lead and lift as per the direction of Engineer-in-charge.	Cum	788.65			

Annexure - A

Sl. No.	Description of Item	Unit	Quantity	Unit Rate (INR)		Amount (INR)
				In Figures	In Words	
A	**Civil Works**					
8	Construction of dry lean cement concrete Sub- base over a prepared sub-grade with coarse and fine aggregate conforming to IS: 383, the size of coarse aggregate not exceeding 25 mm, aggregate cement ratio not to exceed 15:1, aggregate gradation after blending to be as per table 600-1, cement content not to be less than 150 kg/ cum, optimum moisture content to be determined during trial length construction, concrete strength not to be less than 10 Mpa at 7 days, mixed in a batching plant, transported to site, laid with a paver with electronic sensor, compacting with 8-10 tonnes vibratory roller, finishing and curing, including carriage of material in all lead and lift as per direction of Engineer-in-charge.	Cum	51.26			
9	Providing and laying cement concrete 1:2:4 (1 cement:2 Sand:4 graded stone aggregate 20mmnominal size) and curing complete excluding cost of form work and including carriage of material in all lead and lift as per the direction of Engineer-in-charge.					
a)	Foundations, footings bases of columns and the like and mass concrete.	Cum	53.37			
b)	Walls including attached buttresses, pilasters and their caps and basis and string courses etc. up to floor two level.	Cum	119.29			
10	Providing and laying CC flooring 1:2:4 (1cement:2 sand:4 stone aggregate) 20mm nominal size)laid in one layer finished with a floating coat of neat cement including carriage of material in all lead and lifts. 40mm thick	sqm	106.80			
11	Providing and fixing glass strips in joints of cement flooring 40 X4mm	Rmt	239.75			
12	Providing and laying damp proof course 38mm thick with cement concrete 1:2:4 (1 cement:2 sand:4 stone aggregate 12.5mm	Sqm	20.00			

Annexure - A

Sl. No.	Description of Item	Unit	Quantity	Unit Rate (INR)		Amount (INR)
				In Figures	In Words	
A	**Civil Works**					
	nominal size) and curing complete including carriage of material upto all leads and lifts and as per direction of Engineer incharge					
13	P/L cement concrete work 1:1.5:3(1 cement : 1.5sand : 3 graded stone aggregate 20mm nominal size) including mechanically mixing and vibrating (M-20 Grade) excluding the cost of form work ,including carriage of material in all lead and lifts					
a)	Foundations, footings bases of columns and the like and mass concrete.	Cum	7.66			
b)	Lintels, beams girders bressumers and cantilevers up to floor two level :	Cum	132.35			
c)	Suspended Floor roofs, landing and shelves and their support balconies, beams, girders, bressumers and cantilever up to all levels.	Cum	3.00			
d)	Walls including attached buttersses,pilasters and their caps and bases and string courses etc. upto floor two level:	Cum	30.00			
14	Providing and laying reinforced cement concrete in sub structure complete as per drawings and technical specifications claused 802, 803, 1202 and 1203 RCC grade M-25,complete, excluding cost of form work and including carriage of material in all lead and lift as per the direction of Engineer-in-charge.	Cum	260.83			
15	Providing and laying reinforeced cement concrete machanically mixed and vibreted course M30 grade including centring, shuttering etc complete as per drawing and technical specifications clause 800, 1206.3 complete, excluding cost of form work and including carriage of material in all lead and lift as per the direction of Engineer-in-charge.Walls including attached buttersses,pilasters and their caps and bases and string courses etc. upto floor two level:	Cum	5.85			

Annexure - A

Sl. No.	Description of Item	Unit	Quantity	Unit Rate (INR)		Amount (INR)
				In Figures	In Words	
A	**Civil Works**					
16	Providing and laying reinforeced cement concrete machanically mixed and vibreted course M30 grade in superstructure including centering, shuttering etc complete as per drawing and technical specifications clause 800, 1205, 1205.5 including excluding cost of form work and including carriage of material in all lead and lift as per the direction of Engineer-in-charge. Suspended Floor roofs, landing and shelves and their support balconies, beams, girders, bressumers and cantilever up to all levels.	Cum	64.80			
17	Providing 6mm thick pre-moulded bitumineous pads on abiutmtnt cap and dirt walls including carriage of material upto all leads and lifts and as per direction of Engineer incharge.	Sqm	19.50			
18	Providing and laying **RCC M-25** mix design and curing complete excluding cost of form work and reinforcement for reinforcement concrete work and curing complete excluding cost of form work and reinforcement, including carriage of material in all lead, lift, height and floor level as per direction of Engineer In charge.					
a)	Foundations, footings bases of columns and the like and mass concrete.	Cum	395.33			
b)	Column, pillars, posts and struts up to all levels.	Cum	168.82			
c)	Suspended Floor roofs, landing and shelves and their support balconies, beams, girders, bressumers and cantilever up to all levels.	Cum	518.70			
d)	Walls including attached buttersses,pilasters and their caps and bases and string courses etc. upto floor two level:	Cum	88.76			
e)	Stair cases (except spiral stair cases) excluding landing but including preparing of the surface and finishing of nosing upto floor two level.	Cum	26.80			

Annexure - A

Sl. No.	Description of Item	Unit	Quantity	Unit Rate (INR)		Amount (INR)
				In Figures	In Words	
A	**Civil Works**					
19	Providing and laying RCC 1:1.5:3 and curing complete excluding cost of form work and reinforcement for reinforcement concrete work and curing complete excluding cost of form work and reinforcement, including carriage of material in all lead, lift, height and floor level as per direction of Engineer In charge.					
a)	Vertical Surfaces such as walls (any thickness) parrtitions and the like including atached pilasters butteressplinth and string cources and the like.	Cum	13.63			
b)	Suspended Floor roofs, landing and shelves and and their support balconies, beams girders, bressumers and cantilever up to all floor levels	Cum	5.77			
20	Providing Mild Steel/Tor steel reinforcement for RCC work including bending, binding and placing in position complete up to floor two level and above including cost of binding wire and carriage of material in all lead and lift and as per the direction of Engineer-in-charge Tata, Jindal or equivalent	Kg	1,55,451.02			
21	Brick work using common burnt clay building bricks in foundation and plinth in Cement Mortar 1:4 (1 cement:4 sand), curing complete, including carriage of material in all lead and lift as per the direction of Engineer-in-charge. Second Class Bricks	Cum	65.85			
22	Brick work using common burnt clay building bricks including carriage & all leads and lifts Super-structure above plinth level upto floor two level, Cement Mortar 1:4 (1 cement:4 sand), curing complete, including carriage of material in all lead and lift as per the direction of Engineer-in-charge.Second Class Bricks	Cum	714.41			
23	Half brick masonry in common burnt clay building bricks in 1:3 (1 cement: 3 sand) using second class bricks in foundation and plinth, curing complete, including carriage of material in all lead	sqm	5.00			

Annexure - A

Sl. No.	Description of Item	Unit	Quantity	Unit Rate (INR)		Amount (INR)
				In Figures	In Words	
A	**Civil Works**					
	and lift as per the direction of Engineer-in-charge. Second Class Bricks					
24	Half brick masonry in common burnt clay building bricks in in super-structure above plinth level upto floor two level in Cement Mortar 1:4 (1 cement : 4 sand) curing complete, including carriage of material in all lead and lift as per the direction of Engineer-in-charge. Second Class Bricks	Sqm	1,944.42			
25	Random rubble masonry/polygonal rubble masonry (uncoursed/brought to courses) with hard stones of approved quality in foundation and plinth including leveling up with cement concrete 1:6:12 (1 cement :6 sand : 12 graded stone aggregate 20mm nominal size) at plinth level in cement Mortar 1:6 (1 cement:6 sand) including all leads and lifts.	Cum	4,617.87			
26	S.R. masonary coursed with hard stone of approved quality in foundation and plinth including racking out joint, in cement morter 1:5 (1 Cement : 5 Sand) including raking out joints, curing complete including carriage of material in all lead and lift as per the direction of Engineer-in-charge.	Cum	51.10			
27	Square rubble masonry coursed with hard stone of approved quality in foundation and plinth in Retaining walls/Breast walls including raking out joints, in Cement Mortar 1:6 (1 Cement:6Sand), including raking out joints, curing complete including carriage of material in all lead and lift as per the direction of Engineer-in-charge.	Cum	340.83			
28	Dressing of stone (for face work) - Fine chisel dressing (3 line dressing) all complete.	Sqm	1,368.50			
29	Providing and fixing Local Stone pavers /cobbles of 100x100mm or 200x100mm or similar sizes, in required pattern as per drawing & design or as approved, including carriage of material up to all lead and lift and as per direction of Engineer in charge.	Sqm	1,946.86			

Annexure - A

Sl. No.	Description of Item	Unit	Quantity	Unit Rate (INR)		Amount (INR)
				In Figures	In Words	
A	**Civil Works**					
30	Random rubble dry stone Kharanja (soling) under floor including supply of material, carriage of material up to all lead and lift and as per direction of Engineer in charge.	Cum	259.82			
31	Stone soling under floor hand packed including watering, spreading etc. complete including supply of material, carriage of material up to all lead and lift and as per direction of Engineer in charge.	Cum	22.40			
32	Stone /Boulder filling under floor dry hand packed including supply of material, carriage of material up to all lead and lift and as per direction of Engineer in charge.	Cum	0.12			
33	Stone filling behind retaining wall, including supply of material, carriage of material up to all lead and lift and as per direction of Engineer in charge.	Cum	927.38			
34	Stone work plain in coping plinth cornices, string courses and plinth courses in cement mortar 1:6 (1 cement : 6 sand) including pointing with cement mortar 1:2 (1 cement : 2 sand), including supply of material, carriage of material up to all lead and lift and as per direction of Engineer in charge.	Cum	5.40			
35	Stone work for wall lining etc.(Veneer work) 40mm thick, in cement mortar 1:3 (1 cement : 3 sand) including pointing in white cement mortar 1:2 (1 white cement : 2 stone dust) with an admixture of pigment including supply of material, carriage of material up to all lead and lift and as per direction of Engineer in charge. matching the stone shade :	Sqm	1,896.99			

Annexure - A

Sl. No.	Description of Item	Unit	Quantity	Unit Rate (INR)		Amount (INR)
				In Figures	In Words	
A	**Civil Works**					
36	Providing and fixing Uni stone (colour as per direction of Engineer incharge) cladding 12mm thick as on face of arch masonry walls etc. on 12mm thick cement plaste3 1:3 (1 cement: 3 sand) jointed with cement slurry including scaffolding etc. complete including supply and carriage of material up to all lead and lift and as per direction of Engineer in charge.	Sqm	220.38			
37	Providing & Fixing of Accoustic Wooden Wall Panelling using 1.0mm thick GI grid of 100X65mm @1200mm X600mm C/C (Max) and finished with 25mm woodwool covered with fine jute cloth and fixed with adhesive. Cavity of wall and pannel will be filled by glasswool joint of front pannels sealed with T section steal Matt finished strip, including carriage of material up to all lead and lift and as per direction of Engineer in charge.	Sqm	192.22			
38	Providing & Fixing of Accoustic Perforated Wall pannelling starting from ground level of Seminar hall till 1200mm Ht. using 1.0mm thick GI grid of 150X65mm @1200mm X600mm C/C (Max) and finished with Shera wood strips fixed with screw in Horizontal pattern, Shera wood will be complete polish finished as per drawings and design, including supply and carriage of material up to all lead and lift and as per direction of Engineer in charge.	Sqm	66.72			
39	P/F Drainage Spouts as per drawing and technical specifications clause 1209 including carriage of material upto all leads and lifts and as per direction of Engineer incharge.	Each	8.00			
40	Providing Second Class Deodar wood frames of doors, windows, clerestory, windows and other frames wrought, framed and fixed in position including carriage of material upto all leads and lifts and as per direction of Engineer incharge.	Cum	17.71			

Annexure - A

Sl. No.	Description of Item	Unit	Quantity	Unit Rate (INR)		Amount (INR)
				In Figures	In Words	
A	**Civil Works**					
41	Providing and fixing 40mm thick panelled glazed or paneled & glazed shutter (5.5 mm thick standard quality glass will be used) for door windows and clerestory window including black enameled Brass butt hinges with necessary screws etc. complete, including carriage of material upto all leads and lifts and as per direction of Engineer incharge. 2nd class deodar wood	Sqm	660.49			
42	Providing and fixing 40mm thick wire gauge shutters using galvanised M.S. wire gauge of I.S. gauge designation 85g. With wire of dia 0.56mm for doors, windows and clerestory windows including bright finished black enamelled iron hinges with necessary screws. 2nd class deodar wood	Sqm	660.49			
43	Extra for providing and fixing galvanised M.S. wire gauge of I.S. gauge designation no. 140 g to doors, window and clerestory windows with I.S. gauge designation no. 85 G with wire of dia 0.56 mm including carriage of material upto all leads and lifts and as per direction of Engineer incharge.	Sqm	660.49			
44	Providing and fixinfg flush door shutter interior grade commercial type , core of black- board construction with frame of first class hard wood and prelaminated board commercial veneering with vertical grains of cross bands and face veneer on both faces of shutter. including carriage of material in all lead and lifts					
a)	40mm thick incluidng black enamalled M.S. Butt hinges	Sqm	9.45			
b)	35mm thick incluidng black enamalled M.S. Butt hinges	Sqm	25.00			
45	Providing and fixing angle iron door, window, clerestory window frame section of 40X40X6 mm, thickness including hinges jamb, lock jamb, beed and if required angle thrashold of mild steel angle 50 X25mm welded or rigidly fixed by mechancial means, lugs with split end tail to each jamb including steel butt hinges 2.5 mm thick with provision for locaking arangement and shock absorber as specified and applying a coat of approved steel	Rmt.	26.00			

Annexure - A

Sl. No.	Description of Item	Unit	Quantity	Unit Rate (INR)		Amount (INR)
				In Figures	In Words	
A	**Civil Works**					
	primer after pre-tretement of the suface, including carriage of material upto all leads and lifts and as per direction of Engineer incharge.					
46	30mm thick fibreglass reinforced plastic (F.R.P.) flush door shutter in different plain and wood finish made with fire retardant grade unsaturated polyester resin, moulded to 3mm thick FRP laminate all around, with suitable wooden blocks inside at required places for fixing of fittings and polyurethane foam (PUF) / Polystyrene foam to be used as filler material throughout the hollow panel, casted monolithically with testing parameters of F.R.P. laminate conforming to table - 3 of IS: 14856 : 2000, including carriage of material upto all leads and lifts and as per direction of Engineer incharge.	Sqm	37.80			
47	Providing and fixing of Fibre Glass Reinforced plastic (FRP) Door Frames of three legged of cross-section 90mm x 45mm having single rebate of 32mm x 15mm to receive shutter of 30mm thickness .The laminate doorframe moulded with fire resistant grade unsaturated polyester resin and chopped mat .Doorframe laminate shall be 2mm thick and shall be filled with suitable wooden block in all the three legs. The frame shall be covered with fibreglass from all sides. MS stat shall be provided at the bottom to sturdy the frame including carriage of material upto all leads and lift and as per direction of Enigneer incharge.	Rmt	110.40			
48	Providing and fixing bright finished brass Sliding door-bolts with nuts and screws etc. to match with existing fittings, complete including carriage of material in all lead and lift as per the direction of Engineer-in-charge (Make Flora or equivalent or as approved)					
a	300x15 mm	Each	28.00			
b	200x15 mm	Each	71.00			

Annexure - A

Sl. No.	Description of Item	Unit	Quantity	Unit Rate (INR)		Amount (INR)
				In Figures	In Words	
A	**Civil Works**					
49	Providing and fixing bright finished brass 200x80x150mm size GODREJ classic Cylindrical lock Cat No 5328 or equivalent, handles with necessary screws etc. complete (indian make of approved quality), including carriage of material upto all leads and lifts and as per direction of Engineer incharge.	Each	32.00			
50	Providing and fixing 100mm bright finished brass floor Door Stopper with rubber cushion screws etc to suit shutter thickness, complete including carriage of material in all lead and lift as per the direction of Engineer-in-charge. (Make Flora or equivalent or as approved)	Each	132.00			
51	Providing and fixing Bright finished Brass Handles with screws etc. to match with existing fittings, complete including carriage of material in all lead and lift as per the direction of Engineer-in-charge. (Make Flora or equivalent or as approved)					
a	150mm	Each	182.00			
b	125mm	Each	299.00			
c	100mm	Each	174.00			
52	Providing fixing bright finished brass tower bolts (barrel type) with screws etc. to match with existing fittings, complete including carriage of material in all lead and lift as per the direction of Engineer-in-charge. (Make Flora or equivalent or as approved)					
a	250x10 mm	Each	72.00			
b	200x10 mm	Each	101.00			
c	150x10 mm	Each	224.00			
d	100x10 mm	Each	58.00			

Annexure - A

Sl. No.	Description of Item	Unit	Quantity	Unit Rate (INR)		Amount (INR)
				In Figures	In Words	
A	**Civil Works**					
53	Providing and fixing M.S.round holding down or anchor bolts with nuts and washer plates complete, including carriage of material upto all leads and lifts and as per direction of Engineer incharge.	Qtl.	0.38			
54	Providing and fixing bright finished brass hard drawn hooks and eyes, including carriage of material upto all leads and lifts and as per direction of Engineer incharge. 150mm	Each	178.00			
55	Providing and fixing Godrej C071 Aluminum Alloy Door Closer or equivalent containing 1-Piece Door Closer Body, 1-Piece Arm, 1-Piece Screw Packet, 1-Piece Instruction Manual, able to mount in left/right, inside/outside door, including carriage of material upto all leads and lifts and as per direction of Engineer incharge.	Each	110.00			
56	Providing and fixing bison board in ceiling ISI mark of approved quality with butt jointed and nails bison board 8mm thick, including carriage of material upto all leads and lifts and as per direction of Engineer incharge.	Sqm	423.45			
57	Providing and fixing plain square edged cover fillets (beading) 50mmx12mm section, with wood screws in ceiling and lining including mitring at junction including carriage of material upto all leads and lifts and as per direction of Engineer incharge. 1st class deodar wood.	Rmt.	1,359.62			
58	Providing and fixing plain square edged cover fillets (beading) 40mmx12mm section with wood screws in ceiling and lining including mitring at junctions including carriage of material upto all leads and lifts and as per direction of Engineer incharge. 1st class deodar wood.	Rmt.	417.68			
59	Providing and fixing plain lining in column cladding, skirting, dado, risers and treads of steps etc with tongued and grooved	Sqm	279.85			

Annexure - A

Sl. No.	Description of Item	Unit	Quantity	Unit Rate (INR)		Amount (INR)
				In Figures	In Words	
A	**Civil Works**					
	jointing and srews, (frame work and cover fillets to be measured and paid for separately), including carriage of material upto all leads and lifts and as per direction of Engineer incharge. 20 mm thick - 2nd class deodar wood					
60	Providing eaves board 200mmx25mm thick including fixing and making moulded corners as per existing pattern and drawings in position and as including carriage of material upto all leads and lifts and as per direction of Engineer incharge.2nd class deodar wood.	Rmt.	653.73			
61	Providing and fixing 75X60mm moulded Hand Rails in straight length complete including carriage of material in all lead and lift as per the direction of Engineer-in-charge. 2nd class deodar wood.	Rmt	467.84			
62	Providing and fixing 50mm + 50mm balusters 50mmx50mm square wrought fixed with ends housed (square or splay) to hand rails and treads or strings complete as per drawing and design complete including carriage of material in all lead and lift as per the direction of Engineer-in-charge. 2nd class deodar wood.	Rmt	1,052.64			
63	Providing wood work in frames of false ceiling partitions etc. Sawn and put-up in position including carriage of material in all lead and lift as per the direction of Engineer-in-charge 2nd class Kail wood	Cum	90.92			
64	Providing and fixing 20mm thick wooden plank ceiling with planks over lapping each other and jointed with wood screws (frame work and cover fillets to be measured and paid for separately), including carriage of material in all lead and lift as per the direction of Engineer-in-charge. 2nd class Deodar wood	Sqm	2,406.59			

Annexure - A

Sl. No.	Description of Item	Unit	Quantity	Unit Rate (INR)		Amount (INR)
				In Figures	In Words	
A	**Civil Works**					
65	Providing and fixing 40mm thick wooden plank ceiling with planks below slates over lapping each other and jointed with wood screws (frame work and cover fillets to be measured and paid for separately), including carriage of material in all lead and lift as per the direction of Engineer-in-charge. 2nd class Deodar wood	Sqm	2,307.03			
66	Providing and fixing 25 mm wooden planking tongued and grooved, in flooring fixing to wooden base frame with iron screws complete (base wooden frame to be paid separately) including carriage of material in all lead and lift as per the direction of Engineer-in-charge. 2nd class deodar wood.	Sqm	7.28			
67	Providing and fixing 20mm thick plain lining with tongued and grooved jointing and srews(frame work and cover fillets to be measured and paid for separately) including carriage of material in all lead and lift as per the direction of Engineer-in-charge. 2nd class deodar wood	Sqm	1,046.63			
68	Providing and fixing of 8mm thick (Armstrong AMBIENCE PLUS / Pergo, equivalent) Laminated wooden flooring, classification of use 31/23 with a surface abrasion resistance of class AC4 (4500 cycles) and impact resistance of less than 9 mm. with a 0.2 mm thick wear layer on top of a High Density Fiber substrate core (density ~ 940 Kgs/M3) of plank size 1285 mm X 186 mm having Bruce™ locking arrangement with an underlayment made of 3 mm thick natural colour foam of 30 Kgs/M3 density and 25 micron LDP film thermo fused to the main underlayment to form a single unit, with accessories like End profile, Transition profile, reducer, Stair nosing etc. complete. Installation to be carried out strictly as per Installation Guide of Armstrong using Armstrong PVC/ Aluminium profiles. The MDF Moulded Skirting to be 80/90mm, including carriage of material in all lead and lift as per the direction of Engineer-in-charge.	Sqm	2,270.60			

Annexure - A

Sl. No.	Description of Item	Unit	Quantity	Unit Rate (INR)		Amount (INR)
				In Figures	In Words	
A	**Civil Works**					
69	Providing and fixing anodised aluminium work for door, window, ventilators and partitions with extruded built up standard tubular and other sections of approved make conforming to IS 733 and IS 1285 anodised transparent or dyed to required shade according to IS 1868. (Minimum anodic coating of grade AC 15) fixed with rawlplugs and screws or with fixing clips, or with expansion hold fastners includingnecessary filling up of gaps at junctions, at top, bottom and sides with required PVC/neoprene felt etc. Aluminium sections shall be smooth, rust free, straight, mitred and jointed mechanically where ever required including cleast angle, aluminium, snap beading for glazinge/panelling, C.P. brass/stainless steel screws, all complete including carriage of material in all lead and lift as per the direction of Engineer-in-charge.					
a	For Fixed Portion- Powder coated aluminium (minimum thickness of powder coating 50 micron)	kg	180.29			
b	For shutters of doors windows & ventilators including providing and fixing hinges/pivots and making provisions for fixing of fittings where ever required including the cost of PVC/neoprene gaskets as required	kg	71.02			
70	Providing and fixing glazing in aluminium door, window, ventilator shutters and partitions etc. with PVC/ neoprene gasket etc. complete as per the architectural drawings and the directions of engineer-incharge. (Cost of aluminium snap beading shall be paid in basic item) including carriage of material upto all leads and lifts and as per direction of Engineer Incharge.	Sqm	9.58			
71	Providing and fixing in position collapsible steel shutters with vertical channels 20 mm X10 mmX2mm and braced with flat iron diagonals 20 mm X5 mm size with top and bottom rails of T.iron 40 mm X40 mm X6 mm with 38 mm dia steel pulley complete with bolts and nuts locking arrangements, stoppers, handles, including applying a priming coat of red lead paint including	Sqm	6.72			

Annexure - A

Sl. No.	Description of Item	Unit	Quantity	Unit Rate (INR)		Amount (INR)
				In Figures	In Words	
A	**Civil Works**					
	carriage of material upto all leads and lift and as per direction of Enigneer incharge.					
72	Providing and fixing anodized aluminium sliding door bolts anodized colour or shade with bolts and nuts screws etc complete including carriage of material in all lead and lifts and as per direction of Engineer Incharge.					
a	250x16mm	Each	22.00			
b	300mm×16mm	Each	5.00			
73	Providing and fixing aluminium tower bolts (barrel type) anodized transparent or dyed to required shade and colour with screws including carriage of material in all lead and lifts and as per direction of Engineer Incharge.					
a	200x10mm	each	54.00			
b	150X10mm	each	56.00			
74	Providing and fixing aluminium handles anodized transparent or dyed to required colour & shade with necessary screws etc complete, including carriage of material in all lead and lifts and as per direction of Engineer Incharge.					
	ii) 125mm	Each	54.00			
	ii) 100mm	Each	28.00			
75	Providing and laying Local stone slab flooring 20 mm (average) thick base of cement mortar 1:4 (1 cement :4 sand) laid over and jointed with grey cement slurry mixed with pigment to match the shade of the slab including carriage of material in all lead and lifts and as per direction of Engineer Incharge.25mm thick	sqm	238.96			

Annexure - A

Sl. No.	Description of Item	Unit	Quantity	Unit Rate (INR)		Amount (INR)
				In Figures	In Words	
A	**Civil Works**					
76	Providing and laying granite stone of approved shade in flooring 20mm (average) thickness base of cement mortar 1:3(1cement: 3 sand) laid over and jointed with grey cement slurry mixed with pigment to match the shade of granite stone i/c rubbing and polishing complete including carriage of material upto all leads and lifts and as per direction of Engineer incharge. 20mm.thick	Sqm	34.08			
77	Providing and fixing 10mm thick anti skid water proof stain and impact resistant heavy duty vitrified tiles Nitco or equivalent 600x600mmx10mm manufactured of approved shade and color in flooring, treads of steps and landings laid over 12mm thick cement mortar 1:3 (1 cement: 3 sand) jointed with cement slurry mixed with pigment to match the shade of tiles as required complete, including supply of all materials and carriage of materials up to all lead and lift and as per direction of Engineer In charge. (NITCO or equivanet make)	Sqm	194.83			
78	Providing and laying Duro stone vetrified tiles (300x300mmx8mm) in grey/coloured or of approved shade in flooring, treads of steps and landing laid on a bed of 12mm thick cement mortar 1:3 (1 cement : 3 sand) laid over and jointed with neat cement slurry finished with flush pointing in white cement mixed with pigment of required shade to match the shade of tiles complete including carriage of material upto all leads and lifts and as per direction of Engineer incharge. (NITCO or equivanet make)	Sqm	698.20			
79	Providing and laying Vitrified tiles (300x600mmx10mm)in coloured of required shade in skirting risers of steps and dados on 12mm thick cement mortar 1:3 (1cement : 3 sand) laid over and jointed with neat cement slurry finished with flush pointing in white cement mixed with pigment of required shade to match the shade of tiles complete including carriage of material upto all leads and lifts and as per direction of Engineer incharge.	Sqm	1,568.00			

Annexure - A

Sl. No.	Description of Item	Unit	Quantity	Unit Rate (INR)		Amount (INR)
				In Figures	In Words	
A	**Civil Works**					
80	Providing and laying vetrified tiles (1200x200x10mm in wooden /coloured or of approved shade in flooring, treads of steps and landing laid on a bed of 12mm thick cement mortar 1:3 (1 cement: 3 sand) laid over and jointed with neat cement slurry finished with flush pointing in white cement mixed with pigment of required shade to match the shade of tiles complete including carriage of material upto all leads and lifts and as per direction of Engineer incharge. (NITCO or equivanet make)	sqm	38.07			
81	Providing and laying flammed granite stone (light grey / Ruby Red) in flooring 20mm (average) thickness base of cement mortar 1:3 (1cement: 3 sand) laid over and jointed with grey cement slurry mixed with pigment to match the shade of granite stone i/c rubbing and polishing complete including carriage of material upto all leads and lifts and as per direction of Engineer incharge. 20mm.thick	Sqm	712.69			
82	Providing and laying finished/ polished granite stone (Grey or any other approved colour) **in skirting, riser of steps Dado and pillar** etc. 20 mm (average) thickness base of cement mortar 1:3 (1cement: 3 sand) laid over and jointed with grey cement slurry mixed with pigment to match the shade of granite stone i/c rubbing and polishing complete including carriage of material upto all leads and lifts and as per direction of Engineer in charge. 20mm thick	Sqm	458.80			
83	Providing and fixing Slate roofing with 7.5 cm. Double layer fixed on wooden battens (wood work be paid for separately) wih slates 40x20 cm. Size, including carriage of materials up to all lead and lift and as per direction of Engineer In charge.	Sqm	2,611.74			
84	Providing and fixing of Lead sheet (Thickness 2mm and density 2.30 kg/sqft.) on dormer joints, and chimney joints as per	Sqm	73.34			

Annexure - A

Sl. No.	Description of Item	Unit	Quantity	Unit Rate (INR)		Amount (INR)
				In Figures	In Words	
A	**Civil Works**					
	drawing & design including carriage of materials up to all lead and lift and as per direction of Engineer In charge.					
85	Providing and fixing 0.60mm thick pre-painted steel sheet in roofing with hot dipped metallic zinc coated sheet with top coat of regular modified polyester (RNP) organic coating of 20 microns over 5 microns primer coating to back coat of polyester of 5 microns over 5 microns primer coating i/c fixing with pre-painted steel screws and washers, etc. complete with all accessories as required as per the direction of Engineer-in-charge.	Sqm	165.58			
86	Providing and fixing ridges or hips 60 cm overall with 0.60mm thick preprinted steel sheets in roofing with hot dipped metallic zinc coated sheets with top coat of regular modified polyester organic coating of 20 microns over 5 microns primer coating + back coat of polyester of 5 microns over 5 microns primer coating i/c fixing with preprinted steel screws and washers complete with all accessories as required, including carriage of material up to all lead and lift and as per direction of Engineer in charge.	Rmt.	532.82			
87	Providing and fixing valley 60cm overall, 0.60mm thick pre-painted steel sheet in roofing with hot dipped metallic zinc coated sheet with top coat of regular modified polyester organic outing of 20 microns over 5 microns primer coating back coat of polyester of 5 microns over 5 microns primer coating i/c fixing with preprinted steel screws and washers complete with all accessories as required, including carriage of material up to all lead and lift and as per direction of Engineer in charge.	Rmt.	91.66			
88	Providing, fixing MS BP Sheet 1.66-2.00 mm thick in eaves board/ fascia/ soffits/ ceiling including cutting, fixing and welding to steel roof members and applying a coat of red lead primer complete as directed, including carriage of material up to all lead and lift and as per direction of Engineer in charge.	sqm	65.88			

Annexure - A

Sl. No.	Description of Item	Unit	Quantity	Unit Rate (INR)		Amount (INR)
				In Figures	In Words	
A	**Civil Works**					
89	Providing and laying of brick bat filling of nominal size in sunken portion in position to fill the portion, including carriage of material up to all lead and lift and as per direction of Engineer in charge.	Cum	103.70			
90	Providing and laying double layer water proofing treatment with layers of Bitumen felt type 3 grade 1 (hessian base self finished bitumen felt) sheet over wooden planks ceiling under slate roofing upto all levels, including carriage of material up to all lead and lift and as per direction of Engineer in charge.	Sqm	2,148.24			
91	Providing and laying four courses water proofing treatment with bitumen felt over roofs consisting of first and third courses of blow or / and residual bitumen applied hot at 1.45 kg per Sqm of area for each course second course of roofing felt type 3 grade 1 (hessian base self finished bitumen felt) and fourth and final course of stone grit 6 mm and down size or pea sized gravel spread at 6 cu.dm or 0.006 cu.m) per sqm including preparation of surface excluding grading complete & including carriage of material up to all leads and lifts and as per direction of Engineer in charge. (For depresson portion of toilets)	Sqm	711.61			

Annexure - A

Sl. No.	Description of Item	Unit	Quantity	Unit Rate (INR)		Amount (INR)
				In Figures	In Words	
A	**Civil Works**					
92	Designing, providing and laying proprietary chemical water proofing system consisting of polymer modified acrylic coating as approved and as recommended by the approved manufacturer . The work shall include Cleaning, Wire brushing & washing the entire surface area to remove old loose concrete / mortar, set slurry, nails, bitumen, oils & grease so as to make the surface totally dust free to receive the treatment, grouting porous surfaces including making 'V' grooves at junctions, cracks etc. Filling of cracks with Pressure grouting at construction joints or honeycombs with approved non shrink Cementious grout by mixing – 1 pouches (225 gms.) (Cebex 100 Fosroc) of shrinkage compensating admixture / as approved and 50 kgs of cement and sufficient water for flow ability, Grouting the same under pressure in pre-drilled holes by grouting pump after fixing PVC Nozzles at approved spacing etc. complete. Preparing a side vata/gola of 50X50 mm at the junction using polymer modified mortar. Providing and applying 3 coats of polymeric waterproofing coating mixed with cement. Applying three coats of highly flexible polymeric coating after proper surface preparations as specified by the manufacturer. Mixing by mechanical stirrer. Applying three coats at a minimum interval of 12-24 hrs between each coat with approved termination details. Further including horizontal surface protected with 20mm screeding in 1:4 mortar (1 cement : 4 sand)in proper gradient and vertical surface (wall) plastered with cement, sand mortar in ratio 1:4 (1 cement : 4 sand), finished in ready to receive Architectural finish, in correct line, level and plumb, curing, grouting, testing, etc. all complete to entire satisfaction of the Engineer in charge. work shall be tested by ponding water about 200mm for 72 hours, (Makes of water proofing treatment materials -BASF, Sika, Cico-Tapecrete, Fosroc,Pidilite or equivalent), Job shall include carriage of material up to all leads and lifts and as per direction of Engineer in charge	Sqm	107.92			

Annexure - A

Sl. No.	Description of Item	Unit	Quantity	Unit Rate (INR)		Amount (INR)
				In Figures	In Words	
A	**Civil Works**					
93	Steel work welded in built up sections, trusses and framed work, including cutting, hoisting, fixing in position and applying a priming coat of red lead paint, including carriage of material up to all lead and lift and as per direction of Engineer in charge. (Make- Tata, Jindal or equivalent)					
a	In trusses and trussed purling	Qtl	552.61			
b	In gratings framed guard bars, ladders, railling,brackets and similar works.	Qtl	136.08			
94	Suppling and fixing woven plains G.I. wire fencing of mesh 50mm to 150mm to any type of standard rails, straining bolts etc, including provision of binding wire, staples etc, including carriage of material in all leads and lifts and as per direciton of Engineer Incharge. .	Sqm	725.70			
95	Providing and applying Birla white wall care putty or equivalent over plastered surface after thoroughly brushing the surface free from mortar drops, dust, loose materials and the foreign matters, sand papered smooth to give final matter finish to the surface complete, including supply of all materials and carriage of materials up to all lead and lift and as per direction of Engineer In charge.	Sqm	4,837.22			
96	Distempering two coats with oil bound washable distemper of approved brand and manufacture and of required shade on undecorated wall surface to give an even shade over and including a priming coat with distemper primer of approved brand and manufacture after throughly brushing the surface free from mortar droppings and other foreign matter and also including preparing the surface even and sand papered smooth priming coat with distemper primer including carriage of material in all lead and lift & as per direction of Engineer in charge.	Sqm	1,335.40			

Annexure - A

Sl. No.	Description of Item	Unit	Quantity	Unit Rate (INR)		Amount (INR)
				In Figures	In Words	
A	**Civil Works**					
97	Providing and applying Lustre paint to walls of approved colour & shade of Asian Paints or equivalent, cleaning the surface and make it free from dust by scrapping, cleaning etc., including application of primer coat over the same; application of minimum two or more coats of lustre paint upto the desired finish of the EIC and protecting till the handing over of site including required scaffolding, cleaning, filling up cracks with approved crack filler etc., including carriage of material upto all leads and lifts and as per direction of Engineer incharge.	Sqm	3,150.20			
98	Painting two coats(excluding coat) on new wood and wood based surface with enamel paint to give an even shade including cleaning the surface of dirt,dust and other foreign matter,sand papering & stoping, including carriage of material upto all leads and lifts and as per direction of Engineer incharge. **With enamel paint other than white**	Sqm	262.01			
99	Providing Spirit polish two or more coats or as per sample approved on new wood and old wood based surfaces to give an even surface including cleaning the surface of all dirt, dust and sand papered smooth and including a coat of wood filler, etc. complete and carriage of materials up to all lead and lift and as per direction of Engineer In charge.	Sqm	2,527.64			
100	Finishing wall with weather proof exterior grade emulsion of approved design (Apex ultima or equivalent) on undecorated wall surfaces (two coats) to give an even shade and final finish after throughly cleaning the surface to remove all dirt, dust and other foreign matter etc including sand paper smooth complete including carriage of material upto all leads and lifts and as per direction of Engineer incharge.	Sqm	642.98			

Annexure - A

Sl. No.	Description of Item	Unit	Quantity	Unit Rate (INR)		Amount (INR)
				In Figures	In Words	
A	**Civil Works**					
101	Applying priming coat over new wood and wood based surfaces after and including prepering the surface by thoroughly cleaning oil,grease,dirt and other foreign matter) sand papering and knotting including carriage of material upto all leads and lifts and as per direction of Engineer incharge. **Readymixed paint brushing wood primer pink**	Sqm	60.00			
102	Painting two coats(excluding coat) on new wood and wood based surface with enamel paint to give an even shade including cleaning thesurface of dirt,dust and other foreign matter,sand papering & stoping including carriage of material upto all leads and lifts and as per direction of Engineer incharge. **With enamel paint other than white**	Sqm	40.00			
103	Polishing two coats with malamine polish of required shade on new wood and wood based surfaces to give an even surface including cleaning the surface of all dirt, dust and sand papered smooth and including a coat of wood filler including carriage of material upto all leads and lifts and as per direction of Engineer incharge.	Sqm	100.00			
104	Painting two coats (excluding priming coat) on new steel and other metal surfaces under coat with ready mixed paint brushing to give an even shade including cleaning the surface of all dirt, dust and other foreign matter with white ready mixed paint. including carriage of material in all lead and lifts	Sqm	216.72			
105	6mm thick Cement plaster to ceiling including sides and bottom of beams, soffits of stairs, ramps etc. with cement mortar 1:3 (1cement : 3 fine Sand) including curing and carriage, leads of all kinds of materials and scaffoldings etc. complete including carriage of material upto all leads and lifts and as per direction of Engineer incharge.	Sqm	573.89			

Annexure - A

Sl. No.	Description of Item	Unit	Quantity	Unit Rate (INR)		Amount (INR)
				In Figures	In Words	
A	**Civil Works**					
106	Providing and Laying 15mm cement plaster with cement mortar 1:6 (1cement : 6 fine Sand) in single coat on fair / rough side of brick/concrete/stone walls up to floor two level and above including arrises, internal rounded angles, chamfers and/or rounded angles not exceeding 80mm in girth and finished even and smooth etc. complete including other necessary arrangements and carriage of materials up to all lead and lift and as per direction of Engineer in charge	Sqm	3,728.37			
107	Providing in RCC work smooth finishing of the exposed surface with cement mortar 1:3 (1 cement :3 sand) up to floor two level and above including carriage of material upto all leads and lifts and as per direction of Engineer incharge.	Sqm	101.96			
108	Providing and Laying 20mm cement plaster with cement mortar 1:6 (1cement : 6 fine Sand) in single coat on fair / rough side of brick/concrete/stone walls up to floor two level and above including arrises, internal rounded angles, chamfers and/or rounded angles not exceeding 80mm in girth and finished even and smooth etc. complete including other necessary arrangements and carriage of materials up to all lead and lift and as per direction of Engineer in charge	Sqm	3,325.98			
109	Providing under layer for plinth protection of 75 mm thick (unconsolidated) bed dry brick/stone aggregate 40mm nominal size well rammed and consolidated and grouted with fine sand including preparation of ground, including carriage of materials up to all lead and lift and as per direction of Engineer in charge	Sqm	306.39			
110	Providing plinth protection 50mm thick in cement concrete 1:3:6 (1 cement : 3 sand : 6 graded stone aggregate 20mm nominal size) including carriage of material in all lead and lifts	Sqm	306.39			

Annexure - A

Sl. No.	Description of Item	Unit	Quantity	Unit Rate (INR)		Amount (INR)
				In Figures	In Words	
A	**Civil Works**					
111	Demolition of stone masonry below G.L. up to 1.5 Meters depth including stacking of serviceable materials and disposal of unserviceable materials to the approved dumping site or as per direction of engineer in charge. (No extra freight and dumping charges shall be payable to the contractor) **Rubble masonry in cement mortar**	Cum	9.60			
112	Demolition of stone masonry above G.L. up to floor two level and above including stacking of serviceable materials and disposal of unserviceable materials to the approved dumping site or as per direction of engineer in charge. (No extra freight and dumping charges shall be payable to the contractor) **Rubble masonry in cement mortar**	Cum	28.80			
113	Dismantling tiled floors laid in mortar up to all floor levels including stacking of serviceable materials in proper manner and disposal of unserviceable materials to the approved dumping site or as per direction of engineer in charge. (No extra freight and dumping charges shall be payable to the contractor) (Wooden/ concrete joists to be measured and paid separately).For thickness of tiles up to 25mm	Sqm	249.86			
114	Dismantling roofing including ridges, hips, valleys, gutters etc. including stacking of serviceable materials and disposal of unserviceable materials to the dumping site specified by municipal corporation or as per direction of engineer in charge. (No extra freight and dumping charges shall be payable to the contractor)	Sqm	300.00			
115	Demolition below GL up to 1.50 meters depth and disposal of unserviceable materials to the dumping site specified by municipal corporation or as per direction of engineer in charge. (No extra freight and dumping charges shall be payable to the contractor). Un-reinforced cement concrete up to 15 cms thickness.	Cum	48.34			

Annexure - A

Sl. No.	Description of Item	Unit	Quantity	Unit Rate (INR)		Amount (INR)
				In Figures	In Words	
A	**Civil Works**					
116	Scraping, removing, cleaning previously painted wood work surfaces with paint remover of approved brand as directed, without damaging the wood work, ornamentation and molding (No sharp tools or blow torch to be used), caustic soda, sand paper to have even and smooth surface for application of polishing the surface at all levels and for all heights, including supply of all materials and carriage of materials up to all lead and lift and as per direction of Engineer In charge.	Sqm	804.88			
117	Extra over item no.17160000 for removing dry or oil bound distempering on ceiling and or sloping roofs etc.	Sqm	239.91			
118	Dismantling of following Water Supply & Sanitary works, including stacking of pipes at site within 20 meters lead and as per the direction of the Engineer-In-charge (No extra freight and dumping charges shall be payable to the contractor)					
a	GI Pipe 15mm	Rmt	87.00			
b	Water Closet	Each	7.00			
c	Wall Mixer	Each	6.00			
d	Wash Basin	Each	6.00			
e	Stop Cock/Angle Valve	Each	38.00			
f	Bib Tap	Each	13.00			
g	Floor trap	Each	17.00			
h	Kitchen Sink	Each	2.00			
i	Gyser	Each	7.00			
j	PVC Pipe 75 mm	RMT	103.50			
k	PVC Pipe 110 mm	RMT	103.50			

Annexure - A

Sl. No.	Description of Item	Unit	Quantity	Unit Rate (INR)		Amount (INR)
				In Figures	In Words	
A	**Civil Works**					
119	Providing and fixing Twin bed SWISS TENT set with man area 10X12 feet front verandeh 10X6 feet and back toilet 10X5 feet and toilet as per drawing including carriage of materials up to all lead and lift and as per direction of Engineer in charge (Small size)	Each	5.00			
120	Providing and fixing garden benches as per following specifications, drawings and design, prior approval, including carriage of material upto all leads and lifts and as per direction of Engineer incharge.					
a	**Type 1**, Size: 60”(L) x 27”(W) x 32”(H), Seat Height: 16”, 3 Seater Bench, Cast Iron Bench with Mild Steel or Wooden Slates	Each	30.00			
b	**Type 2**, Size: 54”(L) x 18”(W) x 23”(H), Seat Height: 16”, 3 Seater Bench, Cast Iron Bench with Mild Steel or Wooden Slates	Each	30.00			
121	Supplying and fixing of readymade approved quality of concrete rest benches of NTC make or equivalent size 1500 L x 650 W x 1000 H (mm) including leveling the ground below the concrete bed of mix 1:2:4 (1 cement: 2 snd: 4 graded stone aggregate of 20 mm nominal size) wherever required including carriage & all leads and lifts of materials and as per directed by engineer in charge.	Each	1.00			
122	Provding and fixing dustbin as per drawings and design including carriage of material upto all leads and lifts and as per direction of Engineer incharge.	Each	21.00			

Annexure - A

Sl. No.	Description of Item	Unit	Quantity	Unit Rate (INR)		Amount (INR)
				In Figures	In Words	
A	**Civil Works**					
123	Grassing with selection Grade-1 Grass including watering and maintenance of the Lawn for 60 days or more till the grass from a thick lawn free from weeds and fit for moving including supplying good earth if needed (the good earth shall be paid for separately) including carriage & all leads and lifts of materials and as per directed by engineer in charge.	sqm	3,736.00			
124	Supplying and stacking of good earth at site and Spreading good earth in required thicknessincluding carriage & all leads and lifts of materials and as per directed by engineer in charge.	Cum	1,120.80			
125	Supplying and stacking at site dump manure from approved sources and also Spreading sludge dump manure in required thickness (duly screened through specified sieve), including carriage & all leads and lifts of materials and as per directed by engineer in charge.	Cum	693.00			
126	Planting permanent hedges including digging of trenches, 60 cm wide and 45 cm deep, refilling the excavated earth mixed with farmyard manure, supplied at the rate of 4.65 cum per 100 metres and supplying and planting hedge plants at 30 cm apart, including carriage & all leads and lifts of materials and as per directed by engineer in charge.	meter	293.00			
127	Supply & Plantation of selected specimen plants including mortitity replacement, loading- unloading, transportation and maintenance for 30 days after planting the plants, including carriage & all leads and lifts of materials and as per directed by engineer in charge.					
a	Christmas Tree 600mm	each	30.00			
b	Platicladus Orientals 300mm	each	30.00			
c	Gul Phanes 600mm	each	30.00			
d	Golden Bottle Brush 300mm	each	30.00			

Annexure - A

Sl. No.	Description of Item	Unit	Quantity	Unit Rate (INR)		Amount (INR)
				In Figures	In Words	
A	**Civil Works**					
e	Hairy Crush	each	30.00			
f	Brush Calendra 600mm	each	30.00			
g	Caryota Palm 10'-12'	each	30.00			
h	Cycus revolata 3'-4" Dia	each	30.00			
i	Fern 12"	each	30.00			
j	AZALIA 300 MM	each	30.00			
k	CAMALIA 300MM	each	30.00			
l	Rhododendron 300mm	each	30.00			
m	Hydrangia 300mm	each	30.00			
n	Rananuculus 300mm	each	30.00			
o	Jasmine creeper 300mm	each	30.00			
p	Pentas 300mm	each	30.00			
q	JUNIPEROUS Chinensis 1000mm	each	30.00			
r	Bignonia Vesusta Creeper 300mm	each	30.00			
s	Clerodendron Spendense 300mm	each	30.00			
t	Euphorbia milli 300mm	each	30.00			
u	Tabermontana Coronaria Variegated 600mm	each	30.00			
v	Hammelia Patens 600mm	each	30.00			
w	Bauganvillea Creeper 300mm	each	30.00			
x	Seasonal Flower Bed	Sqm	100.00			

Annexure - A

Sl. No.	Description of Item	Unit	Quantity	Unit Rate (INR)		Amount (INR)
				In Figures	In Words	
A	**Civil Works**					
128	Supply and planting following species best quality container grown healthy trees of 3 mt. min. height, well established & free from disease at site in 1.20 m dia holes, 1.20 m deep dug in the ground, mixing the soil with decayed farm yard/sludge manure, backfilling the hole watering etc as required including carriage & all leads and lifts of materials and as per directed by engineer in charge.					
a	Devdar(Cedrus deodara)	each	10.00			
b	Jacaranda mimosifolia (Neelli Gulmohar)	each	10.00			
c	Ficus Benjamina	each	10.00			
d	Ficus Black	each	10.00			
e	Ficus Pand Tapori	each	10.00			
	Road Works					
129	Construction of subgrade and earthen shoulders with approved material obtained from borrow pits with all lifts and leads, transporting to site, spreading, grading to required slope and compacted to meet requirement of Table 300.2 with lead upto 1000 m as per Technical Specification Clause 303.1.	Cum	150.00			
130	Compacting original ground supporting subgrade:- Loosening of the ground upto a level of 300 mm below the subgrade level, watered, graded and compacted in layers to meet requirement of Tables 300.1 and 300.2 for subgrade construction as per Technical Specification Clause 303.5.2.	Cum	150.00			

Annexure - A

Sl. No.	Description of Item	Unit	Quantity	Unit Rate (INR)		Amount (INR)
				In Figures	In Words	
A	**Civil Works**					
131	**Water Bound Macadam Subbase/ base WBM Grading 1 (90mm -40mm)** Providing, laying, spreading and compacting stone aggregates of specific sizes to water bound macadam specification including spreading in uniform thickness, hand packing, rolling with three wheel 80-100 kN static roller in stages to proper grade and camber, applying and brooming, stone screening/binding materials to fill-up the interstices of coarse aggregate, watering and compacting to the required density Grading 1 as per Technical Specification Clause 405. By Mechanical Means	cum	36.85			
132	**WBM Grading 2 (63mm -40mm)** Providing, laying, spreading and compacting stone aggregates of specific sizes to water bound macadam specification including spreading in uniform thickness, hand packing, rolling with smooth wheel roller 80-100 kN in stages to proper grade and camber, applying and brooming, stone screening/ binding materials to fillup the interstices of coarse aggregate, watering and compacting to the required density grading 2 as per Technical Specification Clause 405. By Mechanical Means	cum	25.16			
133	**WBM Grading 3 (50 mm -25 mm)** Providing, laying, spreading and compacting stone aggregates of specific sizes to water bound macadam specification including spreading in uniform thickness, hand packing, rolling with smooth wheel roller 80-100 kN in stages to proper grade and camber, applying and brooming, stone screening to fill-up the interstices of coarse aggregate, watering and compacting to the required density Grading 3 as per Technical specification Clause 405. By Mechanical Means	cum	25.16			

Annexure - A

Sl. No.	Description of Item	Unit	Quantity	Unit Rate (INR)		Amount (INR)
				In Figures	In Words	
A	**Civil Works**					
134	Providing and applying **Primer Coat** with Bitumen emulsion (SS-1) on prepared surface of granular base including cleaning of road surface and spraying primer at the rate of 0.90- 1.2 kg/sqm using mechanical means as per Technical Specification Clause 502. Medium Porosity	Sqm	305.00			
135	Providing and applying **Tack Coat** with Bitumen emulsion (RS-1) using emulsion pressure distributor at the rate of 0.30 to 0.35 kg per sqm on the prepared nonbituminous surfaces (cement concrete pavement) cleaned with Hydraulic broom as per Technical Specification Clause 503.	Sqm.	305.00			
136	Providing and laying **Bituminous Macadam** with hot mix plant using crushed aggregates of grading as per Table 500.4 premixed with bituminous binder, transported to site upto a lead of 1000 m laid over a previously prepared surface with paver finisher to the required grade, level and alignment and rolled to achieve the desired compaction as per Technical Specification Clause 504.	Cum	15.25			
137	Providing and laying 25mm thick **Semi Dense Bituminous Concrete** (**SDBC**) with 100-120 TPH batch type HMP producing an average output of 75 tonnes per hour using crushed aggregates of specified grading, premixed with bituminous binder @ 4.5 to 5 per cent of mix and filler, transporting the hot mix to work site, laying with a hydrostatic paver finisher with sensor control to the required grade, level and alignment, rolling with smooth wheeled, vibratory and tandem rollers to achieve the desired compaction as per MoRTH specification clause No. 508 complete in all respects	Cum	7.63			

Annexure - A

Sl. No.	Description of Item	Unit	Quantity	Unit Rate (INR)		Amount (INR)
				In Figures	In Words	
A	**Civil Works**					
138	Providing and laying at or near ground level factory made **Kerb Stone** of M-25 grade cement in position to the required line, level and curvature jointed with cement mortar 1:3 (1 cement : 3 coarse sand) including making joints with without grooves (thickness of joints except at sharp curve shall not to more than 5mm) including making drainage opening wherever required complete including painting etc. as per direction of Engineer-in-charge (length of finished kerb edging shall be measured for payment). (Precast C.C. kerb stone shall be approved by Engineerin- charge).	Cum	27.60			
	PRE FABRICATED CABIN					
139	Providing and Fixing of Ready made Pre fabricated Security Cabin (4'-0"x4'-0"x7'-0") AFG or equivalent, including carriage of material upto all leads and lifts and as per direction of Engineer incharge.	Each	3.00			
	Sub-Total (A1 – Janjehli Tourist Cultural Centre)					
A2	**Trekkers Hostel at Thunag**					
1	Cutting in earth work in all kind of soil up to all level and stacking the excavated soil as per the direction and than returning the same and hold in 15 cm. layer when required in foundation and plinth etc. also consolidating each layer by ramming and watering, also disposing off surplus excavated earth in all leads and lifts by manual/mechanical means including carriage of material up to all leads and lifts as per direction of Engineer in charge. Any loss/damage to the public/ private land or property shall be absolute responsibility of the Contractor.	Cum	1,097.18			

Annexure - A

Sl. No.	Description of Item	Unit	Quantity	Unit Rate (INR)		Amount (INR)
				In Figures	In Words	
A	**Civil Works**					
2	Excavation in foundation trenches etc. in earth work upto all lifts stacking the excavated soil not more than 3.00 mtr clear from edge of the excavation and then returning the stacked soil in 15cm layers when required into the plinth sides of foundation etc.,including all kind of soil, consolidating each deposited layer by ramming and watering and then disposing off all surplus excavated earth including carriage of material upto all leads and lifts as per direction of Engineer incharge.	cum	439.77			
3	Excavation in earth work and disposal of all excavated earth upto a lead of 20 metres and lift upto 1.50 metres, disposed earth to be levelled and neatly dressed:	Cum	95.00			
4	Providing form work with steel plates 3.15mm.thick welded with angle iron in frame 30 mmx 30 mmx 5 mm. so as to give a fair finish including centering, shuttering, strutting and propping etc. with wooden battens and ballies, height of propping and centering below supporting floor to ceiling in all height and removal of the same for in situ-reinforced concrete & plain concrete work in:(Shuttering as per the pattern specified in the Architectural Drawings including pointing, randering and finishing to smooth surfaces including carriage of material upto all leads and lifts and as per direction of Engineer incharge.					
a)	Foundation, footings basis of columns etc. and mass concrete.	sqm	441.83			
b)	Columns, pillars, posts and struts Circular or curved in plan	sqm	1,156.44			
c)	Beams, cantilivers, girders and lintels such as soffits of beams, Sides and soffits of beams, beam haunchings, cantilevers, bressumers and lintels not exceeding 1 Mtr. in depth in all heights from floor.	sqm	516.43			
d)	Flat surfaces such as soffits of suspended floor, roofs, landings and the like, floor etc. Up to 200 mm in thickness.	sqm	1,006.58			
e)	Stair cases with sloping or stepped soffits excluding landing	sqm	145.86			

Annexure - A

Sl. No.	Description of Item	Unit	Quantity	Unit Rate (INR)		Amount (INR)
				In Figures	In Words	
A	**Civil Works**					
f)	Edges of slabs and breaks in floors and walls:	Rmt.	302.81			
5	Providing and laying cement concrete mechanically mixed 1:4:8 (1 cement: 4 sand: 8 graded stone aggregate 40mm nominal size) curing complete excluding cost of form work in foundation and plinth including carriage of material upto all leads and lifts and as per direction of Engineer incharge	cum	75.76			
6	Filling in plinth with sand under floors including watering, ramming consolidating and dressing completen including carriage of material upto all leads and lifts and as per direction of Engineer incharge.	cum	94.82			
7	Stone/ Boulder filling of selected hard stone under floors including carriage of material upto all leads and lifts and as per direction of Engineer incharge.	cum	50.94			
8	Providing and laying cement concrete 1:2:4 (1 cement: 2 Sand: 4 graded stone aggregate 20mmnominal size) and curing complete excluding cost of form work in: foundation and plinth	Cum	2.53			
9	Providing and laying cement concrete 1 :1.5 :3 (1 Cement: 1.5 sand: 3 graded stone aggregate 20mm nominal size excluding form work and reinforcement) in foundation and plinth	Cum	4.30			
10	Providing and laying RCC M-25 mix design and curing complete excluding cost of form work and reinforcement for reinforcement concrete work including carriage of material in all leads and lifts and as per direciton of Engineer Incharge.					
a)	Foundations, footings bases of columns and the like and mass concrete.	cum	103.51			
b)	Column, pillars, posts and struts up to all levels.	cum	43.26			
c)	Suspended Floor roofs, landing and shelves and their support	cum	117.74			

Annexure - A

Sl. No.	Description of Item	Unit	Quantity	Unit Rate (INR)		Amount (INR)
				In Figures	In Words	
A	**Civil Works**					
	balconies, beams, girders, bressumers and cantilever up to all levels.					
d)	Stair cases (except spiral stair cases) excluding landing but including preparing of the surface and finishing of nosing upto floor two level.	cum	9.74			
11	Providing mild steel /tor steel reinforcement (Tata / Sail make) for RCC work including bending, binding and placing in position complete including carriage of material upto all leads and lifts and as per direction of Engineer incharge.	Kg	55,543.27			
12	Brick work using common burnt clay building bricks in foundation and plinth in:- Cement Mortar 1:6 (1 cement: 6 sand) Second Class Bricks	Cum	28.18			
13	Brick work (2nd class brick) using common burnt clay building bricks in **Super structure** in cement mortar 1:6 (1 cement: 6 sand) 2nd class brick including carriage of material upto all leads and lifts as per direction of Engineer incharge.	cum	307.08			
14	Half brick masonry using common burnt clay building bricks in cm 1:4 (1 cement: 4 sand) 2nd class bricks in **super structure** including carriage of material upto all leads and lifts and as per direction of Engineer incharge.	sqm	930.05			
15	Half brick masonry in common burnt clay building bricks in cm 1:4 (1 cement 4 sand) using second class bricks in foundation and plinth	sqm	5.00			
16	15mm cement plaster in single coat on fair side of brick/concrete/stone walls for interior plastering upto floor two level including arrises,internal rounded angles, chamfers and/or rounded angles not exceeding 80mm in girth and finished even and smooth. (cement mortar 1:6)	sqm	3,999.48			
17	6mm Cement plaster to ceiling in Cement mortar 1:3 (1 Cement: 3 Sand) including carriage of material upto all leads and lifts and as per direction of Engineer incharge.	sqm	711.27			

Annexure - A

Sl. No.	Description of Item	Unit	Quantity	Unit Rate (INR)		Amount (INR)
				In Figures	In Words	
A	**Civil Works**					
18	Providing Second Class Deodar wood frames of doors, windows, clerestory, windows and other frames wrought framed and fixed in position including carriage of material upto all leads and lifts and as per direction of Engineer incharge.	Cum	5.35			
19	Providing and fixing panelled glazed or panelled and glazed shutters for doors windows and clerestory windows, including black enamelled iron butt hinges with necessary screws including carriage of material upto all leads and lifts and as per direction of Engineer incharge. 40mm thick, 2nd class deodar wood	Sqm	240.85			
20	Providing and fixing wire gauge shutters using galvanised M.S. wire gauge of I.S. gauge designation 85g. With wire of dia 0.56mm for doors, windows and clerestory windows including bright finished black enamelled iron hinges with necessary screws. 40mm thick, 2nd class deodar wood	Sqm	66.63			
21	Extra for providing and fixing galvanised M.S. wire gauge of I.S. gauge designation no. 140 g to doors, window and clerestory windows with I.S. gauge designation no. 85 G with wire of dia 0.56 mm including carriage of material upto all leads and lifts and as per direction of Engineer incharge.	Sqm	66.63			
22	Providing and fixing bright finished brass sliding door-bolts with nuts and screws etc. complete and as per the direction of the Engineer-In-charge including all leads and lifts.					
a)	300x15 mm	Each	22.00			
b)	200x16 mm	Each	40.00			
23	Providing and fixing 100mm bright finished Brass floor door stopper with rubber cushion screws etc. to suit shutter thickness complete including carriage of material upto all leads and lifts and as per direction of Engineer incharge.	Each	65.00			

Annexure - A

Sl. No.	Description of Item	Unit	Quantity	Unit Rate (INR)		Amount (INR)
				In Figures	In Words	
A	**Civil Works**					
24	Providing and fixing brass Handles transparent or dyed to the required colour and shade with necessary screws etc complete comply with ISO standard including crriage of material upto all leads and lifts complete as per detailed dtawings / directions of Engineer in Charge.					
a)	150mm	Each	159.00			
b)	125mm	Each	69.00			
c)	100mm	Each	142.00			
25	Providing fixing bright finished Brass tower bolts with screws etc. complete including crriage of material upto all leads and lifts complete as per detailed dtawings / directions of Engineer in Charge.					
a)	250x10 mm	Each	42.00			
b)	200x10 mm	Each	16.00			
c)	150x10 mm	Each	146.00			
d)	100x10mm	Each	120.00			
26	Providing and fixing bright finished brass hard drawn hooks and eyes and as per the direction of the Engineer-In-charge including all leads and lifts. 150mm	Each	249.00			
27	Providing and fixing Godrej C071 Aluminum Alloy Door Closer or equivalent containing 1-Piece Door Closer Body, 1-Piece Arm, 1-Piece Screw Packet, 1-Piece Instruction Manual, able to mount in left/right, inside/outside door, making good the floors complete including including carriage of material upto all leads and lifts and as per direction of Engineer incharge.	Each	14.00			
28	Providing and fixing plain square edged cover fillets (beading) 50mmx12mm section, with wood screws in ceiling and lining	Rmt.	271.28			

Annexure - A

Sl. No.	Description of Item	Unit	Quantity	Unit Rate (INR)		Amount (INR)
				In Figures	In Words	
A	**Civil Works**					
	including mitring at junction including carriage of material upto all leads and lifts and as per direction of Engineer incharge. 1st class deodar wood.					
29	Providing and fixing plain square edged cover fillets (beading) 40mmx12mm section with wood screws in ceiling and lining including mitring at junctions including carriage of material upto all leads and lifts and as per direction of Engineer incharge. 1st class deodar wood.	Rmt.	315.60			
30	Providing woodwork in frames of false ceilings, partitions etc. sawn and put-up in position, including carriage of material up to all leads and lifts. in 2nd class Kail wood	Cum	8.20			
31	Providing and fixing wooden plank ceiling with planks over lapping each other and jointed with wood screws (frame work and cover fillets to be measured and paid for separately). 2nd class Deodar wood; 20mm thick	Sqm	273.42			
32	Providing and fixing wooden plank ceiling with planks below slates over lapping each other and jointed with wood screws (frame work and cover fillets to be measured and paid for separately), carriage of material up to all leads and lifts. 2nd class Deodar wood; 40mm thick	Sqm	273.78			
33	Providing and fixing of 8mm thick (Armstrong AMBIENCE PLUS / Pergo, equivalent) Laminated wooden flooring, classification of use 31/23 with a surface abrasion resistance of class AC4 (4500 cycles) and impact resistance of less than 9 mm. with a 0.2 mm thick wear layer on top of a High Density Fiber substrate core (density ~ 940 Kgs/M3) of plank size 1285 mm X 186 mm having Bruce™ locking arrangement with an underlayment made of 3 mm thick natural colour foam of 30 Kgs/M3 density and 25 micron LDP film thermo fused to the main underlayment to form a single unit, with accessories like	Sqm	527.80			

Annexure - A

Sl. No.	Description of Item	Unit	Quantity	Unit Rate (INR)		Amount (INR)
				In Figures	In Words	
A	**Civil Works**					
	End profile, Transition profile, reducer, Stair nosing etc. complete. Installation to be carried out strictly as per Installation Guide of Armstrong using Armstrong PVC/ Aluminium profiles. The MDF Moulded Skirting to be 80/90mm. Including carriage of material in all lead and lift.					
34	Providing and laying Digital tiles (300 x 600mm x 10mm) in grey/coloured of required shade in skirting risers of steps and dados on 12mm thick cement mortar 1:3 (1 cement: 3 sand) laid over and jointed with neat cement slurry finished with flush pointing in white cement mixed with pigment of required shade to match the shade of tiles complete including carriage of material upto all leads and lifts and as per direction of Engineer incharge.	sqm	548.71			
35	Providing and laying Duro stone vetrified tiles (300 x 300mm x 8mm) in grey/coloured or of approved shade in flooring, treads of steps and landing laid on a bed of 12mm thick cement mortar 1:3 (1 cement: 3 sand) laid over and jointed with neat cement slurry finished with flush pointing in white cement mixed with pigment of required shade to match the shade of tiles complete.	sqm	219.56			
36	Providing and fixing 10mm thickanti skid water proof stain and impact resistant heavy duty vitrified tiles Nitco or equivalent 600 x 600mm x 10mm manufactured of approved shade and colour in flooring, treads of steps and landings laid over 12mm thick cement mortar 1:3 (1 cement: 3 sand) jointed with cement slurry mixed with pigment to match the shade of tiles as required complete.	sqm	155.97			
37	Providing and laying granite stone (light grey / Ruby Red) in flooring 20mm (average) thickness base of cement mortar 1:3 (1cement: 3 sand) laid over and jointed with grey cement slurry mixed with pigment to match the shade of granite stone i/c rubbing and polishing complete (20mm thick)	sqm	22.47			

Annexure - A

Sl. No.	Description of Item	Unit	Quantity	Unit Rate (INR)		Amount (INR)
				In Figures	In Words	
A	**Civil Works**					
38	Providing and laying granite stone 20mm (average) thickness in risers of steps,skirting, dado and pillars laid on 12mm (average) thick base of cement mortar 1:3 (1cement: 3 sand) laid over and jointed with grey cement slurry mixed with pigment to match the shade of granite stone i/c rubbing and polishing complete as per drawing and design including carriage of material upto all leads and lifts and as per direction of Engineer incharge	sqm	132.87			
39	Kota stone slab flooring 20 mm (average) thick base of cement mortar 1:4 (1 cement: 4 sand) laid over and jointed with grey cement slurry mixed with pigment to match the shade of the slab including rubbing and polishing complete including carriage of material upto all leads and lifts	Sqm	39.62			
40	Slate roofing with 7.5 cm. Double layer fixed on wooden battens (wood work be paid for separately) with slates 40x20 cm. size including carriage of material upto all leads and lifts and as per direction of Engineer incharge.	Sqm	273.78			
41	Providing and fixing 0.60 mm thick prepainted steel sheet (Tata Make) in roofing with hot dipped metallic zinc / aluminium-zinc alloy coated sheet with top coat of regular modified polyster (RNP) organic coating of 20 microns over 5 microns primer coating to back coat of polyster of 5 mocrons over 5 microns primer coating including fixing with self driven steel screws / prepainted iron J or L hooks or seam bolts with prepainted limpet and rubber washers complete with all accesoriees as required as per the detailed drawings / directions of Engineer - in - charge.	Sqm	453.38			
42	Providing and fixing ridges or hips 60 cm overall with 0.60mm thick preprinted steel sheets in roofing (TATA /Century, Sale or equivelant) with hot dipped metallic zinc / zinc aluminium alloy coated sheets with top coat of regular modified polyster organic coating of 20 microns over 5 microns primer coating + back coat of polyster of 5 microns over 5 microns primer coating i/c fixing	Rmt.	111.24			

Annexure - A

Sl. No.	Description of Item	Unit	Quantity	Unit Rate (INR)		Amount (INR)
				In Figures	In Words	
A	**Civil Works**					
	with prepainted iron J or L hooks / self driven screws, bolts & nuts 6mm dia & preprinted G.I. limpet and bitumen washers complete with all accessories as required as per the direction of Engineer in Charges. including carriage of material upto all leads and lifts and as per direction of Engineer incharge					
43	Providing and fixing valley 90 cm overall 0.60mm thick with prepainted steel sheets in roofing with hot dipped metallic zinc / zinc aluminium alloy coated sheets with top coat of regular modified polyster organic coating of 20 microns over 5 microns primer coating + back coat of polyster of 5 microns over 5 microns primer coating i/c fixing with prepainted iron J or L hooks / self driven screws, bolts & nuts 6mm dia & preprinted G.I. limpet and bitumen washers complete with all accessories as required as per the direction of Engineer in Charges. (Tata /Century well or equivelent) including carriage of material upto all leads and lifts.	Rmt.	54.00			
44	Providing and fixing of Lead sheet (Thickness 2mm and density 2.30 kg/sqft.) on dormer joints, and chimney joints as per drawing, design and as per direction of Engineer-In-Charge including carriage of materials in all lead and lifts.	Sqm	142.90			
45	Steel work welded in built up sections / hollow section (Tata make or equivalent) trusses and framed work including cutting, hoisting, fixing in position and applying a priming coat of red lead paint including carriage of material upto all leads and lifts and as per direction of Engineer incharge .					
a)	In trusses and trussed purling in buildings.	Qtl.	192.56			
b)	In gratings framed guard bars, ladders, railling, brackets and similar works.	Qtl.	13.32			
46	Providing and laying water proofing treatment with layers of Bitumen felt type 3 grade 1 (hessian base self finished bitumen felt) sheet over wooden planks ceiling under slate roofing up to all leads and lifts and as per direction of Engineer in charge.	sqm	273.78			

Annexure - A

Sl. No.	Description of Item	Unit	Quantity	Unit Rate (INR)		Amount (INR)
				In Figures	In Words	
A	**Civil Works**					
47	Providing and laying of brick bat filling of nominal size in sunken portion in position to fill the portion including all kinds of leads, lifts and carriage etc. complete in all respects as per directions / entire satisfactions of the Engineer in Charge	Cum	38.06			
48	Applying Birla white wall care putty over plaster surface after thoroughly brushing the surface free from mortar foreign matters sand papered smooth to give final matter finish to the surface complete.	Sqm	2,334.65			
49	Distempering (two coats) with oil bound washable distemper of approved brand and manufacture and of required shade on undecorated wall surfaces to give an even shade over and including a priming coat with distemper primer of approved brand and manufacture after thoroughly brushing the surface free from mortar droppings and other foreign matter and also including preparing the surface even and sand papered smooth. Priming coat with distemper primer.	Sqm	2,334.65			
50	Spirit polish on new wood and wood based surfaces to give an even surface including cleaning the surface of all dirt dust and sand papered smooth and including a coat of wood filler, including carriage of material in all lead and lift, as per sample approved by the conservation architect	Sqm	606.86			
51	Providing under layer for plinth protection of 75 mm thick (unconsolidated) bed dry brick/stone aggregate 40mm nominal size well rammed and consolidated and grouted with fine sand including preparation of ground. including carriage of material in all lead and lifts	Sqm	162.07			
52	Providing plinth protection 50mm thick in cement concrete 1:3:6 (1 cement: 3 sand: 6 graded stone aggregate 20mm nominal size) including carriage of material in all lead and lifts	Sqm	162.07			
53	Providing and fixing Local Stone cobbles as per drawing and design and specifications 200 X 100 X 100mm or	sqm	175.00			

Annexure - A

Sl. No.	Description of Item	Unit	Quantity	Unit Rate (INR)		Amount (INR)
				In Figures	In Words	
A	**Civil Works**					
	100x100x100m in required pattern including carrriage of material upto all leads and lifts and as per direction of Engineer incharge.					
54	Providing and laying at or near ground level factory made kerb stone of M-25 grade cement in position to the required line, level and curvature jointed with cement mortar 1:3 (1 cement: 3 coarse sand) including making joints with without grooves (thickness of joints except at sharp curve shall not to more than 5mm) including making drainage opening wherever required complete including painting etc. as per direction of Engineer-in-charge (length of finished kerb edging shall be measured for payment). (Precast C.C. kerb stone shall be approved by Engineerin- charge).	Cum	2.00			
55	Providing and fixing Ready made cupboard of approved brand / modern pattern i/c luggage & shoe rack as per drawing and design and specifications given by the interior designer and necessary fittings and polishing, etc. complete including carriage of material upto all leads and as per direction of Engineer incharge (nothing shall be paid extra)	sqm	36.01			
56	Providing and fixing aluminium work for doors, windows, ventilators and partitions with extruded built up standard tubular sections/ appropriate Z sections and other sections of approved make conforming to IS: 733 and IS: 1285, fixed with rawl plugs and screws or with fixing clips, or with expansion hold fasteners including necessary filling up of gaps at junctions, at top, bottom and sides with required PVC/neoprene felt etc. Aluminium sections shall be smooth, rust free, straight, mitred and jointed mechanically wherever required including cleat angle, Aluminium snap beading for glazing / panelling, C.P. brass / stainless steel screws, all complete as per architectural drawings including carriage of material upto all leads and as per direction of Engineer incharge (Glazing and panelling to be paid for separately)					

Annexure - A

Sl. No.	Description of Item	Unit	Quantity	Unit Rate (INR)		Amount (INR)
				In Figures	In Words	
A	**Civil Works**					
a)	For doors windows and ventilators and glazed portions frames. For fixed portion. Powder coated aluminium (minimum thickness of powder coating 50 micron)	Kg	285.60			
b)	For shutters of doors windows & ventilators including providing and fixing hinges/pivots and making provisions for fixing of fittings where ever required including the cost of PVC/neoprene gaskets as required	Kg	631.01			
c)	Providing and fixing glazing in aluminium door, window, ventilator shutters and partition etc with glass panes of 5.50mm thickness (weight not less than 13.75 kg/ sqm) with PVC/neoprene gasket etc. complete as per the architectural drawings and the directions of Engineer-In-charge (cost of aluminium snap beading shall be paid in basic item.)	Sqm	50.28			
57	Providing and fixing of Fibre Glass Reinforced plastic (FRP) Door Frames of three legged of cross-section 90mm x 45mm having single rebate of 32mm x 15mm to receive shutter of 30mm thickness .The laminate doorframe moulded with fire resistant grade unsaturated polyester resin and chopped mat Doorframe laminate shall be 2mm thick and shall be filled with suitable wooden block in all the three legs. The frame shall be covered with fibreglass from all sides. MS stat shall be provided at the bottom to sturdy the frame.	Rmt.	9.90			
58	30mm thick fibreglass reinforced plastic (F.R.P.) flush door shutter in different plain and wood finish made with fire retardant grade unsaturated polyester resin, moulded to 3mm thick FRP laminate all around, with suitable wooden blocks inside at required places for fixing of fittings and polyurethane foam (PUF) / Polystyrene foam to be used as filler material throughout the hollow panel, casted monolithically with testing parameters of F.R.P. laminate conforming to table - 3 of IS: 14856 : 2000, complete as per direction of Engineer-in-charge.	sqm	3.15			

Annexure - A

Sl. No.	Description of Item	Unit	Quantity	Unit Rate (INR)		Amount (INR)
				In Figures	In Words	
A	**Civil Works**					
59	Providing and fixing Unistone slab 12.5mm cladding on RCC Surface side as on faces of Arch masonry walls etc.on 12mm. Thick cement plaster 1:3(1cement:3 sand) and jointed with cement slurry i/c scaffolding etc. complete.	sqm	904.65			
	Sub-Total (A2- Trekkers Hostel at Thunag)					
A3	**Allied Works Around Surrounding Areas of the Project**					
1	Excavation in foundation trenches etc. in earth work upto all lifts stacking the excavated soil not more than 3.00 mtr clear from edge of the excavation and then returning the stacked soil in 15cm layers when required into the plinth sides of foundation etc.,including all kind of soil, consolidating each deposited layer by ramming and watering and then disposing off all surplus excavated earth as directed by the Engineer with in incharge including carriage of material upto all leads and lifts upto the dumping site as proposed.	cum	28.83			
2	Excavation in earth work and disposal of all excavated earth upto a lead of 20 metres and lift upto 1.50 metres, disposed earth to be levelled and neatly dressed: in all classification of soil.	cum	479.40			
3	Filling in plinth with sand under floors including watering, ramming consolidating and dressing completeincluding carriage of material upto all leads and lifts and as per direction of Engineer incharge.	cum	3.44			
4	Random rubble dry stone Kharanja (soling) under floor including all charges & carriage of materials and as per directed by engineer	cum	479.40			
5	Providing form work with steel plates 3.15mm thick welded with angle iron in frame 30 mmx 30 mmx 5 mm so as to give a fair finish including centering, shuttering, strutting and propping etc. with wooden battens and ballies, height of propping and					

Annexure - A

Sl. No.	Description of Item	Unit	Quantity	Unit Rate (INR)		Amount (INR)
				In Figures	In Words	
A	**Civil Works**					
	centering below supporting floor to ceiling in all height and removal of the same for in situ-reinforced concrete & plain concrete work in shuttering as per the pattern specified in the Architectural Drawings including pointing, randering and finishing to smooth surfaces including carriage of material upto all leads and lifts and as per direction of Engineer incharge.					
a)	Foundation, footings basis of columns etc. and mass concrete.	sqm	53.76			
b)	Columns, pillars, posts and struts Circular or curved in plan	sqm	23.04			
c)	Beams, cantilivers, girders and lintels such as soffits of beams, Sides and soffits of beams, beam haunchings, cantilevers, bressumers and lintels not exceeding 1 Mtr. in depth in all heights from floor.	sqm	25.20			
6	Providing and laying cement concrete mechanically mixed 1:4:8 (1 cement: 4 sand: 8 graded stone aggregate 40mm nominal size) curing complete excluding cost of form work in foundation and plinth including carriage of material upto all leads and lifts and as per direction of Engineer incharge	cum	77.26			
7	Providing and laying cement concrete 1:2:4 (1 cement: 2 Sand: 4 graded stone aggregate 20mm nominal size) and curing complete excluding cost of form work in:	cum	9.33			
8	Providing and laying RCC M-25 mix design and curing complete excluding cost of form work and reinforcement, including carriage of material in all leads and lifts and height as per direction of Engineer In charge.					
a)	Foundations, footings bases of columns and the like and mass concrete.	cum	6.26			
b)	Suspended Floor roofs, landing and shelves and their support balconies, beams, girders, bressumers and cantilever up to all levels.	cum	3.04			
c)	Column, pillars, posts and struts up to all levels.	cum	1.73			

Annexure - A

Sl. No.	Description of Item	Unit	Quantity	Unit Rate (INR)		Amount (INR)
				In Figures	In Words	
A	**Civil Works**					
9	Providing mild steel /tor steel reinforcement (Tata / Sail make) for RCC work including bending, binding and placing in position completeincluding carriage of material upto all leads and lifts and as per direction of Engineer incharge.	Kg	2,589.90			
10	Brick work (2nd class brick) using common burnt clay building bricks in Super structure in cement mortar 1:4 (1 cement: 4 sand) 2nd class bricks up to all height including carriage of material upto all leads and lifts as per direction of Engineer in charge.	cum	5.70			
11	Providing and fixing 10mm thick anti skid water proof stain and impect resistent heavy duty vetrified tiles Nitco or equivalant 600x600mmx10mm manufactured of approved shade and colour in flooring, treads of steps and landings laid over 12mm thick cement mortar 1:3 (1 cement: 3 sand) jointed with cement slurry mixed with pigment to match the shade of tiles as required complete.	sqm	60.00			
12	Providing and fixing 10mm thick anti skid water proof stain and impect resistent heavy duty stone tiles Nitco or equivalant 300x300mmx10mm manufactured of approved shade and colour in flooring, treads of steps and landings laid over 12mm thick cement mortar 1:3 (1 cement: 3 sand) jointed with cement slurry mixed with pigment to match the shade of tiles as required complete.	sqm	20.00			
13	Providing and laying flammed granite (Gray colour or any other colour) stone in flooring 20 mm (average) thickness base of cement mortar 1:3(1cement: 3 sand) laid over and jointed with grey cement slurry mixed with pigment to match the shade of granite stone i/c rubbing and polishing complete as per drawing and design including carriage of material upto all leads and lifts and as per direction of Engineer incharge.	sqm	51.60			

Annexure - A

Sl. No.	Description of Item	Unit	Quantity	Unit Rate (INR)		Amount (INR)
				In Figures	In Words	
A	**Civil Works**					
14	Providing and laying finished/ polished granite stone (Grey or any other approved colour) in skirting, riser of steps Dado and pillar etc. 20 mm (average) thickness base of cement mortar 1:3 (1cement: 3 sand) laid over and jointed with grey cement slurry mixed with pigment to match the shade of granite stone i/c rubbing and polishing complete including carriage of material upto all leads and lifts and as per direction of Engineer in charge. 20mm thick	sqm	30.60			
15	Providing and Local stone slab flooring 40mm average thick on 20mm average thick base of cement mortar 1:4 (1 cement: 4 sand) laid over and jointed with grey cement slurry mixed with pigment to match the shade of the slab i/c rubbing and granite polish finish complete.	sqm	450.00			
16	Providing and Local stone slab flooring 25mm average thick on 20mm average thick base of cement mortar 1:4 (1 cement: 4 sand) laid over and jointed with grey cement slurry mixed with pigment to match the shade of the slab i/c rubbing and granite polish finish complete.	sqm	2397.00			
17	Slate roofing with 7.5 cm. Double layer fixed on wooden battens (wood work be paid for separately) wih slates 40x20 cm. Size.	Sqm	89.97			
18	Providing and laying water proofing treatment with layers of Bitumen felt type 3 grade 1 (hessian base self finished bitumen felt) sheet over wooden planks ceiling under slate roofing up to all leads and lifts and as per direction of Engineer in charge.	Sqm	89.97			
19	Providing and fixing 0.60mm thick prepainted steel sheet in roofing with hot dipped metallic zinc coated sheet with top coat of regular modified polyster (RNP) organic coating of 20 microns over 5 microns primer coating to back coat of polyster of 5 microns over 5 microns primer coating i/c fixing with prepainted iron J or L hooks, bolts and nuts 6mm dia metre with prepainted	Sqm	102.64			

Annexure - A

Sl. No.	Description of Item	Unit	Quantity	Unit Rate (INR)		Amount (INR)
				In Figures	In Words	
A	**Civil Works**					
	limpet and rubber washers complete with all accessories as required as per the direction of Engineer-in-charge. Detail of cost for 184.52 sqm.					
20	Providing and fixing ridges or hips 60 cm overall with 0.60mm thick preprinted steel sheets in roofing with hot dipped metallic zinc / zinc aluminium alloy coated sheets with top coat of regular modified polyster organic coating of 20 microns over 5 microns primer coating + back coat of polyster of 5 microns over 5 microns primer coating i/c fixing with prepainted iron J or L hooks / self driven screws, bolts & nuts 6mm dia & preprinted G.I. limpet and bitumen washers complete with all accessories as required as per the direction of Engineer in Charges. (Tata /Century well or equivelent)	Rmt.	34.40			
21	Providing and fixing M.S BP Sheet 1.66mm to 2mm thick in eaves board/facia/soffits/ceiling including cutting, fixing and welding to steel roof members and applying a coat of red lead primer complete as per the instruction of Engineer-in- Charge including carriage of material upto all leads and lifts and as per direction of Engineer incharge.	Sqm	5.20			
22	Steel work welded in built up sections / hollow section (Tata make or equivalent) trusses and framed work including cutting, hoisting, fixing in position and applying a priming coat of red lead paint including carriage of material upto all leads and lifts and as per direction of Engineer incharge .					
a)	In gratings framed guard bars, ladders, railling, brackets and similar works.	Qtl.	161.95			
b)	In trusses and trussed purlins inbuildings	Qtl.	42.64			
23	Providing and fixing M.S.round holding down or anchor bolts with nuts and washer plates complete	Qtl.	0.38			

Annexure - A

Sl. No.	Description of Item	Unit	Quantity	Unit Rate (INR)		Amount (INR)
				In Figures	In Words	
A	**Civil Works**					
24	Painting two coats (excluding priming coat) on new steel and other metal surfaces with enamel paint brushing to give an even shade including cleaning the surface of all dirt, dust and other foreign matters including carriage of material upto all leads and lifts and as per direction of Engineer incharge.	sqm	371.82			
25	Applying priming coat over new wood and old wood based surfaces after and including prepering the surface by thoroughly cleaning oil, grease, dirt and other foreign matterssand papering and knotting.	sqm	45.72			
26	Painting two coats(excluding coat) on new wood and wood based surface with enamel paint to give an even shade including cleaning the surface of dirt,dust and other foreign matter, sand papering & stoping with enamel paint other than white	Sqm	45.72			
27	Distempering two coats with oil bound washable distemper of approved brand and manufacture and of required shade on undecorated wall surface to give an even shade over and including a priming coat with distemper primer of approved brand and manufacture after thoroughly brushing the surface free from mortar droppings and other foreign matter and also including preparing the surface even and sand papered smooth priming coat with distemper primer including carriage of material in all lead and lifts	sqm	77.16			
28	Finishing wall with weather proof exterior grade emulsion of approved design (Apex-Ultima) or its equivalent on undecorated wall surfaces (two coats) to give an even shade and final finish after thoroughly cleaning the surface to remove all dirt, dust and other foreign matter etc including sand paper smooth complete including carriage of materials upto all leads and lifts and as per direction of Engineer in charge.	sqm	81.96			
29	15mm cement plaster in single coat on fair side of brick/concrete/stone walls for interior plastering upto all levels	sqm	262.08			

Annexure - A

Sl. No.	Description of Item	Unit	Quantity	Unit Rate (INR)		Amount (INR)
				In Figures	In Words	
A	**Civil Works**					
	including arises, internal rounded angles, chamfers and/or rounded angles not exceeding 80mm in girth and finished even and smooth in cement mortar 1:6 (1 cement: 6 sand) above floor two level including carriage of material upto all leads and lifts and as per direction of Engineer incharge.					
30	Applying Birla white wall care putty over plastered surface after thoroughly brushing the surface free from mortar drops dust, loose materials and other foreign matter sand papered smooth to give final finish to the surface complete including carriage of material in all lead and lift & as per direction of Engineer in charge.	sqm	89.22			
31	Applying priming with cement primer coat on new concrete/masonry/ asbestos cement/plastered surfaces after and including preparing the surface by thoroughly cleaning oil,grease,dirt and other foreign matter and sand papering as required with Readymixed primer ncluding carriage of materials upto all leads and lifts and as per direction of Engineer incharge.	sqm	81.96			
32	Providing plinth protection 50mm thick in cement concrete 1:3:6 (1 cement: 3 sand: 6 graded stone aggregate 20mm nominal size) including carriage of material upto all leads and lifts and as per direction of Engineer incharge.	sqm	18.96			
33	Providing under layer for plinth protection of 75 mm thick (unconsolidated) bed dry brick/stone aggregate 40mm nominal size well rammed and consolidated and grouted with fine sand including preparation of ground including carriage of material upto all leads and lifts and as per direction of Engineer incharge.	sqm	9.48			
34	Providing wood work in frames of doors, windows, clerestory windows, partion posts and other frames wrought,framed and fixed in position including making necessary mouldings as per exixting pattern and drawings and as per the direction of the Engineer-In-charge including all leads and lifts. 2nd class Deodar wood.	Cum	0.48			

Annexure - A

Sl. No.	Description of Item	Unit	Quantity	Unit Rate (INR)		Amount (INR)
				In Figures	In Words	
A	**Civil Works**					
35	Providing and fixing panelled glazed or panelled and glazed shutters for doors windows and clerestory windows. Including black enamelled iron butt hinges with necessary screws including carriage of material in all leads and lifts as directed by the Engineer-in-charge. 40mm thick, 2nd class Deodar wood.	sqm	22.86			
36	Providing wood work in frames of false celling partitions etc. sawn and put-up in position. 2nd class kail wood	cum	0.98			
37	Providing and fixing wooden plank ceiling with planks below slates over lapping each other and jointed with wood screws (frame work and cover fillets to be measured and paid for separately), carriage of material up to all leads and lifts. 2nd class Deodar wood, 40mm thick	sqm	75.68			
38	Providing and fixing 10 mm thick bison board in ceiling (ISI) mark of standard size with butt jointed and nails (frame work and cover fillets to be paid for separately) including carriage of materials upto all leads and lifts and as per directions of Engineer in charge	sqm	89.25			
39	Providing and fixing bright finished brass sliding door-bolts with nuts and screws etc. complete and as per the direction of the Engineer-In-charge including all leads and lifts.					
a)	300x15 mm	Each	2.00			
b)	200x16 mm	Each	3.00			
40	Providing and fixing brass Handles transparent or dyed to the required colour and shade with necessary screws etc complete comply with ISO standard including crriage of material upto all leads and lifts complete as per detailed dtawings / directions of Engineer in Charge.					

Annexure - A

Sl. No.	Description of Item	Unit	Quantity	Unit Rate (INR)		Amount (INR)
				In Figures	In Words	
A	**Civil Works**					
a)	150mm	Each	2.00			
b)	125mm	Each	3.00			
c)	100mm	Each	16.00			
41	Providing fixing bright finished Brass tower bolts with screws etc. complete including crriage of material upto all leads and lifts complete as per detailed dtawings / directions of Engineer in Charge.					
a)	250x10 mm	Each	10.00			
b)	150x10 mm	Each	10.00			
c)	100x10mm	Each	32.00			
42	Providing and fixing bright finished brass hooks and eyes and as per the direction of the Engineer-In-charge including all leads and lifts. 150mm	Each	32.00			
43	Demolition below G.L. upto 1.50Metres depth and disposal of nserviceable materials within all leads and lifts. Un-reinforced cement concrete upto 15 cm. thickness.	Cum	8.00			
44	Demolition above G.L. upto floor two levels and disposal of nserviceable materials within all leads and lifts.					
a)	Un-reinforced cement concrete upto 15 cm. thickness.	Cum	47.25			
b)	Stone slab/flagged floor etc.in cement Mortar	Sqm	135.00			
45	Demolition of stone masonry below G.L. upto 1.5 metres depth including stacking of serviceable materials and disposal of un-servicable materials within 20 metres lead. 469 panels	cum	18.99			
46	Dismantling roofing including ridges, hips, valleys, gutters etc. stacking the serviceable materials and disposal of un-	Sqm	89.25			

Annexure - A

Sl. No.	Description of Item	Unit	Quantity	Unit Rate (INR)		Amount (INR)
				In Figures	In Words	
A	**Civil Works**					
	serviceable materials within all lead and lifts. G.I. Sheet roofing.					
47	Taking out doors, windows and clerestory windows shutters (steel or wood) including stacking within 20 Metres lead.					
a)	Not exceeding 3 sq.m in are	Each	8.00			
b)	Exceeding 3 sqm in area	Each	1.00			
48	Dismantling plastering upto all floor levels including stacking of serviceable materials and disposal of un-serviceable materials within 20 metres lead to be measured and paid for (wooden/concrete joists separately) and as per the direction of the Engineer-In-charge including all leads and lifts.	Sqm	300.00			
49	Dismantling steel work upto span of 10 Metres and a height of 5 Metres in built up sections in angles, tees, flats and channels including all gusset plates, bolts, nuts, beadings etc. and stacking the materials within 20 Metres lead:- dismantling trusses, rafters, purlins etc.	Kg	2,499.00			
50	Demolition of brick work above G.L. upto floor two level including stacking of serviceable materials and disposal of un-serviceable materials within 20 Metres lead.	Cum	5.00			
51	Providing and fixing directional signage with 2150mm high 200mm thick post chamfered on all four corners in Approved sand stone on a base of 250X250X150mm with 40mm thick sandblasted Jodhpur stones fixed in the post with pattern engraved as per design along with fonts of hindi/english engraved and painted. Complete in all respect as per drawing under the instructions given by the Architect and EI (External Signages)	Each	4.00			
52	Providing and fixing signage 2250X1650mm made in Approved stone posts 250MM X 250MM each chamfered on all four corners on a base of 250X250X150mm with 65mm thick	Each	4.00			

Annexure - A

Sl. No.	Description of Item	Unit	Quantity	Unit Rate (INR)		Amount (INR)
				In Figures	In Words	
A	**Civil Works**					
	sandblasted Kandla stone fixed between the posts with cement sand mortar pattern engraved as per design along with fonts of hindi/english engraved and painted (including the foundation works) complete in all respect as per drawing under the instructions given by the Architect and EI (External Signages)					
53	Supplying and fixing of readymade approved quality of concrete rest benches of NTC make or equivalent size 1500 L x 650 W x 1000 H (mm) including leveling the ground below the concrete bed of mix 1:2:4 (1 cement: 2 sand: 4 graded stone aggregate of 20 mm nominal size) wherever required including carriage of material, all leads and lifts, mechanically and manually, complete as per direction of Engineer in charge.	Each	24.00			
54	Providing and fixing PVC dustbin (Syntex or equivalent) not less than 120 litre capacity hanged (rotating) on two MS pipes (medium quality) of 65mm dia of required length painted with anti corrosive paint as approved, grouted in cement concrete 1:2:4 padestals of size 0.25x0.255x0.30m 1:2:4 with proper anchorage in the ground as per drawings and design, including carriage of material upto all leads and lifts and as per direction of Engineer incharge (Rate shall include supply of all material and labour to complete the job)	Each	22.00			
	Sub-Total (Annexure A3 – Allied Works Around Surrounding Areas of the Project)					
	Sub-Total (A – Civil Works = A1 + A2 + A3)					

Annexure - B

Sl. No.	Description of Item	Unit	Quantity	Unit Rate (INR)		Amount (INR)
				In Figures	In Words	
B	**Water Supply and Sanitary Installation**					
1	Providing and fixing vitreous wash down Cera Make cat no s1013115 or equivalent white colour studio set along with C.P. JET, SEAT COVER, CISTERN and twin flushing valves etc. complete in all respect, water closet (European Type - WC pan) with integral 'p' or 's' trap including jointing the trap with soil pipe in cement mortar 1:1 (one cement, one sand) (with cistern, seat cover and flush fitting) Star White including carriage of materialss upto all leads and lifts and as per direction of Engineer in charge (snow white)	Each	104.00			
2	Providing and fixing vitreous China water closet Cera Make Cat No. s3010102 squatting pan or equivalent (Indian type WC. pan) size 580 mm (Earth work, bed concrete, foot rest and trap to be measured and paid for separately) including carriage of materials up to all leads and lifts and as per direction of Engineer in charge.	Each	4.00			
3	Providing and fixing 10.0/12.50/15.00 litres PVC cistern Cera Cat. No.B1010101 or equivalent with a pair of C.I. or mild steel brackets, complete with fitting such as lead valve with polythene float, C.P. Brass handle unions and couplings for connections with inlet, outlet and overflow pipes, 40 mm die C.P.flush bend including cutting holes in walls and making good the same and connecting the flush bend with cistern and closet (overflow) pipe to he treasured and paid for separately). Star White including carriage of materials upto all leads and lifts and as per direction of Engineer in charge.	Each	4.00			
4	Providing and fixing 10mm P/S Trap of approved colour including carriage of materialss upto all leads and lifts and as per direction of Engineer in charge.	Each	12.00			
5	Providing and fixing wash basinTable top wash basin Cera make Coana 600x400mm or equivalent including carriage of materials up to all leads and lifts and as per direction of Engineer in charge.	Each	114.00			

Annexure - B

Sl. No.	Description of Item	Unit	Quantity	Unit Rate (INR)		Amount (INR)
				In Figures	In Words	
B	**Water Supply and Sanitary Installation**					
6	Providing and fixing 15 mm nominal size Basin Mixer JAL Tansa series Cat. No. 82616 or equivalent with 450mm braided connection pipe including carriage of material upto all leads and lifts and as per direction of Engineer incharge.	Each	108.00			
7	Providing and fixing Double Bowl Steel sink Cera Make cat no. B4513201 of 940x490x205mm size or equivalent of approved design size: a) 610mmx455mmx225mm including carriage of materials up to all leads and lifts and as per direction of Engineer incharge (Darby lite 24" x 18")	Each	14.00			
8	Providing and fixing CP Sink Mixer Cera make Cat. No. F1014501 or equivalent with 150mm long swivel spout, connecting legs and wall flange including carriage of material up to all leads and lifts and as per direction of Engineer incharge.	Each	7.00			
9	Providing and fixing CP Brass chain 50 mm long and rubber plug 32mm for suits or wash hand basin including carriage of material up to all leads and lifts.	Each	12.00			
10	Providing and fixing wall mixer JAL make Cat No. 82770, set with over head shower 15mm or equivalent with bend pipe for over head shower including carriage of material up to all leads and lifts and as per direction of Engineer incharge.	Each	75.00			
11	Providing and fixing Urinal Cera make Cat No. S4020105 of size 235x335x695mm or equivalent including carriage of material up to all leads and lifts and as per direction of Engineer incharge.	Each	24.00			
12	Providing and fixing Urinal Division Plate Cera make Cat No S-4090101 or equivalent including carriage of material up to all leads and lifts and as per direction of Engineer incharge.	Each	24.00			
13	Providing and fixing bottel trap with fully casted body (with integral partition) 32mm with 190 and 125mm long connecting pipes and wall flang Cera make Cat. No.F8060101 150mm or equivalent including carriage of material upto all leads and lifts and as per the direction of Engineer -in-charge	Each	109.00			

Annexure - B

Sl. No.	Description of Item	Unit	Quantity	Unit Rate (INR)		Amount (INR)
				In Figures	In Words	
B	**Water Supply and Sanitary Installation**					
14	Providing and fixing CP Brass Towel Rack JAL Fani Series cat No 70530 or equivalent complete with C.P. Brass brackets fixed to wooden plugs, including carriage of material up to all leads and lifts and as per direction of Engineer incharge.	Each	96.00			
15	Providing and fixing CP brass soap dispenser JAL Feni Series Cat No 70547 or equivalent with CP brass brackets fixed to wooden cleats with CP brass screws including carriage of material up to all leads and lifts and as per direction of Engineer incharge.	Each	71.00			
16	Providing and fixing CP brass waste JAL Cat No 1052 for wash basin or sink 32 mm dia with half thread 32mm including carriage of material upto all leads and lifts and as per direction of Engineer incharge	Each	109.00			
17	Providing and fixing 500 x 700 mmX5mm Readymade mirror of superior glass mounted on wodden plugs Cera make cat no B3510112 or equivalent with C.P. brass screw including carriage of material upto all leads and lifts and as per direction of Engineer incharge	Each	36.00			
18	Providing and fixing mirror of superior glass mounted on wodden plugs plywood back fixed with CP brass screw including carriage of material upto all leads and lifts and as per direction of Engineer incharge	Sqm	61.63			
19	Rectangular Glass shelves (medium) JAL Feni Series Cat No 70552 or equivalent including carriage of material upto all leads and lifts and as per direction of Engineer incharge	Each	80.00			
20	Providing and fixing C.P brass soap dish JAL Feni Series Cat No 70540 or equivalent with CP brass brackets fixed to wooden cleats with CP brass screws including carriage of material to all leads and lifts and as per direction of Engineer incharge.	Each	91.00			

Annexure - B

Sl. No.	Description of Item	Unit	Quantity	Unit Rate (INR)		Amount (INR)
				In Figures	In Words	
B	**Water Supply and Sanitary Installation**					
21	Providing & Fixing in position best Indian make coat and hat hooks JAL Titas Series Cat No 74560-71, fixed into wall with CP brass screws and rawl plugs etc. complete including cutting and making good the walls etc.including carriage of material up to all leads and lifts and as per direction of Engineer incharge.	Each	70.00			
22	Providing and fixing C.P. Paper Holder with cutter JAL Feni Series Cat No 74548 or equivalent including carriage of material up to all leads and lifts and as per direction of Engineer incharge.	Each	97.00			
23	Providing and fixing CP Grab bar Cera Make JAL Titas Series Cat No 74576-71 or equivalent 350mm long including carriage of material upto all leads and lifts.	Each	50.00			
24	Providing and fixing CP brass bib tap (Long body) JAL Tansa Series Cat No 82362 or equivalent with wall flange and areator including carriage of material to all leads and lifts and as per direction of Engineer incharge. (Long nose)	Each	31.00			
25	Providing and fixing CP brass bib tap (Short body) JAL Chenab series Cat No. 3031 or equivalent with wall flange and areator including carriage of material to all leads and lifts and as per direction of Engineer incharge.	Each	103.00			
26	Providing and fixing P.V.C. waste pipe for wash basin and sink including carriage of material upto all leads and lifts and as per direction of Engineer incharge	Each	74.00			
27	Providind and fixing 15mm nominal size Pillar cock JAL Chenab series Cat No. 3021 or equivalent with aerator including carriage of material upto all leads and lifts.	Each	62.00			
28	Providing and fixing 15mm nominal size stop cock/ angle valve of JAL Chenab series Cat No. 3048 or equivalent with flange including carriage of material to all leads and lifts and as per direction of Engineer incharge.	Each	555.00			

Annexure - B

Sl. No.	Description of Item	Unit	Quantity	Unit Rate (INR)		Amount (INR)
				In Figures	In Words	
B	**Water Supply and Sanitary Installation**					
29	Providing and fixing C. P. Brass shower rose JAL Cat No 1281 with 15mm or 20 mm inle or equivalent with single flow and shower arm including carriage of material up to all leads and lifts and as per direction of Engineer incharge.	Each	77.00			
30	Providing & Fixing C.P. Towel Ring JAL Feni Series Cat No 70524 or equivalent including carriage of material upto all leads and lifts and as per direction of Engineer incharge	Each	102.00			
31	Providng and fixing CP Grating JAL Cat No 9305/9306 or equivalent including carriage of material upto all leads and lifts.	Each	264.00			
32	Providing and fixing PVC flexible connections pipe JAL Cat No 449, with brass unions 45cm length 15 mm nominal bore including carriage of material in all leads and lifts	Each	661.00			
33	Providing and fixing M.I.Union ISI marked for wash basin or sink: 32 mm dia including carriage of material to all leads and lifts and as per direction of Engineer incharge.					
	i) 15 mm dia	Each	238.00			
	ii) 20 mm dia	Each	162.00			
	iii) 25 mm dia	Each	89.00			
34	Providing and fixing brass full way valve with wheel including carriage of material up to all leads and lifts and as per direction of Engineer incharge.					
	a) With water storage 15mm size	Each	123.00			
	b) 20mm nominal bore	Each	58.00			
	c) 25mm nominal bore	Each	40.00			

Annexure - B

Sl. No.	Description of Item	Unit	Quantity	Unit Rate (INR)		Amount (INR)
				In Figures	In Words	
B	**Water Supply and Sanitary Installation**					
35	Constructing manhole with RCC top slab in 1:2:4 (1 cement: 2 sand: 4 graded stone aggregate) 20mm nominal size foundation concrete 1:4:8 (1 cement: 4 sand: 8 graded stone aggregate 40mm nominal size) inside plastering 15mm thick with cement mortar 1:3 (1 cement: 3 sand) finished with afloating coat of neat cement and making channels in cement concrete 1:2:4 (1 cement: 2 sand: 4 graded stone aggregate 20mm nominal size) finished smooth complete including curing and testingincluding carriage of material in all leads and lifts.					
	a) Inside size 800x800x500mm deep including C.I. cover with frame (Light duty single seal: Pattern) 455mmx 610mm integral dimensions total weight of cover and frame to be not less than 38 kgs (weight of cover 23kg and weight of frame 15 kg with 200mm thick walls of brick masonry using common burnt clay building bricks in cement mortar 1:3 (1 cement: 3 sand) including carriage of material in all leads and lifts.	Each	32.00			
36	Constructing masonry Chamber 30x30x50 cm inside, in brick work in cement mortar 1:6 (1 cement: 4 coarse sand) for sluice valve, with C.I. surface box 100mm top diameter, 160 mm bottom diameter and 180 mm deep (inside) with chained lid and RCC top slab 1:2:4 mix (1 cement: 2 coarse sand: 4 graded stone aggregate 20mm nominal size), i/c necessary excavation, foundation concrete 1:4:8 (1 cement: 4 fine sand: 8 graded stone aggregate 40 mm nominal size) and inside plastering with cement mortar 1:6 (1 cement: 6 coarse sand) 12 mm thick, finished with a floating coat of neat cement complete as per standard design including carriage of material up to all leads and lifts and as per direction of Engineer incharge.	Each	34.00			
37	Providing and fixing to wall ceiling and floor galvanized mild steel tubes (Medium Grade) tube fitting and clamps as per IS code including making good the wall ceiling and floor including carriage of material in all leads and lifts.					

Annexure - B

Sl. No.	Description of Item	Unit	Quantity	Unit Rate (INR)		Amount (INR)
				In Figures	In Words	
B	**Water Supply and Sanitary Installation**					
	a) 15mm nominal size	Rmt	1,433.03			
	b) 20mm nominal size	Rmt	645.00			
	c) 25mm nominal size	Rmt	365.00			
38	Providing and fixing in tranches galvanized mild steel tubes (Medium Grade) as per IS Code tube fitting exacavation for tranches will be measured and paid saprately including carriage of material up to all leads and lifts and as per direction of Engineer incharge. Jindal/Tata make or equivalent.					
	a) 25mm dia	Rmt	905.00			
	b) 20mm dia	Rmt	650.00			
39	Providing and fixing 150 mm X 6 Kgf pvc Poly plast sewerage pipe of working pressure not less than 4.5 kg per square metre (Four point five kilogramme per square metre) including filling the joints with approved adhesive complete including carriage of material up to all leads and lifts and as per direction of Engineer incharge.					
a)	150mm dia	Rmt.	1,130.00			
40	Providing and fixing 6 Kgf pvc Poly plast sewerage pipe of working pressure not less than 4.5 kg per square metre (Four point five kilogramme per square metre) including filling the joints with approved adhesive complete					
	a) 75 mm nominal size	Rmt	1,993.50			
	b) 100mm nominal size	Rmt	1,698.50			
41	Providing and fixing high pressure PVC fitting & accessories, including fixing with approved adhesive etc. complete.					
	a) Plain bend					
	i) 75mm dia	Each	258.00			

Annexure - B

Sl. No.	Description of Item	Unit	Quantity	Unit Rate (INR)		Amount (INR)
				In Figures	In Words	
B	**Water Supply and Sanitary Installation**					
	ii) 100mm dia	Each	257.00			
	iii) 150mm	Each	131.00			
	b) Door bend					
	i) 75mm dia	Each	122.00			
	ii) 100mm dia	Each	102.00			
	iii) 150mm	Each	69.00			
	c) Single equal junction of					
	i) 75 mm dia	Each	60.00			
	ii) 100 mm dia	Each	92.00			
	d) PVC Collar					
	i) 75 mm dia	Each	138.00			
	ii) 100 mm dia	Each	111.00			
	iii) 150mm	Each	61.00			
	e) PVC Cowl					
	i) 75 mm	Each	27.00			
	ii) 100 mm	Each	27.00			
	iii) 150mm	Each	11.00			
	f) Tee					
	i) 75 mm	Each	74.00			
	ii) 100 mm	Each	61.00			
	iii) 150mm	Each	43.00			
	g) Clamps					

Annexure - B

Sl. No.	Description of Item	Unit	Quantity	Unit Rate (INR)		Amount (INR)
				In Figures	In Words	
B	**Water Supply and Sanitary Installation**					
	i) 75 mm	Each	271.00			
	ii) 100 mm dia	Each	257.00			
	iii) 150mm	Each	73.00			
42	Providing and fixing PVC floor trap of self cleaning design with C.P screwed down or hinged grating with or without vent arm complete including cost of cutting and making good the walls and floors 75 mm niminal diameter (100mm)	Each	226.00			
43	Fixing water meter and stop cock in G.I. pipe line including cutting and threading the pipe and making long screws etc. complete (cost of water meter and stop cock to be paid separately) including carriage of material upto all leads and lifts and as per the direction of Engineer -in-charge	Each	11.00			
44	Supplying in cast iron cover with frame for man holes for frame of internal dimension 460x610mm rectanguler CI cover (light duty single sear pattern -I)the weight of vocer to be not less than 23 Kg including carriage of material upto all leads and lifts and as per direction of Engineer incharge	Each	57.00			
45	Providing and laying semicircular SW pipe 150mm dia over a bed of CC 1:2:4 including jointing the SW pipe with each other in drain within RR Masonry /cc edge wall including carriage of material upto all leads and lifts and as per direction of engineer incharge.	Rmt.	850.00			
46	Providing & Fixing, PVC Water Storage Tank double layerd Syntax Make or equivalent with necessary inlet & outlet connections of required dia & inlet valve cock of 20mm nominal board complete including correction & testing etc. complete 2000Ltr. Capacity i/c carriage of material in all leads and lifts.	Each	16.00			
47	Providing and fixing CI cowl including all kinds of leads, lifts and carriage etc. complete in all respects as per directions / entire satisfactions of the Engineer in Charge	Each	1.00			

Annexure - B

Sl. No.	Description of Item	Unit	Quantity	Unit Rate (INR)		Amount (INR)
				In Figures	In Words	
B	**Water Supply and Sanitary Installation**					
48	P/F 100mm dia CI Pipe including all kinds of leads, lifts and carriage etc. complete in all respects as per directions / entire satisfactions of the Engineer in Charge	Rmt	3.00			
	Sub-Total (B – Water Supply and Sanitary Installation)					

Annexure - C

Sl. No.	Description of Item	Unit	Quantity	Unit Rate (INR)		Amount (INR)
				In Figures	In Words	
C	**Electrical Installation**					
1	Wiring for light point / fan point / exhaust fan / call bell point with 1.5 Sq. mm. PVC insulated heat resistant flame retardant (HRFR) and low smoke single core (flexible) copper conductor cable in surface/recessed PVC conduit with modular switch, modular plates, suitable G.I. box and earthing the light point with 1.5 Sq.mm. HRFRLS/PVC insulated single core copper conductor cable as required.(SSK, Legrand make or equivalent)					
	a) Group A.	point	307.00			
	b) Group C.	point	593.00			
2	Wiring for twin control light point with 1.5 Sq. mm. PVC insulated heat resistant flame retardant (HRFR) and low smoke single core (flexible) copper conductor cable in surface/recessed PVC conduit, with 2-way modular switch, modular plates, suitable G.I. box and earthing the light point with 1.5 Sq.mm. HRFRLS/PVC insulated single core copper conductor cable as required. (Legrand/SSK or equivalent)					
	Group C.	point	73.00			
3	Supplying and fixing stepped type Modular fan regulator on the existing modular box including making connections etc. as required. (Legrand/SSK or equivalent)	Each	168.00			
4	Supplying and fixing following rating Modular switch /socket in the existing switch box / cover plate including connections etc. as required (Legrand/SSK or equivalent)					
	a) S.P. 5/ 6 Amps one way Modular switch.	Each	228.00			
	b) 5 pin, 5/ 6 Amps Modular socket outlet.	Each	228.00			

Annexure - C

Sl. No.	Description of Item	Unit	Quantity	Unit Rate (INR)		Amount (INR)
				In Figures	In Words	
C	**Electrical Installation**					
5	Supplying and fixing G.I. Modular box of (140mmx78mmx50mm) size with modular plate and cover in recess including providing and fixing 5 pin 5/6 amps modular socket outlet and 5/6 amps, modular switch, connections etc. as required (Legrand/ SSK/ Great white or equivalent)	Each	569.00			
6	Supplying and fixing G.I. Modular box of (140mmx78mmx50mm) size with modular plate and cover in recess including providing and fixing 6 pin 15/16 amps modular socket outlet and 15/16 amps, modular switch, connections etc. as required (Legrand/ SSK/ Great white or equivalent).	Each	359.00			
7	Supplying and fixing bakelite batten holderincluding connections etc. as required (Anchor, cona, L&T, Goldmedal)	Each	19.00			
8	Supplying and drawing LAN cable CAT 5E/OFC, solid copper conductor protected with PVC sheath in the existing surface / recessed, steel / PVC conduit as required (Havells/ Greatwhite/ Finolex/ RR Cable make or its equivalent	Meter	903.00			
9	Wiring for circuit/sub-main with following size PVC insulated heat resistant flame retardant (HRFR) and low smoke single core (flexible) copper conductor cable in surface/recessed PVC conduit along with 1 No. HRFRLS/PVC insulated single core copper conductor cable of same size for earthing as required (Havells/ Greatwhite/ Finolex/ RR Cable make or its equivalent)					
	a) 2x1.5 Sq. mm.	Meter	5166.00			
	b) 2x4.0 Sq. mm.	Meter	2640.00			
	c) 2x6.0 Sq. mm.	Meter	1654.00			
10	Wiring for circuit/sub-main with 4x4 sq.mm PVC insulated heat resistant flame retardant (HRFR) and low smoke single core (flexible) copper conductor cable in surface/recessed PVC conduit along with 2 No. 4 sq.mm (4x4+2x4) HRFRLS/PVC	Meter	683.00			

Annexure - C

Sl. No.	Description of Item	Unit	Quantity	Unit Rate (INR)		Amount (INR)
				In Figures	In Words	
C	**Electrical Installation**					
	insulated single core copper conductor cable of same size for earthing as required (Havells/Greatwhite/Finolex/RR Cable make or its equivalent)					
11	Wiring for circuit/sub-main with 4x6sq.mm PVC insulated heat resistant flame retardant (HRFR) and low smoke single core (flexible) copper conductor cable in surface/recessed PVC conduit along with 2 No. 6 sq.mm (4x6+2x6)HRFRLS/PVC insulated single core copper conductor cable of same size for earthing as required (Havells/Greatwhite/Finolex/RR Cable make or its equivalent)	Meter	948.00			
12	Wiring for circuit/sub-main with 4x10 sq.mm PVC insulated heat resistant flame retardant (HRFR) and low smoke single core (flexible) copper conductor cable in surface/recessed PVC conduit along with 2 No. 10 sq.mm (4x10+2x10) HRFRLS/PVC insulated single core copper conductor cable of same size for earthing as required (Havells/ Greatwhite/ Finolex/ RR Cable make or its equivalent)	Meter	850.00			
13	Supplying and fixing of following sizes of PVC conduit along with the accessories in surface / recess including cutting the wall and making good the same in case of recessed conduit as required:- (D-Plast, Polyfit or equivalent)					
	a) 20 mm. dia	Meter	1164.00			
	b) 25 mm. dia	Meter	749.00			
	c) 32 mm. dia	Meter	540.00			
14	Supplying and erection of 6 amps. to 32 amps. rating, 10 KA breaking capacity, 240 volts, 'C' curves, miniature circuit breaker of following poles in the existing MCB DB complete with connections etc. as required (Legrand/ Havells /C&S make or equivalent)					
	Single pole. Cat-A.	Each	574.00			

Annexure - C

Sl. No.	Description of Item	Unit	Quantity	Unit Rate (INR)		Amount (INR)
				In Figures	In Words	
C	**Electrical Installation**					
15	Supplying and erection of40/50/63 amp. rating, 10 KA breaking capacity, 240 volts, 'C' curves, miniature circuit breaker of following poles in the existing MCB DB complete with connections etc. as required Legrand/ Havells/ C&S make or equivalent)					
	a) Double pole. Cat-A.	Each	57.00			
	b) Triple Pole and neutral Cat-A	Each	10.00			
16	Supplying and fixing following rating, Four pole (three phase & neutral) 415volts, residual current circuit breaker (RCCB), having a sensitivity current up to 300 miliampers in the existing MCB DB complete with connections, testing and commissioning etc. as required (Legrand/Havells/C&S make or equivalent)					
	a) 40 Amps. Cat-A.	Each	9.00			
	b) 63 Amps. Cat-A.	Each	9.00			
17	Supplying and fixing of following way, single pole and neutral sheet steel MCB distribution board, 240 volts, on surface / recess, complete with tinned copper bus- bar, wire-set, neutral link, earth bar, din-bar, detachable gland plate, blanking plate, cable, identification labels interconnections, phosphatized and powder painted, including earthing etc. as required (Legrand/Havells/C&S make or equivalent)					
	a) Double door-4 way	Each	21.00			
	b) Double door-6 way	Each	50.00			
	c) Double door-8way	Each	22.00			
	d) Double door-12 way	Each	34.00			

Annexure - C

Sl. No.	Description of Item	Unit	Quantity	Unit Rate (INR)		Amount (INR)
				In Figures	In Words	
C	**Electrical Installation**					
18	Supplying and fixing of following way, triple pole and neutral sheet steel MCB distribution board, 415volts, on surface / recess, with provision for 4-pole MCB/RCCB/RCBO as incomer and SP MCBs as outgoing,complete with tinned copper bus-bar, wire-set, neutral link, earth bar, din-bar, detachable gland plate, blanking plate, cable, identification labels interconnections, phosphatized and powder painted, including earthing etc. as required (Legrand/ Havells/ C&S make or equivalent)					
	a) Double door-4 way (8+12),horizontal type	Each	3.00			
	b) Double door-6 way (8+18),horizontal type	Each	3.00			
	c) Double door-8way (8+24),horizontal type	Each	15.00			
	d) Double door-12way,horizontal type	Each	5.00			
19	Providing, installing, testing and commissioning of ceiling fan and regulator, including wiring, the down road of standard length(upto 30 Cm.) with 1.5 Sq.mm. PVC insulated copper conductor single core cable etc. as required (Usha/ Bajaj/ Havells/ Khaitan make or equivalent)					
	a) Ceiling Fan 1200 mm sweep, category-A	Each	132.00			
	b) Ceiling Fan 1400 mm sweep, category-A	Each	136.00			
20	Providing and installation of exhaust fan of following sizes in the existing opening, including making the hole to suit the size of the above fan, making good the damages, connections, testing and commissioning etc. as required (Usha/ Bajaj/ Havells/ Khaitan make or equivalent)					
	a) Exhaust Fan, Light duty, 300 mm sweep	Each	29.00			
	b) Exhaust Fan, Heavy duty, 300 mm sweep	Each	3.00			

Annexure - C

Sl. No.	Description of Item	Unit	Quantity	Unit Rate (INR)		Amount (INR)
				In Figures	In Words	
C	**Electrical Installation**					
21	Providing and installation of stationary storage type Electric water heater (Geyser) of various sizes by means of Expansion-bolts with nuts and washers, including embedding of expansion-bolts in the wall, providing and fixing of Non-return valve, Dead weight safety valve, 2 No C.P. connection rods 18" long, making good the damages, electrical connections, safety valve connections, testing and commissioning etc. as required: - (Bajaj/ Recold/ Sparehot/ or equivalent).					
	35 Liter capacity water heater (Cat-A)	Each	56.00			
22	Providing, installing, testing and commissioning of PTC Wall Mount Room Heater, including wiring, with 4 Sq.mm. PVC insulated copper conductor single core cable etc.of Bajaj Cat No. Majesty RPX 7 or equivalent make as required:	Each	93.00			
23	Supplying & fixing of G.I. modular boxes of following sizes along with modular base and cover plate for modular switches in recess as required (Legrand/Havells/ North-Star make/ Greatwhite or equivalent)					
	2 modules (78mmx78mmx50mm)	Each	276.00			
24	Supplying and fixing following rating Modular switch /socket in the existing switch box / cover plate including connections etc. as required (Legrand/Havells/North-Star make/Greatwhite or equivalent)					
	a) Telephone socket outlet, Modular.	Each	45.00			
	b) TV. Socket outlet, modular.	Each	48.00			
25	Supplying and drawing following pair of Fire Retardant, PVC insulated 0.5 sq.mm. (FR-Flexible) copper conductor, flat, unarmoured, telephone cable in existing surface / recessed, steel / PVC conduit as required.(Havells/Plaza/Finolex/RR					

Annexure - C

Sl. No.	Description of Item	Unit	Quantity	Unit Rate (INR)		Amount (INR)
				In Figures	In Words	
C	**Electrical Installation**					
	Cable/ Greatwhite or equivalent)					
	a) 1 Pair	Meter	1140.00			
	b) 3 Pair	Meter	730.00			
	c) 10 Pair	Meter	300.00			
26	Supplying and drawing co-axial TV cable,RG-6 grade,0.7mm (75 Ohms) copper conductor PE insulated, shielded with fine tinned copper braid and protected with PVC sheath in the existing surface / recessed, steel / PVC conduit as required (Havell's/Plaza/Finolex/RR Cable)	Meter	873.00			
27	Supplying and fixing Ding-Dong / Electronic musical bell, suitable for D.C./A.C. single phase,230 volts complete as required:- (legrand make or its equivalent)	Each	32.00			
28	Earthing with G.I earth pipe 4.5 mtr. And 40 mm dia., including accessories and providing masonry enclosure with cover plate having locking arrangement and watering pipe etc. (but without charcoal or coke and salt) complete as required.	Set	25.33			
29	Earthing with copper earth plate 600 mmx600 mmx 3 mm thick, including accessories and providing masonry enclosure with cover plate having locking arrangement and watering pipe etc. (but without charcoal or coke and salt) complete as required.	Set	9.00			
30	Extra for using salt and charcoal for G.I. or copper plate earth electrode complete as required.	Set	31.33			
31	Providing and fixing of lightning conductor finial, made of 25 mm dia. 300 mm long copper tube, having single prong at top, with 85 mm dia 3 mm thick copper base plate including holes etc. complete as required.	each	9.00			
32	Supplying and fixing copper tape 20mmx3mm thick on parapet or surface of wall for lightning conductor as required (for horizontal run)	Meter	89.00			

Annexure - C

Sl. No.	Description of Item	Unit	Quantity	Unit Rate (INR)		Amount (INR)
				In Figures	In Words	
C	**Electrical Installation**					
33	Supplying and fixing copper tape 20mmx3mm thick on parapet or surface of wall for lightning conductor as required (for vertical run)	Meter	74.00			
34	Supplying and fixing 25mmx5mm coper strip on surface or in recess for earth connections etc.as required	Meter	44.00			
35	Supplying and laying 8 SWG copper wire at 0.50 mtr. On surface or in recess for loop earthing along with existing surface/recess/submain wiring/cable as required as required.	Meter	264.00			
36	Providing, laying and fixing of one No. aluminium conductor, PVC insulated and PVC sheathed, armoured/XLPE power cable, working voltage 1100 volts grade on surface etc. of the required size :-(Havells/ Finolex or ISI make as approved).					
	a) Armoured cable 6sq. mm (2 core)	R.Mtr.	1363.00			
	b) Armoured cable 10 sq. mm (4core)	R.Mtr.	100.00			
	c) Armoured cable 35sq. mm (3.5 core)	R.Mtr.	118.00			
	d) Armoured cable 50 sq. mm (3.5 core)	R.Mtr.	70.00			
	e) Armoured cable 120 sq. mm (3.5 core)	R.Mtr.	70.00			
	f) Armoured cable 240 sq. mm (3.5 core)	R.Mtr.	70.00			
	g) Armoured cable 400 sq. mm (3.5 core)	R.Mtr.	30.00			
37	Providing and laying of one No. aluminium conductor, PVC insulated and PVC sheathed, armoured/XLPE power cable, working voltage 1100 volts grade direct in ground; to be laid 1 meter below the ground level including excavation and refilling the trench etc.as required, but excluding sand cushioning and protective covering:- (Havell,s or ISI make as approved by site incharge)					
	a) Armoured cable 6sq. mm (2 core)	R.Mtr.	3975.00			

Annexure - C

Sl. No.	Description of Item	Unit	Quantity	Unit Rate (INR)		Amount (INR)
				In Figures	In Words	
C	**Electrical Installation**					
	b) Armoured cable 10 sq. mm (4core)	R.Mtr.	375.00			
	c) Armoured cable 35sq. mm (3.5 core)	R.Mtr.	309.00			
	d) Armoured cable 50 sq. mm (3.5 core)	R.Mtr.	459.00			
	e) Armoured cable120 sq. mm (3.5 core)	R.Mtr.	75.00			
	f) Armoured cable 240 sq. mm (3.5 core)	R.Mtr.	400.00			
	g) Armoured cable 400 sq. mm (3.5 core)	R.Mtr.	50.00			
38	Providing and fixing following type of Ceiling fitting (Surface type) IRIS LED Sq Wipro make led complete with all accessories, connections, testing and commissioning etc. as required (Make Disano-Fosnova/ Igguzini/ Zumtobel or equivalent)					
	a) 16 watt Wipro Cat no.- LD74-151-XXX-65-XX or equivalent	each	266.00			
	b) octane led Wipro make LED 24 Watt cat no.- CRC01010503 or equivalent	each	279.00			
39	Providing and fixing following type of surface mounting decorative Ceiling fitting Wipro CRDL15R015HP60 - 17 W Recess Mounted square Slim LED complete with all accessories, connections, testing and commissioning etc. as required (Make Disano-Fosnova/ Igguzini/ Zumtobel or equivalent)					
	13 watt-LED	each	34.00			
40	Providing and fixing following type of surface mounting decorative Ceiling fitting (Surface type) Make - Wipro, Cat. No. CRC010R038HP57GI complete with all accessories, connections, testing and commissioning etc. as required (Make Disano-Fosnova/ Igguzini/ Zumtobel or equivalent)					
	24 watt-LED Ceiling fitting (Surface type) Make - Wipro, Cat. No. CRC010R038HP57GI	each	12.00			

Annexure - C

Sl. No.	Description of Item	Unit	Quantity	Unit Rate (INR)		Amount (INR)
				In Figures	In Words	
C	**Electrical Installation**					
41	Providing and fixing of ultra slimdecorative fixture with domestic electronic ballast, snap- on installers, suitable for 20 wattLED complete with all accessories (including one no LED Tube) including connections, testing and commissioning as required. High efficiency Trim LED LL20, aluminum linear batten 20w`					
	1x20 watt-LED	each	47.00			
42	Extra for fixing the louvers/shutters complete with frame for exhaust fans of all sizes as required:-	each	92.00			
43	Providing and fixing of ceiling, anti corrosion wall/ceiling mounted complete with all accessories including connections etc. as required (Philips/Bajaj/Wipro/Havell's make or as approved by site engineer).	each				
44	Supply and erection of wall braket single arm brown brush suitable for 1X7watt LED lamp Philips make Cat No: 36996 brown brush with all accessories including cost of 1No. 7 Watt LED lamp and connection as required or its equivalent as approved by engineer in charge (Philips/Disano-Fosnova/ Igguzini/ Zumtobel or equivalent)	each	59.00			
45	Supply and erection of wall braket double arm brown brush suitable for 2X7watt LED lamp Philips make Cat No: 36997 brown brush with all accessories including cost of 2 Nos. 7 Watt LED lamps and connection as required or its equivalent as approved by engineer in charge Philips/Disano-Fosnova/ Igguzini/ Zumtobel or equivalent)	each	15.00			
46	Providing and fixing of CRCA box type commercial fixture 1X36 W complete with all accessories (including LED tube) including connections, testing and commissioning as required.its equivalent as approved by engineer in charge. (Bajaj/Philips/Disano-Fosnova/ Igguzini/ Zumtobel or equivalent)	each	3.00			

Annexure - C

Sl. No.	Description of Item	Unit	Quantity	Unit Rate (INR)		Amount (INR)
				In Figures	In Words	
C	**Electrical Installation**					
47	Providing and fixing fan box (nominal size) complete in all respect as required:-	each	167.00			
48	Supplying and fixing of fancy mirror light Decorative compact energy efficient luminaire with anti-glare diffuser and electronic ballast suitable 20 w LED of all sizes and shapes, complete with all accessories including making connections, testing etc. as required or equivalent as directed by site engineer.	each	64.00			
49	Providing and fixing of wall fan 400mm sweep havells make swing premia wall fan The work involves assembly, fixing, connecting, commissioning and testing of the wall fan in complete respect (Usha/Baja/Havells/Khaitan make or equivalent)	each	18.00			
50	Providing and fixing RJ45 UTP information outlet modular, connections, etc. as required (For computer point) Legrand/Havells/ Greatwhite make or equivalent)	each	23.00			
51	Supplying and fixing of Havells Make (Maharaja) Cat no. LHLY07185099 1X40 W LED lamp, decorative non--integral Luminair with UV stablized polycarbonate diffuser suitable for 1X40 W LED, complete with all accessories including 0.50mtr G.I. pipe for fixing the light including LED lamp including making connections, testing etc. as required. or as approved by site incharge (Make Disano-Fosnova/ Igguzini/ Zumtobel or equivalent)	each	7.00			
52	Supply and fixing of Rubber insulation matt 2mtrx1mtrx12mm to prevent electric shock as reqd complete in all respects	each	6.00			
53	Supplying and fixing of energy saving LED lamps of approved make in the existing light fixtures (Philips/Bajaj/oshram /Havells make or equivalent)					
	a)LED lamp 7Watt (Philips)	each	50.00			

Annexure - C

Sl. No.	Description of Item	Unit	Quantity	Unit Rate (INR)		Amount (INR)
				In Figures	In Words	
C	**Electrical Installation**					
54	Supplying, storing, assembling, fixing, testing & commissioning the big size chandeliers including cost of hangers, chains or any other item required for fixing, including flexible wire from outlet to fitting. Jaquar make or its equavalent as approved by the engineer Incharge for indoor application suitable for installing on existing ceiings etc for designer lighting purpose complete in all respect. The work involves assembly, fixing, connecting, commissioning and testing of the fixtures. including carriage of material in all leads, lifts and heights through mechanical or manual trasport Jaquar or equivalent)	each	4.00			
55	Supplying, storing, assembling, fixing, testing & commissioning the small size chandeliers including cost of hangers, chains or any other item required for fixing, including flexible wire from outlet to fitting. jaquar make or its equivalent as approved by the engineer Incharge for indoor application suitable for installing on existing ceiings etc for designer lighting purpose complete in all respect. The work involves assembly, fixing, connecting, commissioning and testing of the fixtures including carriage of material in all leads, lifts and heights through mechanical or manual trasport. Jaquar or equivalent)	each	9.00			
56	**Main Panel 630 Amps.**					
	Design as per technical specification and drawings manufacture, insure, pack, transport to site, store and erect in proper position, testing and commissioning of cubicle pattern panel fabricated using 14 gauge CRCA MS Sheet steels/16 gauge CRCA for partition and vertical separations, Dust and vermin proof lockable doors, Single Compressions brass glands for Incoming/outgoing cables. All the Distribution panels shall be floor or wall Mounting type, having top/ bottom cable entry, front operated all complete with interconnections by tinned copper Bus Bars Color-coded heat shrinkable PVC sleeves and painted with powder coated process only with Egg shell white colored					

Annexure - C

Sl. No.	Description of Item	Unit	Quantity	Unit Rate (INR)		Amount (INR)
				In Figures	In Words	
C	**Electrical Installation**					
	from inside and light gray from outside as per shade 631 of IS-5 and as per final direction and approval of the Engineer Incharge.					
	Incoming					
	1 Nos. 630 A,FP, 35 kA, MCCB with Microprocessor based release having adjustable over load and adjustable short circuit, auxiliary contact, Rotary handel, spreader link, etc..					
	Bus bar					
	1 set of 1000 Amps, 415 volts, 3 phase, 4 wire colour coded aluminium TPN bus bar, after taking all derating factors.					
	Outgoings					
	1No. 400 A, FP, 35 kA, MCCB with thermal magnetic release and spreader terminals.					
	1 No 150 Amps F.P. 35 kA, MCCB with thermal magnetic release and spreader terminals.					
	2 Nos. 63 Amps F.P. 25 kA, MCCB with thermal magnetic release and spreader terminals.					
	3 Nos. 32 Amps F.P. 16kA, MCCB with thermal magnetic release					
	1 no. MCB TPN 63 Amp.					
	Instruments					
	1 Nos. 0-500 Volts, 96 sq.mm digital voltmeter with protection fuses and selector switch.					
	1 Nos. 0-630 Amps, 96 sq.mm digital ammeter with 400/5A CT's and selector switch.					
	1 Set R Y B phase indicating lamps with protection fuses.					

Annexure - C

Sl. No.	Description of Item	Unit	Quantity	Unit Rate (INR)		Amount (INR)
				In Figures	In Words	
C	**Electrical Installation**					
	1 Lot of control wiring.					
	1 Set of designation plates.	Each	1			
57	**LT panel 400 Amp.**					
	Design as per technical specification and drawings manufacture, insure, pack, transport to site, store and erect in proper position, testing and commissioning of cubicle pattern panel fabricated using 14 gauge CRCA MS Sheet steels/16 gauge CRCA for partition and vertical separations, Dust and vermin proof lockable doors, Single Compressions brass glands for Incoming/outgoing cables. All the Distribution panels shall be floor or wall Mounting type, having top/ bottom cable entry, front operated all complete with interconnections by tinned copper Bus Bars Color-coded heat shrinkable PVC sleeves and painted with powder coated process only with Egg shell white colored from inside and light gray from outside as per shade 631 of IS-5 and as per final direction and approval of the Engineer Incharge.					
	Incoming					
	1 Nos. 400A, FP, 25 kA, MCCB with Microprocessor based release having adjustable over load and adjustable short circuit, auxiliary contact, Rotary handel, spreader link, etc.					
	Bus bar					
	3 set of 100 Amps, 415 volts, 3 phase, 4 wire colour coded copper TPN bus bar, after taking all derating factors.					
	Outgoings					
	1 No. 150 A, FP, 35 kA, MCCB with thermal magnetic release and spreader terminals.					
	3 No. 100 A, FP, 25 kA, MCCB with thermal magnetic release and spreader terminals.					

Annexure - C

Sl. No.	Description of Item	Unit	Quantity	Unit Rate (INR)		Amount (INR)
				In Figures	In Words	
C	**Electrical Installation**					
	3 No. 63 A, FP, 10 kA, MCCB with thermal magnetic release and spreader terminals.					
	3 no. MCB TPN 63 Amp.					
	2 no. MCB DP 40 Amp.					
	Instruments					
	1 Nos. 0-250 Volts, 96 sq.mm digital voltmeter with protection fuses and selector switch.					
	1 Nos. 0-150 Amps, 96 sq.mm digital ammeter with 150/5A CT's and selector switch.					
	1 Set R Y B phase indicating lamps with protection fuses.					
	1 Lot of control wiring.					
	1 Set of designation plates.	Each	1			
58	Feeder Piller 63 A					
	Supplying, fixing, testing & commissioning the wall mounted, vermin proof, dust proof, indoor duty, industrial type double door with IP-45 protection, access from the front and shall have a lock on an outer door, These sub distribution boards are suitable for surface / recessed mounting as per standard specifications with details as follows i/c carriage of material in all leads, lifts & height as per the direction of Engineer-In charge. Legrand make or its equivalent.					
	Incoming					
	1 No. 63 Amps.25 KA FP MCCB					
	1 No M.F. Meter with V,A,F					
	Outgoings					

Annexure - C

Sl. No.	Description of Item	Unit	Quantity	Unit Rate (INR)		Amount (INR)
				In Figures	In Words	
C	**Electrical Installation**					
	4 Nos. 63 Amps FP feeder each having one number 3 phase 415 Volts, 50 Hz, 10 KA front operated 63 Amps.FP MCB					
	8 Nos.6A-20A (10 KA) SP MCB					
	Bus bars					
	1 set of 415V, 3 phase 4 wire, 50 HZ Colour coded copper bus bars.					
	Neutral Link					
	Suitable for all outgoings.					
	Earthing Terminals.					
	Earthing terminals suitable for all outgoings.	each	2.00			
59	(FEEDER PILLAR) 100 Amp					
	Design as per technical specification and drawings manufacture, insure, pack, transport to site, store and erect in proper position, testing and commissioning oKIOSK TYPE double door with IP-65 protection lvl. cubicle pattern panel fabricated using 14 gauge CRCA MS Sheet steels/16 gauge CRCA for partition and vertical separations, Dust and vermin proof lockable doors, Single Compressions brass glands for Incoming/outgoing cables. All the Distribution panels shall be floor or wall Mounting type, having top/ bottom cable entry , front operated all complete with interconnections by tinned copper Bus Bars Color-coded heat shrinkable PVC sleeves and painted with powder coated process only with Egg shell white colored from inside and light gray from outside as per shade 631 of IS-5 and as per final direction and approval of the Consultant i/c carriage of material in all leads, lifts & height as per the direction of Engineer-In charge. Legrand make or its equivalent.					
	Incoming					
	1 Nos.100 Amps TPN feeder each having one number 3 phase 415 Volts, 50 Hz, 25 KA front operated 100 Amps.TP MCCB					

Annexure - C

Sl. No.	Description of Item	Unit	Quantity	Unit Rate (INR)		Amount (INR)
				In Figures	In Words	
C	**Electrical Installation**					
	with suitable rating astronomic timer complete with contactor etc. and all other accessories.					
	Outgoings					
	04 Nos. 32 Amps FP feeder each having one number 3 phase 415 Volts, 50 Hz, 10 KA front operated 32 Amps.FP MCB					
	10 Nos SP MCB ,C curve 10KA					
	Bus bar					
	1 set of 160 Amps, 415 volts, 3 phase, 4 wire colour coded aluminium TPN bus bar, after taking all derating factors.					
	Instruments					
	1 No 0-500 Volts, 96 sq.mm voltmeter with protection fuses and selector switch.					
	1 No 0-100 Amps, 96 sq.mm ammeter with 100/5A CT's and selector switch.					
	1 Set R Y B phase indicating lamps with fuses.					
	1 Lot of control wiring.					
	1 Set of designation plates.	each	1.00			
60	Sub Panels 125 A					
	Supplying, fixing, testing & commissioning the wall mounted, vermin proof, dust proof, indoor duty, industrial type double door with IP-45 protection, access from the front and shall have a lock on an outer door, These sub distribution boards are suitable for surface / recessed mounting as per standard specifications with details as follows i/c carriage of material in all leads, lifts & height as per the direction of Engineer-In charge. Legrand make or its equivalent.					
	1 Nos.125 Amps TPN feeder each having one number 3 phase 415 Volts, 50 Hz, 25 KA .					
	Outgoings					

Annexure - C

Sl. No.	Description of Item	Unit	Quantity	Unit Rate (INR)		Amount (INR)
				In Figures	In Words	
C	**Electrical Installation**					
	05 Nos. 63 Amps FP MCB,10KA					
	06 Nos. 32 Amps FP MCB,10KA					
	Bus bar					
	1 set of 200 Amps, 415 volts, 3 phase, 4 wire colour coded aluminium TPN bus bar, after taking all derating factors.					
	Instruments					
	1 No Voltage, Current, 3 phase meter					
	1 Set R Y B phase indicating lamps with fuses.					
	1 Lot of control & powe wiring.					
	1 Set of designation plates.	each	3.00			
61	Supplying, Installation of 300x50x2mm G.I. Perforated wiremesh cable tray with suspended material, Coupler, etc. Legrand make or its equivalent.	mtr	25.00			
61	Supplying, Installation of 100x50x2mm G.I. Perforated wire mesh cable tray with suspended material, Coupler, etc. Legrand make or its equivalent.	mtr	25.00			
63	Fire Material ,For inspection of Chief Electrical Inspector, Mats, Fire Extiguishers, HT/LT Danger Plates, Framed Shock Treatment chart, First Aid Box etc	job	2.00			
64	Supplying and fixing of fancy brass Track light including suitable track/ channel of approved make Decorative compact energy efficient luminaire with anti-glare diffuser and electronic ballast suitable 24/36 LED of all sizes and shapes, complete with all accessories including making connections, testing etc. as required or equivalent as directed by site engineer (Make Disano-Fosnova/ Igguzini/ Zumtobel or equivalent).	Each	50.00			
65	Supplying and fixing of fancy brass Picture light including suitablebase of all sizes and shapes of approved make Decorative compact energy efficient luminaire with anti-glare diffuser and electronic ballast suitable 12/24/36W LED of all	Each	14.00			

Annexure - C

Sl. No.	Description of Item	Unit	Quantity	Unit Rate (INR)		Amount (INR)
				In Figures	In Words	
C	**Electrical Installation**					
	sizes and shapes, complete with all accessories including making connections, testing etc. as required or equivalent as directed by site engineer (Make Disano-Fosnova/ Igguzini/ Zumtobel or equivalent)					
66	Supplying and fixing of fancy step light including suitablebase of all sizes and shapes of approved make Decorative compact energy efficient luminaire with anti-glare diffuser and electronic ballast suitable 3/5W LED of all sizes and shapes, complete with all accessories including making connections, testing etc. as required or equivalent as directed by site engineer (Make Disano-Fosnova/ Igguzini/ Zumtobel or equivalent)	Each	42.00			
	Electrical (External)					
67	Supplying and fixing of LED projection light, 8W, CCT 2700K, CRI >85, SS finish, IP 67 luminaire, IP67 SS with high pressure die cast housing, housing acting as heat sink, with suitable hanging structure duly painted according to its size requirment complete with all accessories including making connections, testing etc. as required or as approved by site incharge (Make Disano-Fosnova/ Igguzini/ Zumtobel or equivalent).	Each	30.00			
68	Supplying and fixing of pathway light, 3W, CCT-2700K, CRI>85, IP 68 luminaire 3W IP68 SS with high pressure die cast housing, housing acting as heat sink, with suitable mounting/ hanging structure duly painted according to its size requirment complete with all accessories including making connections, testing etc. as required or as approved by site incharge (Make Disano-Fosnova/ Igguzini/ Zumtobel or equivalent).	Each	15.00			
69	Supplying and fixing of LED up light, 15W, 2700K, CRI>85, IP 68 luminaire 15W IP68 SSwith high pressure die cast housing, housing acting as heat sink, with suitable mounting/ hanging structure duly painted according to its size requirment complete with all accessories including making connections, testing etc. as required or as approved by site incharge (Make Disano-Fosnova/ Igguzini/ Zumtobel or equivalent).	Each	11.00			

Annexure - C

Sl. No.	Description of Item	Unit	Quantity	Unit Rate (INR)		Amount (INR)
				In Figures	In Words	
C	**Electrical Installation**					
70	Supplying and fixing of LED down light 8W, CCT 2700 K, CRI>85, IP66, SS finish IP66 SSwith high pressure die cast housing, housing acting as heat sink, with suitable wall mounting/ hanging structure duly painted according to its size requirment complete with all accessories including making connections, testing etc. as required or as approved by site incharge (Make Disano-Fosnova/ Igguzini/ Zumtobel or equivalent).	Each	30.00			
71	Providing and fixing of outdoor duty LED Wall washer Light 36W, CCT 2700K, CRI>85, IP 67, Pressure diecast Aluminum body for indoor/outdoor application with suitable mounting structure for installation in coves/facia/eaves board etc. including connections etc. complete in all respect as per direction of the Engineer In charge. The work involves assembly, fixing, connecting, commissioning and testing of the fixtures. The fitting will be complete with ballasts, LED lamps control wiring etc. complete in all respect including carriage of material in all leads, lifts and heights through mechanical or manual trasport (Make Disano-Fosnova/ Igguzini/ Zumtobel or equivalent).	Each	7.00			
72	Providing and fixing of outdoor duty LED bollard light, 13W warm white, CRI>90, IP 66 , Pressure diecast Aluminum body, with epoxy cationic electro coating to improve the resitance to corrosion and saline environments, for outdoor application suitable for installing in gardens etc including excavation, PCC (1:2:4) alongwith pfoviding and fixing of anchor bolts complete as required. The work involves assembly, fixing, connecting, commissioning and testing of the fixtures. The fitting will be complete with ballasts, LED lamps control wiring etc. complete in all respect including carriage of material in all leads, lifts and heights through mechanical or manual transport (Make Disano-Fosnova/ Igguzini/ Zumtobel or equivalent).	Each	10.00			

Annexure - C

Sl. No.	Description of Item	Unit	Quantity	Unit Rate (INR)		Amount (INR)
				In Figures	In Words	
C	**Electrical Installation**					
73	Providing and fixing of outdoor duty LED 80W LED flood light, warm white, CRI>70, Grey finish, Pressure diecast aluminum body, Power factor>0.9, THD<15%, 60000 hrs life, IP66 for indoor/outdoor application with suitable mounting structure for installation in ceiling/wall/ coves/facia/eaves board etc. including connections etc. complete in all respect as per direction of the Engineer In charge. The work involves assembly, fixing, connecting, commissioning and testing of the fixtures. The fitting will be complete with ballasts, LED lamps control wiring etc. complete in all respect including carriage of material in all leads, lifts and heights through mechanical or manual transport (Make Disano-Fosnova/ Igguzini/ Zumtobel or equivalent).	Each	15.00			
74	Providing and fixing of indoor/outdoor duty LED 15 W LED die cast aluminium luminare UV stablized smooth outside, dustproof, Pressure diecast aluminum body, Power factor>0.9, THD<15%, 50000 hrs life, IP65 Cat No: L70B50 make for indoor/outdoor application with suitable mounting structure for installation in ceiling/wall/ coves/facia/eaves board etc. including connections etc. complete in all respect as per direction of the Engineer In charge. The work involves assembly, fixing, connecting, commissioning and testing of the fixtures. The fitting will be complete with ballasts, LED lamps control wiring etc. complete in all respect including carriage of material in all leads, lifts and heights through mechanical or manual trasport (Make Disano-Fosnova/ Igguzini/ Zumtobel or equivalent).	Each	10.00			
75	Supply, erection and testing of decorative heritage type ornamental pole with brakets and lamp fixture containing two no. 30/ 40W LED lamp on 3000mm high C.I. pole (DOUBLE ARM) for road side/ lawn lighting in position on M.S. base plate and padestal including excavation of pit and refilling the same with cement concrete of 1:3:6 /1:2:4 from the bottom of the flushing the ground level including supply and fixing of 2nos 2cX 6 sqmm AL.Armd cable gland, 1 no. 6 AMP. SP MCB with din bar	Each	62.00			

Annexure - C

Sl. No.	Description of Item	Unit	Quantity	Unit Rate (INR)		Amount (INR)
				In Figures	In Words	
C	**Electrical Installation**					
	arrangement and earthing links complete in all respect and two nos. 40 w LED lamp with one coat of paint Complete in all respect or as approved by site incharge (Make Disano-Fosnova/ Igguzini/ Zumtobel or equivalent).					
	Fire Fighting Works					
76	Providing and fixing stored pressure vessel ABC Powder type fire extinguishers consisting of seamless cylindrical body, squeeze lever discharge valve fitted with pressure indicating guage internal discharge tube, 30cms long high pressure discharge hoase, discharge nozzle, suspension bracket, confirming to IS: 13849 finished externally with red enamel paint and fixed to wall with brackets complete with internal charge. Ceasefire or its equivalent.					
	Capacity 5 Kg	Each	25.00			
	Capacity 10 Kg	Each	20.00			
	Fire Alarm System					
77	Supply, installation, testing and commissioning of UL listed/FM approved Intelligent Addressable Fire alarm control panel. The panel shall be networkable & expandable having required no. of loop for 850 addressable detectors & 200 addressable devices. The panel shall have 240 V AC power supply, automatic battery charger, 24 V SMF batteries sufficient for 24 hour in standby and 15 minutes in alarm complete as per specification. UL listed 6" Touch screen LCD display supporting smart degrade mode operation. UL listed 12 Amps inbuilt power supply with 70Ah capacity battery charge. UL Listed Lead Acid battery charging capacity for second dry power supply (MAKE: SIEMENS/ ANSUL/ SINTESO)	No.	1.00			

Annexure - C

Sl. No.	Description of Item	Unit	Quantity	Unit Rate (INR)		Amount (INR)
				In Figures	In Words	
C	**Electrical Installation**					
78	Supply, Installation, Testing & commissioning of UL listed active Repeater Panel with Back lit LCD display to provide event information and LED display for status indication of Repeater panel (MAKE: SIEMENS/ ANSUL/ SINTESO)	No.	1.00			
79	Supply, Installation, Testing & commissioning of UL listed Intelligent Addressable Multi application multicriteria detector with responsiveness of photoelectric, thermal technology and false alarm resistance along with base. The detector shall have Tri color LED for Normal, Fault & Alarm condition. The detector shall have infrared Light Emitting Diode & photo sensing diode. The detector shall have facility to mount in different comprehensive environment like Hostile environment, Parking Garage, HVAC Ducts, Precious storage, Transformer rooms Ware house, Dormitory and normal working environments. Vendor to include suitable mounting box as required (MAKE: SIEMENS/ ANSUL/ SINTESO)	Nos.	99.00			
80	Supply, Installation, Testing & commissioning of UL listed Intelligent Analog Addressable Type Rate of Rise/Fixed Heat Detector with inbuilt turbo Isolator Complete with LED, addressing done by the FACP, complete with Mounting Base as required (MAKE: SIEMENS/ ANSUL/ SINTESO)	Nos.	8.00			
81	Supply, Installation, Testing & commissioning of UL listed Intelligent addressable Manual Call Point - Pull station, polarity insensitive technology complete as per specification (MAKE: SIEMENS/ ANSUL/ SINTESO)	Nos.	15.00			
82	Supply, Installation, Testing & commissioning of UL listed Multi Tone Hooter suitable for Alarm siren. It shall meet the audibility requirements for smoke alarms as specified in UL Listed Single and Multiple Station Smoke Alarms (MAKE: SIEMENS/ ANSUL/ SINTESO)	Nos.	5.00			

Annexure - C

Sl. No.	Description of Item	Unit	Quantity	Unit Rate (INR)		Amount (INR)
				In Figures	In Words	
C	**Electrical Installation**					
83	Supply, Installation, Testing & commissioning of UL listed addressable Control cum Monitor Module (Independent Single Input & Single Output) polarity insensitive technology, in complete as per specification for AHUs, Hooter, Flow switches, third party system integration etc. (MAKE: SIEMENS/ ANSUL/ SINTESO)	Nos.	10.00			
84	Supply, Installation, Testing & commissioning of UL listed Fault Isolators complete as per specification. The fault isolator shall not occupy any address point in the loop.(MAKE: SIEMENS/ ANSUL/ SINTESO)	Nos.	25.00			
85	Supply, Installation, Testing & commissioning of UL listed base sounder having no additional addressing with a option of free configurable dual tone sounder having 2 out of 11 tonability selection. (MAKE: SIEMENS/ ANSUL/ SINTESO)	Nos.	5.00			
86	Supply, Installation, Testing & commissioning of Response Indicators outside the rooms for getting fire indications of detectors installed above false ceiling / for particular zone / for Loop devices / as a Panel to loop cable complete as required. (MAKE: SIEMENS/ ANSUL/ SINTESO)	Nos.	5.00			
87	Supply Installation, Testing & commissioning of PA system micro processor based operator console complete with 2 x 500 W channel mixing Amplifiers (One as hot standby) with 1 no cardoid gooseneck micro phone, I no CD Player deck MP3 format. A 10 zoon floor selector console a change over Panel for connection to the Fire Alarm Panel, a Mains Panel a standby battery of 25 Ah SMF of 2 x 12 Volts and a monitor panel all pre wired and rack mounted complete in all respects & as per specification. PA system shall be coupled to the Fire Alarm System. (MAKE: AURAL/ FGE/SIEMENS/SINTESO)	Nos.	5.00			

Annexure - C

Sl. No.	Description of Item	Unit	Quantity	Unit Rate (INR)		Amount (INR)
				In Figures	In Words	
C	**Electrical Installation**					
88	Supply, Installation, Testing & commissioning of Talk back reciever complete as per specification (MAKE: AURAL/ FGE/SIEMENS)	Nos.	15.00			
89	Supply, Installation, Testing & commissioning of Ceiling/ Wall Mount Speaker with operations from 3 to 6 Watts (MAKE: AURAL/ FGE/SIEMENS/)	Nos.	18.00			
90	Supplying & Fixing of Energy saving display EXIT sign board Glass type specially designed for classic décor with excellent quality high efficiency and long life for single / both side display, well ventilated, powder coated having nominal size LED lamp, battery backup 6 hour to be installed on wall / ceiling etc. complete as required (MAKE: FGE/ LEGRAND/ ABB)	Nos.	20.00			
91	Providing & installing self glow signs luminescent U-1000 Alu. sheet with 2 mm thickness sheet on the wall / ceiling etc for the size of (14"x10", 10"x8") as reqd.(Make : Nightglow/FGE)	Sq.in	3000.00			
92	Supplying and laying of 1.1 KV Grade 2 X 1.5 sq.mm. copper cables on surface / conduit complete with clamps etc as reqd. (MAKE: GLOSTER/ GRANDLAY/ Havells)	Mtr.	250.00			
93	Supplying and laying of 4 x 1.5 sq.mm. PVC insulated PVC sheathed copper conductor armoured control cable of 1.1 KV grade complete as required. **(From Main Fire Control Panel to the Repeater Panel)** (MAKE: GLOSTER/ KALINGA/ GRANDLAY/ HYGLOW)	Mtr.	150.00			
94	Supplying and laying of 6 x 1.5 sq.mm. PVC insulated PVC sheathed copper conductor armoured control cable of 1.1 KV grade complete as required (MAKE: GLOSTER/ GRANDLAY/ Havells).	Mtr.	800.00			

Annexure - C

Sl. No.	Description of Item	Unit	Quantity	Unit Rate (INR)		Amount (INR)
				In Figures	In Words	
C	**Electrical Installation**					
95	Providing and fixing of following size of black enameled MS conduit in recess / on surface including all accessories, proper saddling at every 1200 mm intervals and hooks, where imbedded in the wall, ms junction / pull boxes, gi fish wire, complete as required. Dieplast or its equivalent.					
	a) 40 mm dia Conduit	Mtr	120.00			
	b) 32 mm dia Conduit	Mtr	320.00			
	c) 25 mm dia Conduit	Mtr	650.00			
96	3KVA UPS on line, Double conversion, Microprocessor controlled, With LCD, Input Voltage: 230V Freq: 40-70HZ P.F.:0.95 Output: 220Volt ± 2% Freq: 50HZ ± 0.05HZ, P.F.: 0.8 With SMF Batteries for 30min backup on full load. (Make: EMERSON/ GUTOR/ MELINGERIN/ MITSUBISH)	Nos	1.00			
	CCTV & EPBAX Works					
97	Providing and fixing IP Bullet Outdoor Night Vision 12.0mm weather proof camera (Hikvision / samsung techwin make) Image Senser: 1/3" DIS, Resolution: 600TVL, Lens: Fixed 6 mm, LUX: 0.1, AGC: Auto, White Balance: Auto CODE matel body weather proof including three year maintance and as per direction of Engineer-incharge and specifications as required including carriage of material in all lead and lifts through mechanical and manual transport.	Each	10.00			
98	Providing, fixing IP Dome Night Vision Indoor 3.6/6.0mm cameras (Hikvision /samsung techwin make), Image Senser: 1/3" CCD, Resolution : 600TVL, Lens: Fixed 3.6, LUX: 0.1AGC: Auto, White Balance: Auto including three year maintance and as per direction of of Engineer-incharge and specifications as required including carriage of material in all lead and lifts through mechanical and manual transport. Samsung or its equivalent.	Each	10.00			

Annexure - C

Sl. No.	Description of Item	Unit	Quantity	Unit Rate (INR)		Amount (INR)
				In Figures	In Words	
C	**Electrical Installation**					
99	Providing, fixing PTZ CAMERA Hikvision/samsung techwin make) Samsung speed dome 27X PTZ Camera including 3 year maintance as directed byf Engineer-incharge and specifications as required including carriage of material in all lead & lifts through mechanical & manual transport. Samsung or its equivalent.	Each	6.00			
100	Providing and fixing Everfocus 16 Channel DVR (Hikvision / samsung techwin make) Video Compression H.264, analog Video input 16-ch PAL/NTSC Adaptive Support, Video input interface BNC(1.0Vp-p, 75Ω), Audio Compression G.711, Audio input 1-ch, Audio, Two way audio 1 -ch RCA (2.0Vp-p, 1KΩ , input interface RCA (2.0 vp-p,1KΩ) including three year maintance and as per direction of Engineer-incharge and specifications as required including carriage of material in all lead and lifts through mechanical and manual transport.	Each	3.00			
101	Providing Power Supply ISI MARK including 3 year maintainance and as per direction of Engineer-incharge and specifications as required including carriage of material in all lead and lifts through mechanical and manual transport.	Each	15.00			
102	Providing BNC connector including 3 year maintance & as per direction of Engineer-incharge and specifications as required including carriage of material in all lead and lifts through mechanical and manual transport.	Each	150.00			
103	Providing DC Connector including three year maintance and as per direction of Engineer-incharge and specifications as required including carriage of material in all lead and lifts through mechanical and manual transport.	Each	150.00			
104	Providing and fixinng LED SCREEN 32" INCH (81.28cm) (samsung /sony make) including three year maintance and as per direction of Engineer-incharge and specifications as required including carriage of material in all lead and lifts through mechanical and manual transport.	Each	2.00			

Annexure - C

Sl. No.	Description of Item	Unit	Quantity	Unit Rate (INR)		Amount (INR)
				In Figures	In Words	
C	**Electrical Installation**					
105	Providing and fixing copper wiring for fixing of cameras in the existing PVC conduit etc as per requirement & three year maintance and as per direction of Engineer-incharge and specifications as required including carriage of material in all lead and lifts through mechanical and manual transport.	Rmt	450.00			
106	Providing and fixing of 25mm diameter, PVC conduit pipe along with the acessaries in surface /recessed including jointing, cutting or cutting in wall and making good the same incase of recessed conduit as per requirement including junction box and all other accessaries complete Engineer-incharge and specifications as required including carriage of material in all lead and lifts through mechanical and manual transport.	Rmt	450.00			
107	Providing 2 TB hard Drive for DVR and connecting it to main system for storage all complete (Seagate/ Sony)	Each	2.00			
	EPBAX					
108	Providing commissioning and testing Digital EPABX matrix model ETERNITY GE 12 S expandable 96 ext 56 ext analog. Samsung or its equivalent.	each	1.00			
109	Providing commissioning and testing 8 nos co port 01 op console beetal cli phone	each	2.00			
110	Providing commissioning and testing mdf with ipm	each	6.00			
111	Providing commissioning and testing ups with battery with 4 hour back up	each	1.00			
112	Providing commissioning and testing Telephone instruments including carriage of material.	each	30.00			

Annexure - C

Sl. No.	Description of Item	Unit	Quantity	Unit Rate (INR)		Amount (INR)
				In Figures	In Words	
C	**Electrical Installation**					
	ELEVATOR / LIFT					
113	Supplying, Installation, Testing and Commissioning (SITC) of lift for vertical circulation (8 Nos. passenger with 2-3 stoppages), as per HP Lift act 2007 with lift car size 1860mm (W)X 1860mm (D) X2139mm (H) stainless steel make of SCHINDLEER/ OTIS/JONSAN/THYSEEN CROPP/, Model No 3300IN or equivalent, fully automatic, gearless and machine room less with pit depth of 1500mm for each as per code detail code IS norms & BOCW Rules 1998 with one year AMC as per drawing,design specifications and direction of Engineer in charge including carriage of materials upto all leads and lifts.	Each	1.00			
	Sub-Total (C – Electrical Installation)					
D	**Total (A+B+C)**					
E	**Provisional Sum**	-	-	12,00,000.00	Rupees Twelve Lakhs only	12,00,000.00
F	**Total (D+E)**					

The comparison of bid shall be done exclusive of provisional sum

Blank Page